20-10117AC

TRIUMPH

REPLACEMENT PARTS CATALOG

1982 MODELS

BONNEVILLE T140 E2S

BONNEVILLE T140 LE ROYAL

BONNEVILLE T140 EX EXECUTIVE

Published April 1982

Publication Part 99-7507A

British Only

MOTORCYCLES AND PARTS INC.
32451 PARK LANE
GARDEN CITY, MI 48135 USA

PHONE ORDER HOURS:
MONDAY THRU FRIDAY 10-6 EST

Fax or email 24 hours a day!

CALL FOR OUR FREE 272 PAGE CATALOG!

OVERSEAS CUSTOMERS PLEASE SEND $10.00 FOR AIR POST

1-800-BRT-ONLY

OR

1-800-278-6659

Visit our website!

www.britishonly.com

50,000+ PARTS LISTED ONLINE
9,000+ PARTS VIEWABLE ONLINE

RETAIL: 734-421-0303
WHOLESALE: 734-525-1980
FAX: 734-422-9253
EMAIL: info@britishonly.com
WEBSITE: www.britishonly.com

- HYDE
- AMAL
- LUCAS
- SMITHS
- ROWE
- HEPOLITE
- MORGO
- DUNLOP
- RENOLD
- MEGACYCLE
- JOE HUNT
- BOOKSTORE
- NORVIL
- MORGO
- BARNETT
- JP PISTONS
- ALPHA

SPECIALIZING IN

TRIUMPH

Norton

BSA

THE BIGGEST!

ENGINE REBUILDING PARTS
GASKETS-SEALS-BEARINGS
BUSHINGS-PISTONS-RINGS
CLUTCHES-TUNE UP PARTS
SPEED EQUIPMENT

THE BEST!

STOCK AND CUSTOM PARTS
SEATS-HANDLEBARS-CHAINS
TIRES-TUBES-EXHAUST PIPES
MUFFLERS-GAS TANKS-FENDERS
RESTORATION PARTS

THE ONLY!

PARTS SHIPPED WORLDWIDE!

MasterCard · American Express Cards · NOVUS · VISA

WORLDS LARGEST SELECTION OF FACTORY ORIGINAL NEW AND USED PARTS
45,000 SQ. FT. OF MOTORCYCLE PARTS & ACCESSORIES FROM 1911 TO 1984 FOR ALL BRITISH MAKES!
CASH FOR ALL BRITISH BIKES, PARTS AND LITERATURE

V.I.P. Buyers Club

SAVE 10% OR MORE ON 17,000+ PARTS

British Only ***E-Store***

Bookstore
New Products
Scratch & Dent
Blue Light Specials

50,000+ PARTS LISTED ONLINE
9,000+ PARTS VIEWABLE ONLINE

British Only

MOTORCYCLES AND PARTS INC.
32451 PARK LANE
GARDEN CITY, MI 48135 USA

PHONE ORDER HOURS:
MONDAY THRU FRIDAY 10-6 EST

Fax or email 24 hours a day!

CALL FOR OUR FREE 272 PAGE CATALOG!
OVERSEAS CUSTOMERS PLEASE SEND $10.00 FOR AIR POST

1-800-BRT-ONLY
OR
1-800-278-6659

Visit our website!
www.britishonly.com

50,000+ PARTS LISTED ONLINE
9,000+ PARTS VIEWABLE ONLINE

RETAIL: 734-421-0303
WHOLESALE: 734-525-1980
FAX: 734-422-9253
EMAIL: info@britishonly.com
WEBSITE: www.britishonly.com

— HYDE
— AMAL
— LUCAS
— SMITHS
— ROWE
— HEPOLITE
— MORGO
— DUNLOP
— RENOLD
— MEGACYCLE
— JOE HUNT
— BOOKSTORE
— NORVIL
— MORGO
— BARNETT
— JP PISTONS
— ALPHA

SPECIALIZING IN

TRIUMPH
Norton
BSA

THE BIGGEST!

ENGINE REBUILDING PARTS
GASKETS-SEALS-BEARINGS
BUSHINGS-PISTONS-RINGS
CLUTCHES-TUNE UP PARTS
SPEED EQUIPMENT

THE BEST!

STOCK AND CUSTOM PARTS
SEATS-HANDLEBARS-CHAINS
TIRES-TUBES-EXHAUST PIPES
MUFFLERS-GAS TANKS-FENDERS
RESTORATION PARTS

THE ONLY!

PARTS SHIPPED WORLDWIDE!

MasterCard · American Express Cards · NOVUS · VISA

WORLDS LARGEST SELECTION OF FACTORY ORIGINAL NEW AND USED PARTS
45,000 SQ. FT. OF MOTORCYCLE PARTS & ACCESSORIES FROM 1911 TO 1984 FOR ALL BRITISH MAKES!
CASH FOR ALL BRITISH BIKES, PARTS AND LITERATURE

V.I.P. Buyers Club
SAVE 10% OR MORE ON 17,000+ PARTS

British Only ***E-Store***
Bookstore
New Products
Scratch & Dent
Blue Light Specials

50,000+ PARTS LISTED ONLINE
9,000+ PARTS VIEWABLE ONLINE

INTRODUCTION

ENGINE AND FRAME NUMBERS

The engine number is located on the left side of the engine, immediately below the cylinder barrel to crankcase flange.

The frame number is located on the left side of the frame headlug, beneath the fork top lug and forward of the gasoline tank.

Both the engine and frame number should be quoted in full in any correspondence relating to the machine.

INDEX

	Page
Air Cleaner	71
Amplifier Unit	85
Battery	87
Battery Carrier	87
Breather Pipes	49
Caliper	63
Camshaft, Inlet & Exhaust	9
Carburetor	23,25
Center Stand	43
Chains	39
Chaincase	39
Clutch	37
Clutch Lever Assy	77
Coil & Tool Tray Assy	85
Connecting Rods	9,11
Control Cables	79
Control Levers	77
Crankcase	13,15
Crankshaft	9,11
Cylinders	19,21
Cylinder Head	19,21
Exhaust Pipes	41
Executive Equipment	90
Fenders	73
Flasher Lamps	87
Flywheel	9
Footrests	47
Frame	43
Front Brake	57,59
Front Forks	51,53
Front Wheel	55
Fuel Valve	69
Gasket Sets	21
Gas Tank	69
Gearbox Inner Cover	31
Gearbox Shafts & Gears	33
Gearbox Outer Cover	35
Grab Rail	77
Handlebar	77
Headlamp	87
High Tension Cable	85
Horn	85
Ignition Switch	87
Ignition Coils	85
Ignition Amplifier	85
Kickstarter	35
Master Cylinder - Front	57,59
Master Cylinder - Rear	63
Motor Mount Plates	47
Motor Unit Fittings	47
Neutral Switch	31
Oil Pump	17
Oil Pipes	49
Oil Pressure Release Valve	17
Pistons, Oversize & Ring Sets	11
Pistons	9
Pulse Sensor	27,29
Push Rods	19,21
Petrol Pipe	22
Rear Brake	63,65
Rear Wheel	61
Rectifier	85
Reflector	85
Reservoir, Master Cyl. Rear	65
Rocker Arms	19,21
Seat	67
Side Panels	71
Side Stand	43
Silencer (Muffler)	44
Solenoid	89

INDEX

	Page
Spark Plug	85
Speedometer	83
Speedo Gearbox	61
Suspension Units	45
Swinging Arm	45
Switches	77
Service Tools	7
Tachometer (Gearbox)	83
Tail Light Assy	75
Tappets	19,21
Timing Cover	27,29
Timing Gears	9
Toolkit	81

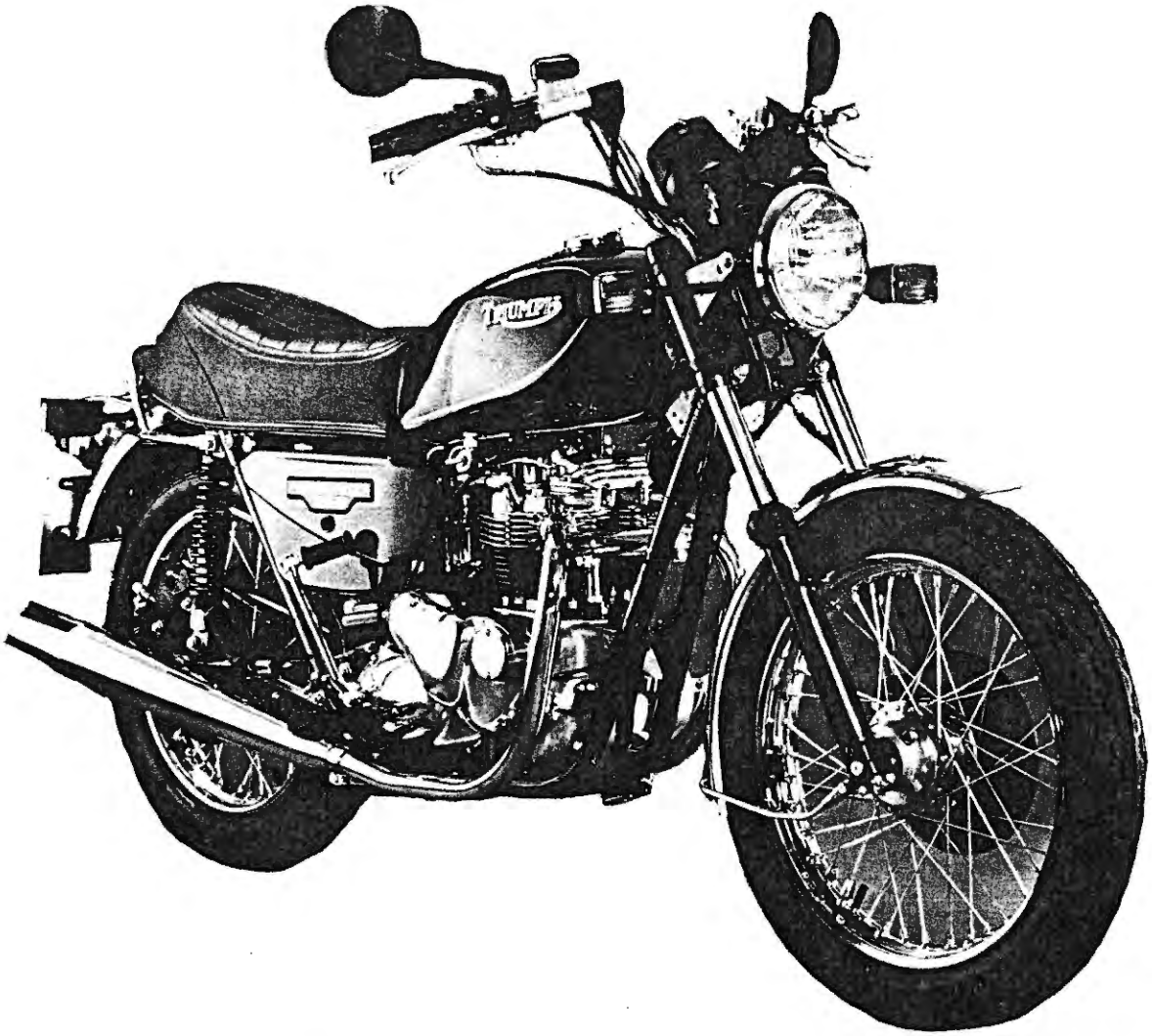

BONNEVILLE (T140E2S) TECHNICAL DATA

Bore & Stroke		76x82mm/2.992x3.228ins.
Capacity		747cc/45 cu. ins.
Compression Ratio		7.9:1
Spark Plugs		Champion N5
Carburetor		Bing Constant Velocity
	Main Jet	145
	Needle Jet	2,64
	Needle	#1
	Throttle Valve	#3
Gearbox Sprocket		20 Teeth
Chains	Front	Triplex 3/8 in. x 84 links
	Rear	5/8 in. x 3/8 in x 106 links
Capacities	Fuel Tank	4.8 U.S. Gal.
	Oil Tank	4 Pints
	Gearbox	7/8 Pint (500cc)
	Front Forks	1/3 Pint (190cc)
Tyre Size	Front	4.10 x 19
	Rear	4.25 x 18
Colors		Smokey Misty Red
		Smokey Astral Blue

BONNEVILLE ROYAL (T140LE) TECHNICAL DATA

Bore & Stroke		76x82mm/2.992x3.228 ins.
Capacity		747cc/45 cu. ins.
Compression Ratio		7.9:1
Spark Plugs		Champion N5
Carburetor		Bing Constant Velocity
	Main Jet	145
	Needle Jet	2,64
	Needle	#1
	Throttle Valve	#3
Gearbox Sprocket		20 Teeth
Chains	Front	Triplex 3/8 in. x 84 links
	Rear	5/8 in. x 3/8 in. x 106 links
Capacities	Fuel Tank	4.8 U.S. Gal.
	Oil Tank	4 Pints
	Gearbox	7/8 Pint (500cc)
	Front Forks	1/3 Pint (190cc)
Tyre Size	Front	4.10 x 19
	Rear	4.25 x 18
Color		Black/Gold Line

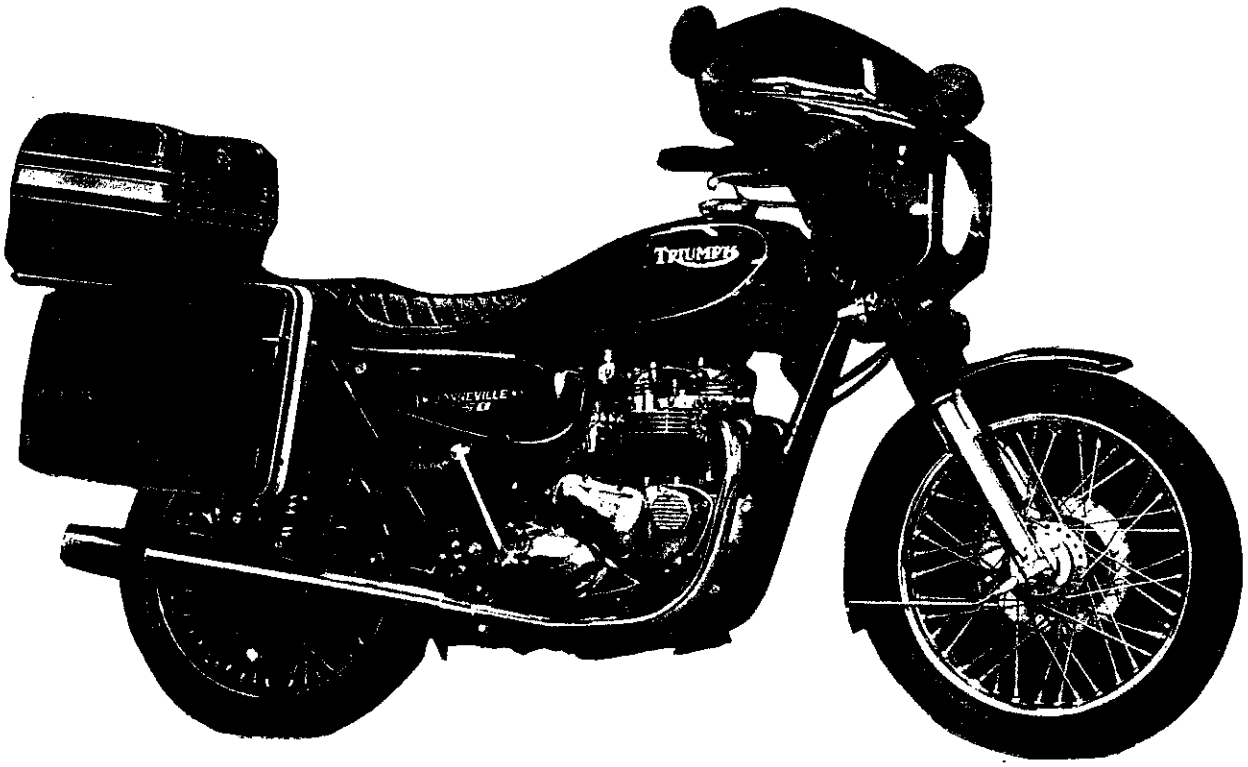

BONNEVILLE EXECUTIVE (T140EX) TECHNICAL DATA

Bore & Stroke		76x82mm/2.992x3.228 ins.
Capacity		747cc/45 cu. ins.
Compression Ratio		7.9:1
Spark Plugs		Champion N5
Carburetor		Bing Constant Velocity
	Main Jet	145
	Needle Jet	2,64
	Needle	#1
	Throttle Valve	#3
Gearbox Sprocket		20 Teeth
Chains	Front	Triplex 3/8 in. x 84 links
	Rear	5/8 in. x 3/8 in. x 106 links
Capacities	Fuel Tank	4.8 U.S. Gal.
	Oil Tank	4 Pints
	Gearbox	7/8 Pint (500cc)
	Front Forks	1/3 Pint (190cc)
Tyre Size	Front	4.10 x 19
	Rear	4.25 x 18
Color		Smokey Candy Apple Red

HOW TO USE THIS PARTS CATALOGUE

First Consult the index on Page for the parts or group of parts which you wish to locate. When you have located the parts make sure from the end columns that the part you have located does apply to your machine.

List the quantities required as single units; do not ask for "2 pairs" or "3 dozen".

In case of painted items always state the colour required.

PLEASE NOTE

THROUGHOUT THIS LIST, ASSEMBLIES ARE PRINTED IN CAPITALS AND THE COMPONENTS INCLUDED IN THAT ASSEMBLY ARE INDENTED IN THE DESCRIPTION COLUMN, REVERTING TO THE ORIGINAL ALIGNMENT WHEN THE ASSEMBLY IS COMPLETE. TO ORDER THE COMPLETE ASSEMBLY IT IS NECESSARY ONLY TO QUOTE THE ASSEMBLY NUMBER. ANY COMPONENT PARTS LISTED MAY ALSO BE OBTAINED SEPARATELY IF REQUIRED. WHERE COMPONENTS ARE COMMON TO ALL MODELS ONLY ONE COLUMN APPEARS UNDER QUANTITY.

SPECIAL WORKSHOP TOOLS

A COMPLETE LIST OF WORKSHOP TOOLS CAN BE MADE AVAILABLE BY CONTACTING YOUR DEALER. IN MOST CASES THESE TOOLS ARE VERY COSTLY AS THEY ARE MADE ENTIRELY FOR WORKSHOP USE, AND THEREFORE, IT IS NOT RECOMMENDED THAT THE PRIVATE OWNER PURCHASE THE TOOLS IN ORDER TO AID SERVICING THE MACHINE ONCE OR TWICE ONLY. IN THESE CIRCUMSTANCES IT IS FAR MORE ECONOMICAL TO GET IN TOUCH WITH A RECOGNISED DEALER.

ESSENTIAL SERVICE TOOLS

Part No.	Description
61-3768	Clutch Locking Tool
61-6008	Punch, Tappet Guide Block
61-6019	Extractor, Pinion C/Shaft
61-6063	Removal/Replacement Tool, Valve Guide
61-6113	Fork Damper Tool
61-6117	Bush Extractor, S/Arm
61-6121	Head Race Drift
61-6125	Spanner, G/Box
61-6132	Extractor, Cam Wheel
61-6135	Piston Ring Clamp
61-7010	Torque Tool Adaptor
61-7011	Gearbox Assy Tool
61-7012	Chain Adjuster Tool
61-7013	Oil Seal Compressor
61-7014	Extractor Tool, Clutch Hub
61-7017	Extractor, M/Brg.
61-7019	Oil Seal Compressor
61-7022	Locator Tool Assy TDC
61-7023	Cam Extractor 6CA
61-7024	Peg Spanner
61-7025	Valve Seat Cutter
61-7027	Blending Cutter
61-7029	Arbor, Pilot & Tommy Bars
61-7035	Crankshaft Bal. Weights (689 grams)
61-7043	Cam Wheel Replacement Tool

PUBLICATIONS AVAILABLE

Owner Handbook

60-7396

Workshop Manual

99-0983A

Replacement Parts Catalog

99-7507A

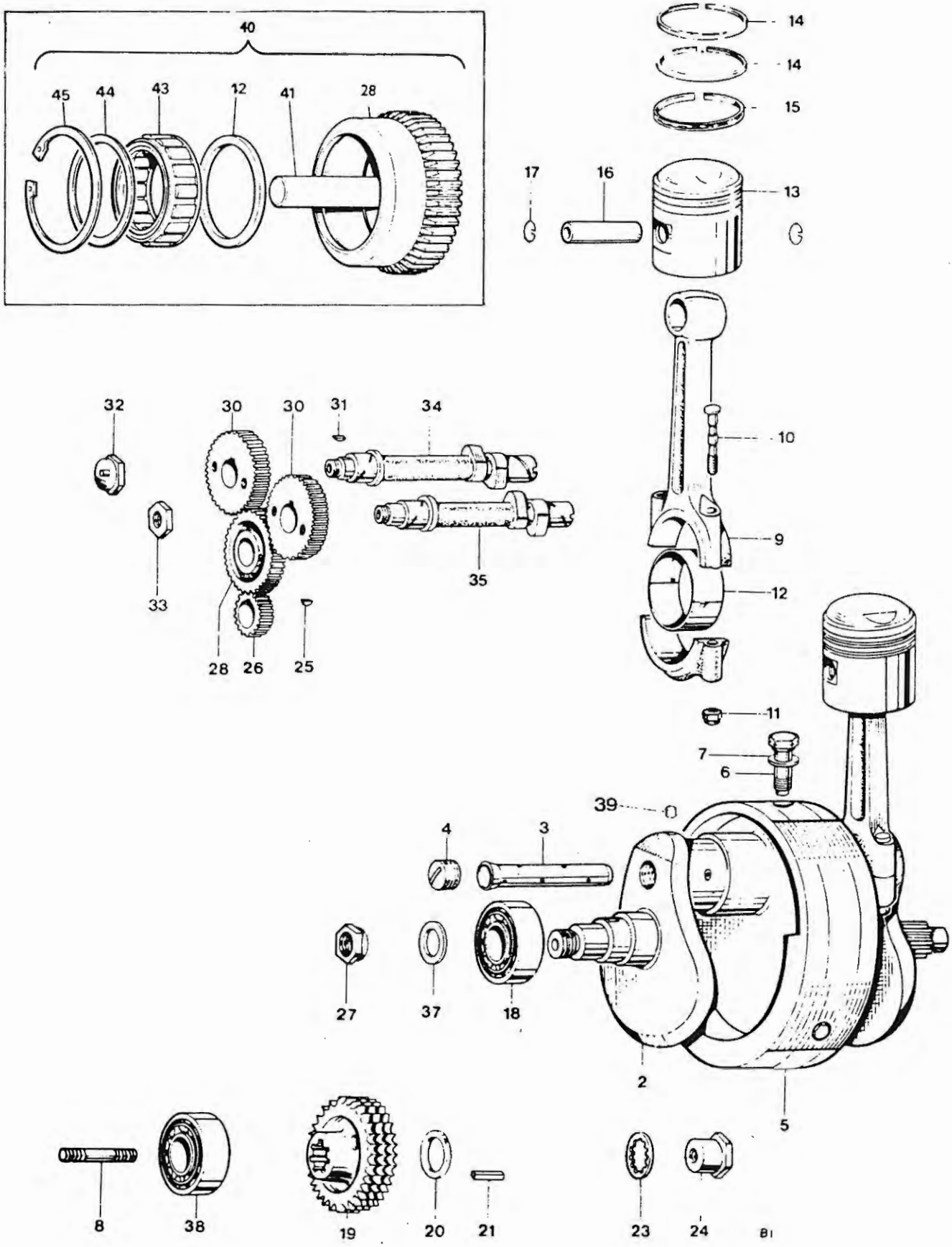

CRANKSHAFT AND CONNECTING RODS

CRANKSHAFT AND CONNECTING RODS

Ref. No.	Part No.	Description	T140 E2S Qty	LE Req	EX
-	71-7370	CRANKSHAFT AND FLYWHEEL ASSEMBLY	1	1	1
2	71-3298	Crankshaft c/w oil tube	1	1	1
3	70-3903	Oil tube	1	1	1
4	71-2800	Screwed plug	1	1	1
5	71-7338	Flywheel	1	1	1
6	71-3552	Flywheel bolt	3	3	3
7	71-1003	Washer	3	3	3
8	21-2183	Crankshaft stud	1	1	1
9	71-3006	CONNECTING ROD ASSEMBLY	2	2	2
10	70-9914	Connecting rod bolt	4	4	4
11	21-7091	Connecting rod nut	4	4	4
NI	99-7040	BIG END BEARING ASSEMBLY	1	1	1
12	70-3586	Big end bearing	2pr	2pr	2pr
13	71-3778A	PISTON ASSEMBLY (7.9:1) c/w rings, clips & pin	2	2	2
13	71-7085	PISTON ASSEMBLY (7.4:1) c/w rings, clips & pin	A	A	A
NI	99-3789	PISTON RING ASSEMBLY	1	1	1
14	71-3690	Compression ring	4	4	4
15	71-3695	Oil ring	2	2	2
16	71-3354	Gudgeon pin	2	2	2
17	71-3700	Circlip	4	4	4
18	60-7362	Main bearing double lipped roller R/H	1	1	1
19	71-3542	Engine sprocket 29 teeth	1	1	1
20	71-3544	Spacer, engine sprocket	1	1	1
21	71-0082	Key, rotor	1	1	1
23	21-7024	Lock washer	1	1	1
24	21-2182	Nut, rotor to crankshaft	1	1	1
25	70-1580	Key, timing pinion	1	1	1
26	71-7617	Timing pinion	1	1	1
27	71-2877	Nut, timing pinion	1	1	1
28	71-7246	INTERMEDIATE WHEEL C/W SPINDLE	1	1	1
30	71-3666	Camshaft pinion	2	2	2
31	70-1558	Key, camshaft	2	2	2
32	71-1007	Nut, inlet camshaft	1	1	1
33	70-6523	Nut, exhaust camshaft	1	1	1
34	71-7016	Camshaft, inlet	1	1	1
35	71-7017	Camshaft, exhaust	1	1	1
37	70-3300	Washer, timing pinion	1	1	1
38	70-2879	Main bearing single lipped roller	1	1	1
39	70-3902	Plug, crankshaft oilway	1	1	1
NI	71-2663	Spacer	1	1	1
NI	70-8038	Shim (.010) engine sprocket	AR	AR	AR
NI	71-2660	Shim (.030) engine sprocket	AR	AR	AR
40	71-7526	SPRAG CLUTCH ASSY. C/W WHEEL & SPINDLE	1	1	1
41	71-7413	Spindle	1	1	1
42	71-7245	Spacer ring - inner	1	1	1

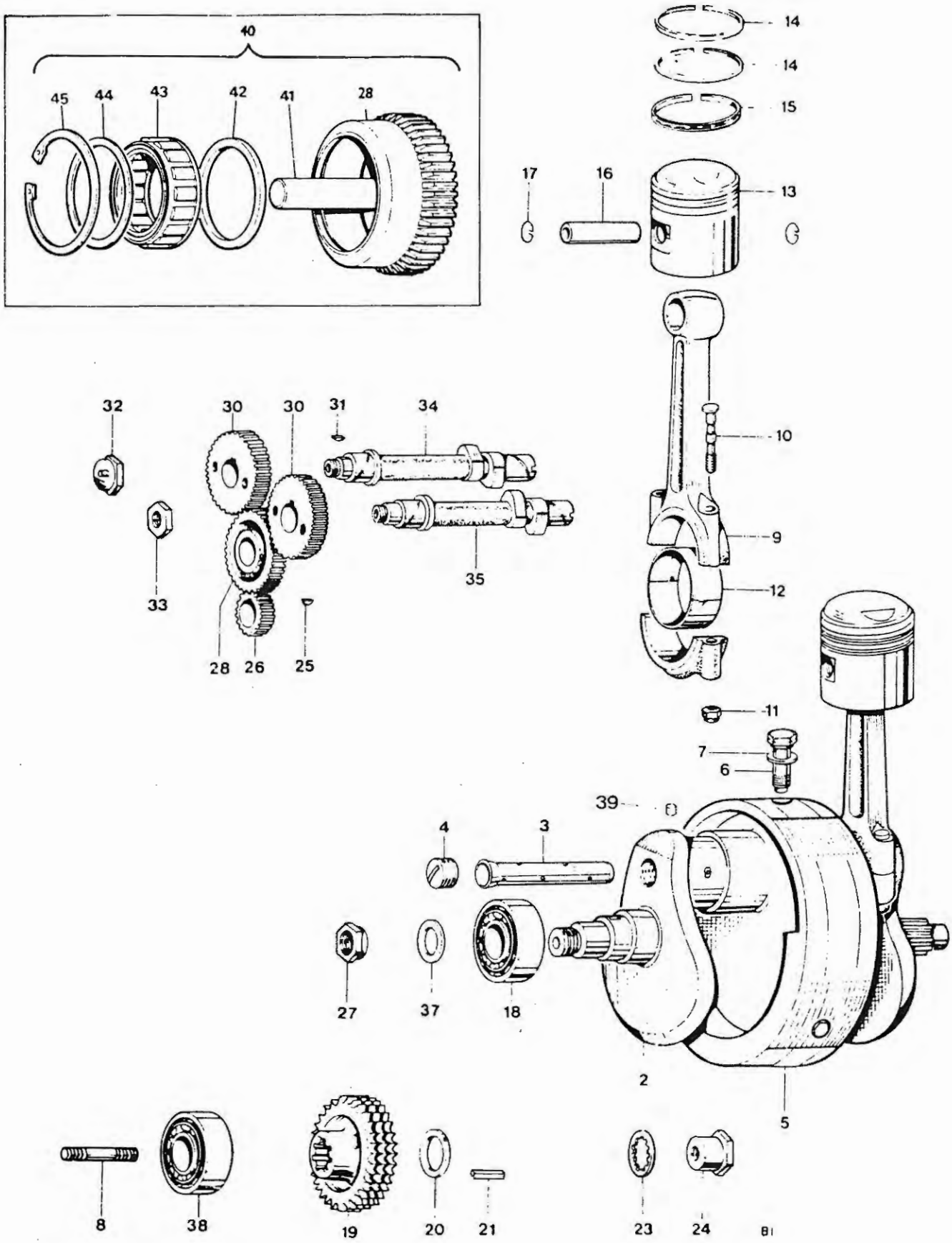

CRANKSHAFT AND CONNECTING RODS

CRANKSHAFT AND CONNECTING RODS (CONT.)

Ref No.	Part No.	Description	T140 E2S Qty	T140 LE Req	T140 EX
43	60-7291	Sprag clutch	1	1	1
44	71-7244	Retainer ring-outer	1	1	1
45	60-7269	Circlip	1	1	1
		CARTON PACK ASSEMBLIES			
	PISTONS: (C/W RINGS, PIN & CIRCLIPS)				
	71-3995	Piston Assy. 7.9:1 + .010	2	2	2
	71-3996	Piston Assy. 7.9:1 + .020	2	2	2
	71-7090	Piston Assy. 7.4:1 + .010	2	2	2
	71-7091	Piston Assy. 7.4:1 + .020	2	2	2
	PISTON RING SETS (4 COMPRESSION & 2 OIL)				
	99-3790	Ring Set + .010	1	1	1
	71-3691	Ring Compression + .010	4	4	4
	71-3696	Ring Oil + .010	2	2	2
	99-3791	Ring Set + .020	1	1	1
	71-3692	Ring Compression + .020	4	4	4
	71-3697	Ring Oil + .020	2	2	2
	BIG END BEARING SETS (Connecting Rod)				
	99-7041	Bearing Set - .010	1	1	1
	70-3586010	Bearing - .010	2pr	2pr	2pr
	99-7042	Bearing set - .020	1	1	1
	70-3586020	Bearing - .020	2pr	2pr	2pr

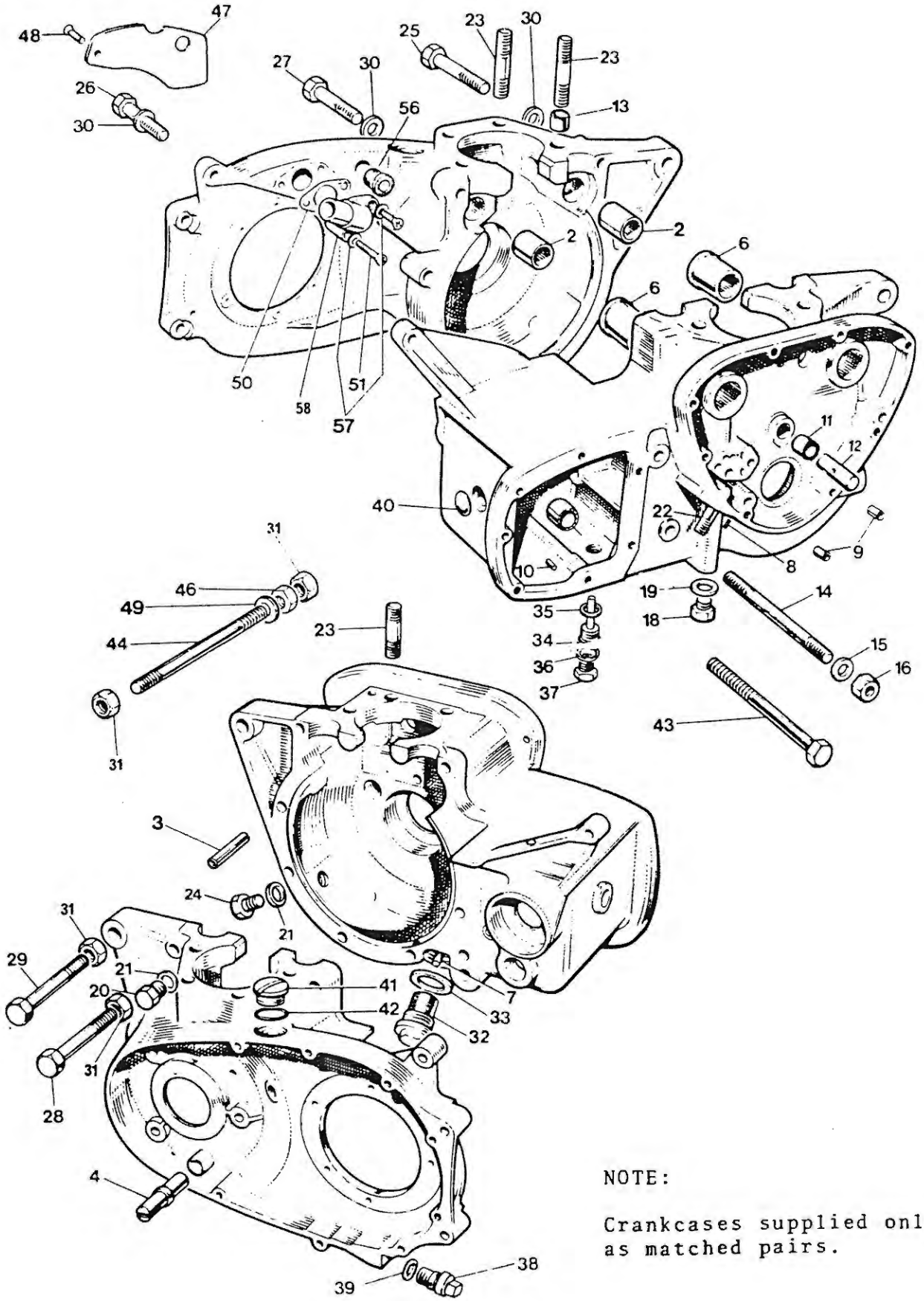

NOTE:

Crankcases supplied only as matched pairs.

CRANKCASE

CRANKCASE

Ref. No.	Part No.	Description	T140 E2S Qty	LE Req	EX
-	71-7491	CRANKCASE ASSEMBLY (paired)	1		1
-	71-7604	CRANKCASE ASSEMBLY (paired) BLACK		1	
2	71-0287	Bush, camshaft L/H	2	2	2
3	71-3989	Dowel, crankcase joint	1	1	1
4	71-7258	Pin, pivot chain tensioner	1	1	1
6	71-0286	Bush, camshaft R/H	2	2	2
7	70-4538	Scavenge pipe, crankcase	1	1	1
8	70-6386	Peg, locating oil junction block	1	1	1
9	57-0989	Dowel, timing cover	2	2	2
10	57-0912	Peg, locating (L/S at thrust washer)	1	1	1
11	71-7492	Bush, intermediate wheel spindle	1	1	1
12	71-7413	Spindle, intermediate wheel	1	1	1
13	70-8751	Dowel, cylinder base L/H	2	2	2
14	14-1445	Stud, crankcase rear	1	1	1
15	60-4246	Washer, plain crankcase	2	2	2
16	14-1303	Nut, crankcase	1	1	1
17	57-1606	Bearing needle, layshaft	1	1	1
18	70-9330	Plug, oilway R/H crankcase	1	1	1
19	82-1880	Washer, copper oilway plug	1	1	1
20	21-1871	Plug, tach. drive (L/H thread)	1	1	1
21	37-3761	O'Ring, ign. timing hole plug	1	1	1
22	21-1863	Stud, oil pipe	1	1	1
23	21-1865	Stud, cylinder inner	4	4	4
23	71-3013	Stud, cylinder outer	4	4	4
24	71-1872	Plug, ign. timing	1	1	1
25	21-1870	Bolt, rear crankcase	1	1	1
26	14-6220	Bolt, top rear crankcase	1	1	1
27	14-6223	Bolt, top front crankcase	1	1	1
28	14-0230	Bolt, long crankcase	1	1	1
29	21-1823	Bolt, short crankcase	2	2	2
30	60-2330	Washer, plain crankcase	10	10	10
31	14-1302	Nut, crankcase	5	5	5
32	70-9336	Filter, crankcase	1	1	1
33	70-8782	O'Ring, crankcase filter	1	1	1
34	57-2167	Plug, drain (w/level tube)	1	1	1
35	60-7132	Washer, drain plug	1	1	1
36	70-2441	Washer, level plug	1	1	1
37	21-0543	Plug, level	1	1	1
38	71-7259	Plug, chain adjuster	1	1	1
39	70-6299	O'Ring, chain adjuster plug	1	1	1
40	57-1920	Plug, blanking crankcase	1	1	1
41	57-2166	Plug, inspection primary chain	1	1	1
42	70-8782	O'Ring, inspection plug	1	1	1
43	14-6242	Bolt, rear crankcase	1	1	1
44	21-0669	Stud, crankcase	1	1	1
46	14-0402	Nut, exhaust ties	2	2	2
47	70-9334	Plate, breather cover assembly	1	1	1

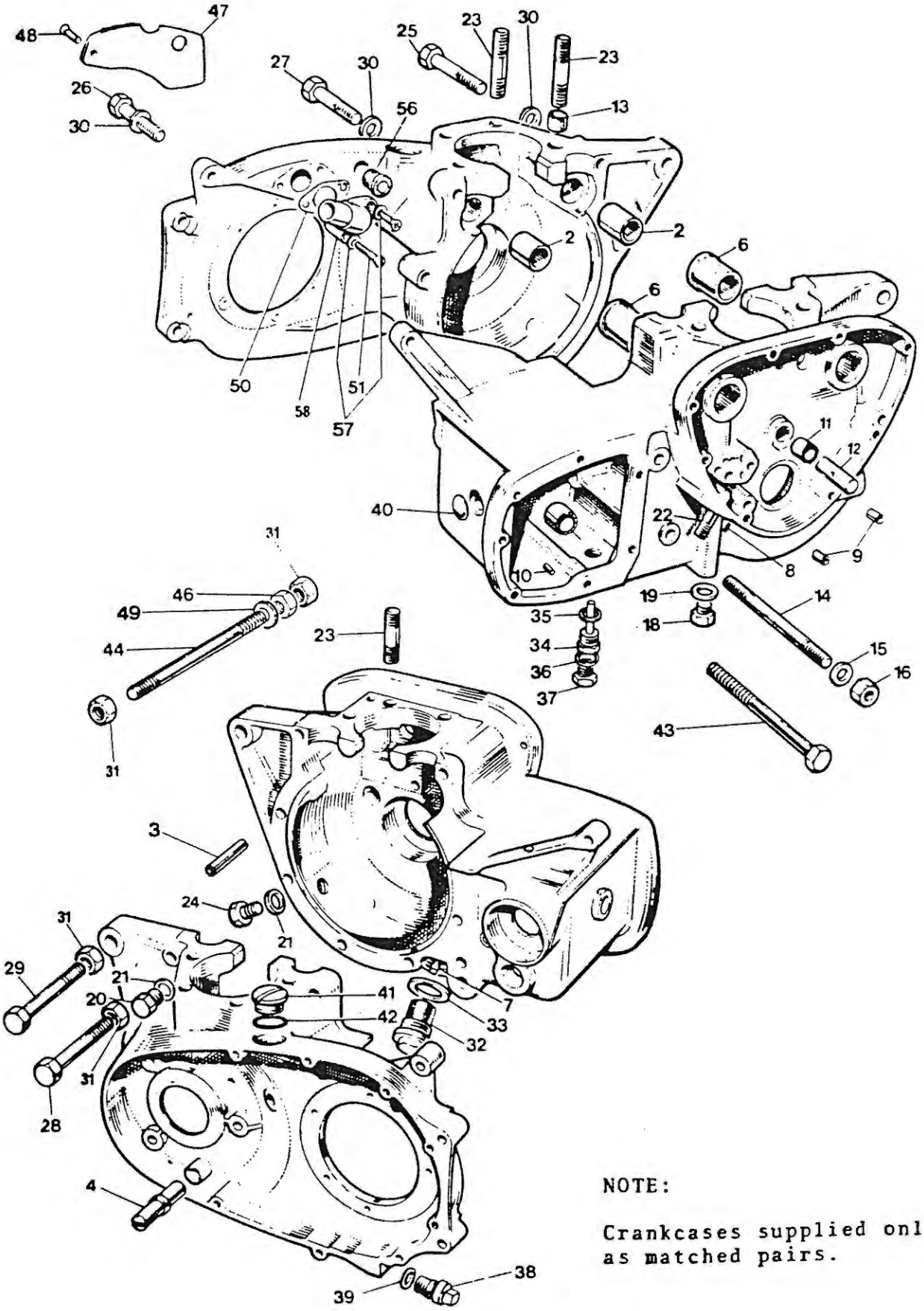

NOTE:

Crankcases supplied only as matched pairs.

CRANKCASE

CRANKCASE (CONT.)

Ref. No.	Part No.	Description	T140 E2S Qty Req	T140 LE Qty Req	T140 EX Qty Req
48	71-1077	Screw, breather plate cover	1	1	1
49	60-2428	Washer, crankcase stud	2	2	2
50	71-1460	Gasket, breather stub outlet	1	1	1
51	70-7354	Screw, breather stub outlet	2	2	2
56	71-1345	Grommet, stator leads - external	1	1	1
57	70-6559	Washer, breather stub outlet screw	2	2	2
58	71-4044	Stub, breather outlet	1	1	1

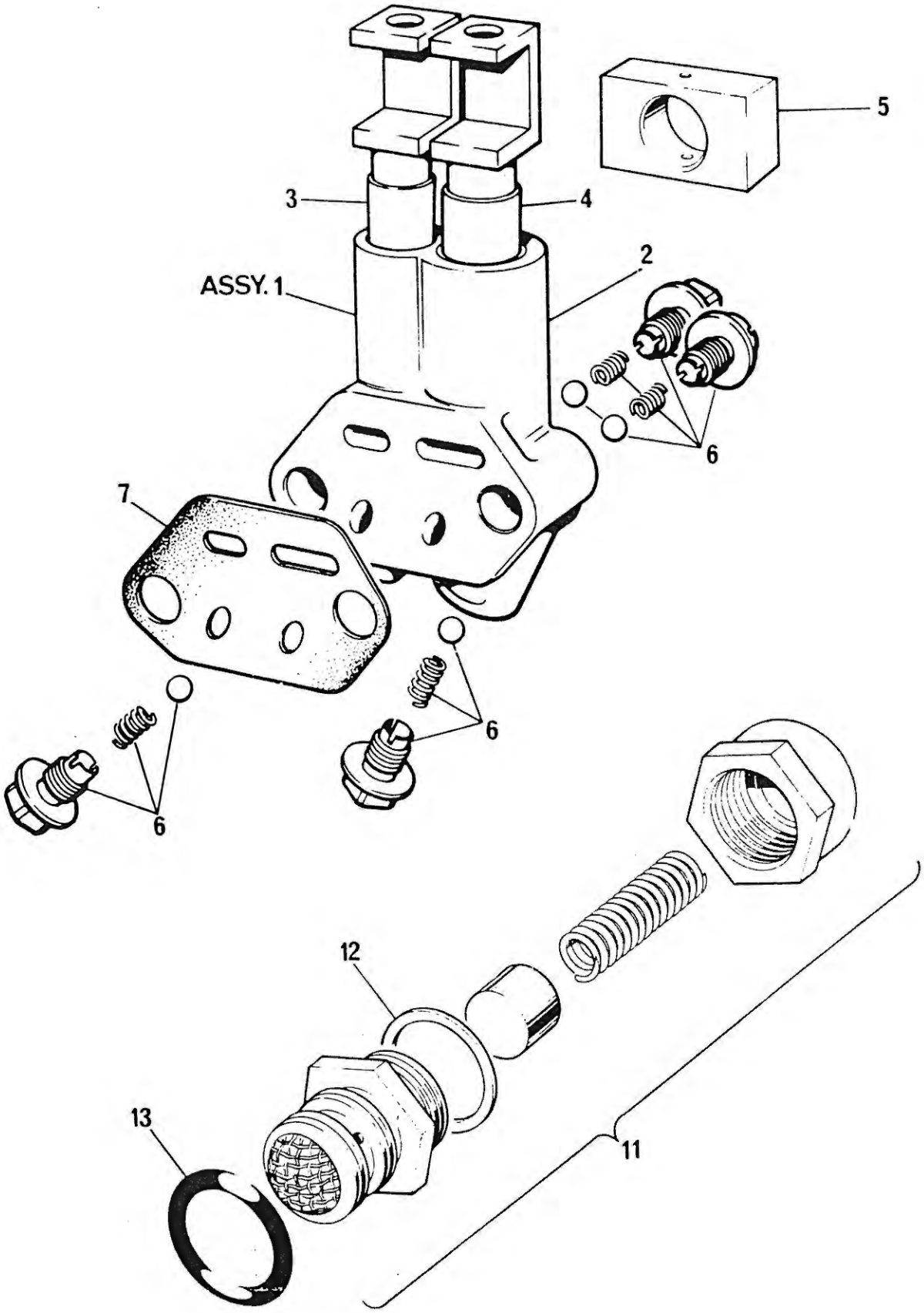

OIL PUMP AND RELEASE VALVE

OIL PUMP AND RELEASE VALVE

Ref. No.	Part No.	Description	T140 E2S Qty Req	LE	EX
1	71-7317	OIL PUMP ASSEMBLY	1	1	1
2	71-7253	Body, oil pump	1	1	1
3	70-9269	Plunger, feed oil pump	1	1	1
4	70-6681	Plunger, scavenger oil pump	1	1	1
5	70-0495	Block, oil pump drive	1	1	1
6	99-7508	Valve Pack, oil pump	1	1	1
7	71-3910	Gasket, oil pump	1	1	1
NI	14-7007	Screw, 1¼" oil pump fixing	1	1	1
NI	14-7008	Screw, 1½" oil pump fixing	1	1	1
NI	60-2417	Washer, oil pump fixing	2	2	2
11	71-3447	OIL PRESSURE RELEASE VALVE	1	1	1
12	70-8754	Washer (cap to body) release valve	1	1	1
13	60-3355	O'Ring, release valve body	1	1	1

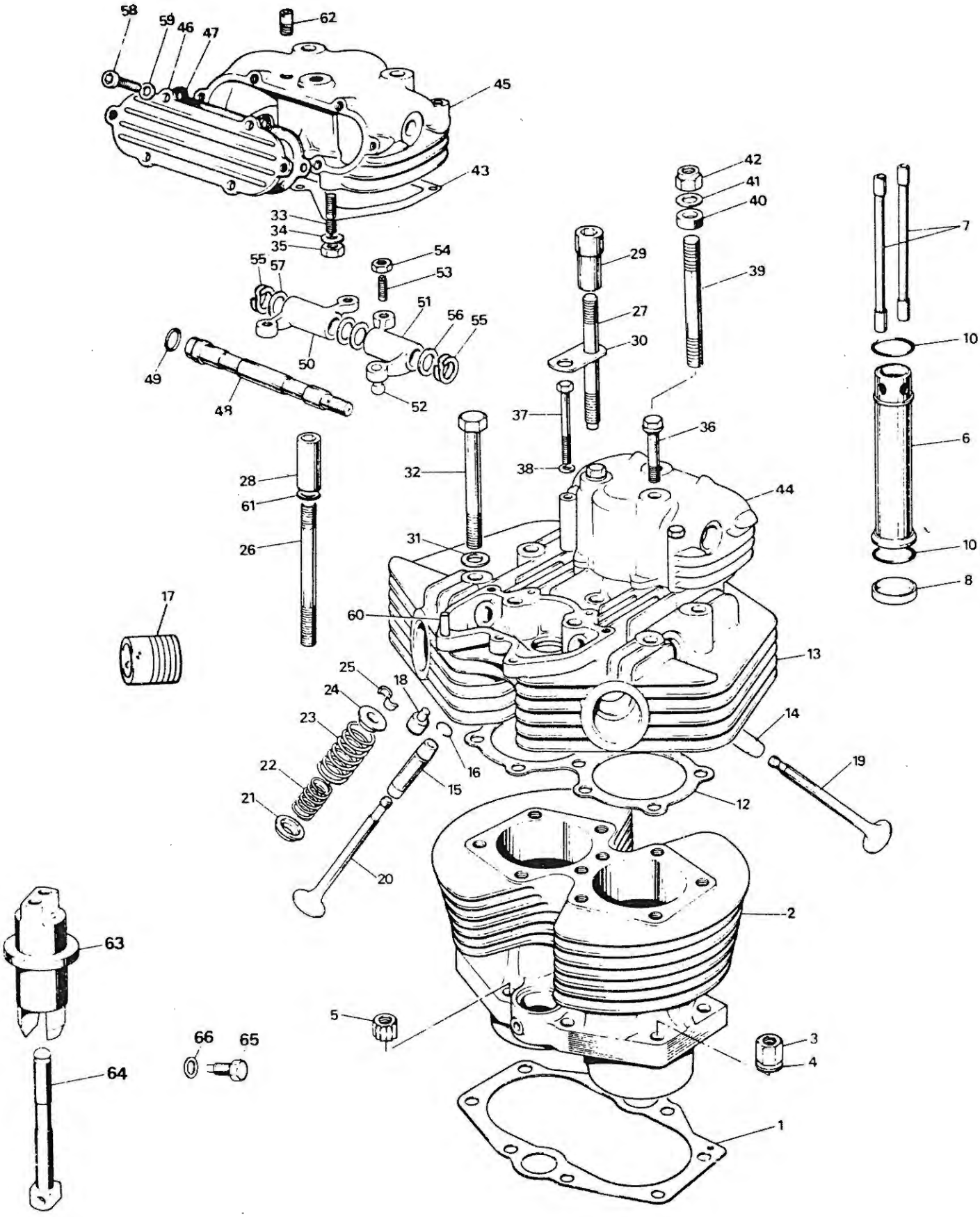

CYLINDER BLOCK AND HEAD

CYLINDER BLOCK AND CYLINDER HEAD ROCKER BOXES

Ref. No.	Part No.	Description	T140 E2S Qty Req	LE	EX
1	70-6309	Gasket, cylinder base	1	1	1
2	71-4006	Cylinder block	1	1	1
3	21-2177	Nut, cylinder base	4	4	4
4	70-3446	Washer, cylinder base	4	4	4
5	21-0692	Nut, cylinder base (12 point)	4	4	4
6	71-7191	Tube, push rod cover	2		2
6	71-7613	Tube, push rod cover (black)		2	
7	71-3330	Push rod	4	4	4
8	71-7196	Sleeve, push rod cover tube	2	2	2
10	71-1283	O'Ring, push rod cover tube	4	4	4
12	71-4619	Gasket, cylinder head	1	1	1
13	71-7530	CYLINDER HEAD ASSEMBLY	1		1
13	71-7607	CYLINDER HEAD ASSEMBLY - BLACK		1	
14	71-7506	Guide, valve inlet	2	2	2
15	71-7202	Guide, valve exhaust	2	2	2
16	70-3209	Circlip, valve guide inlet & exhaust	4	4	4
17	70-9516	Adaptor, exhaust pipe	2	2	2
18	60-7363	Seal, inlet valve guide	2	2	2
19	70-4603	Valve, inlet	2	2	2
20	70-2904	Valve, exhaust	2	2	2
21	71-7203	Cup, valve spring bottom	4	4	4
22	70-4221	Spring, valve inner	4	4	4
23	70-7400	Spring, valve outer	4	4	4
24	70-1543	Collar, valve spring top	4	4	4
25	71-3748	Split Cotter, inlet & exhaust valve	8	8	8
26	21-2201	Stud, cylinder head 3/8"	4	4	4
27	21-2200	Stud, cylinder head 5/16"	2	2	2
28	21-2204	Nut, socket cylinder head	4	4	4
29	21-2205	Nut, socket cylinder head	2	2	2
30	71-3553	Plate, bridge center studs	1	1	1
31	82-2184	Washer, cylinder head	4	4	4
32	14-0241	Bolt, cylinder head	4	4	4
33	14-1401	Stud, rocker box	6	6	6
34	70-3302	Washer, rocker box	6	6	6
35	14-0301	Nut, rocker box	6	6	6
36	21-2206	Bolt, rocker box	4	4	4
37	21-1875	Bolt, rocker box	4	4	4
38	60-4248	Washer, rocker box	4	4	4
39	21-2197	Stud, engine torque stay	2	2	2
40	37-2338	Spacer, engine torque stay	2	2	2
41	60-2331	Washer, engine torque stay	2	2	2
42	14-1303	Nut, engine torque stay	2	2	2
43	71-2599	Gasket, rocker box	2	2	2
44	71-3668	Rocker box, inlet	1		1
44	71-7596	Rocker box, inlet (black)		1	

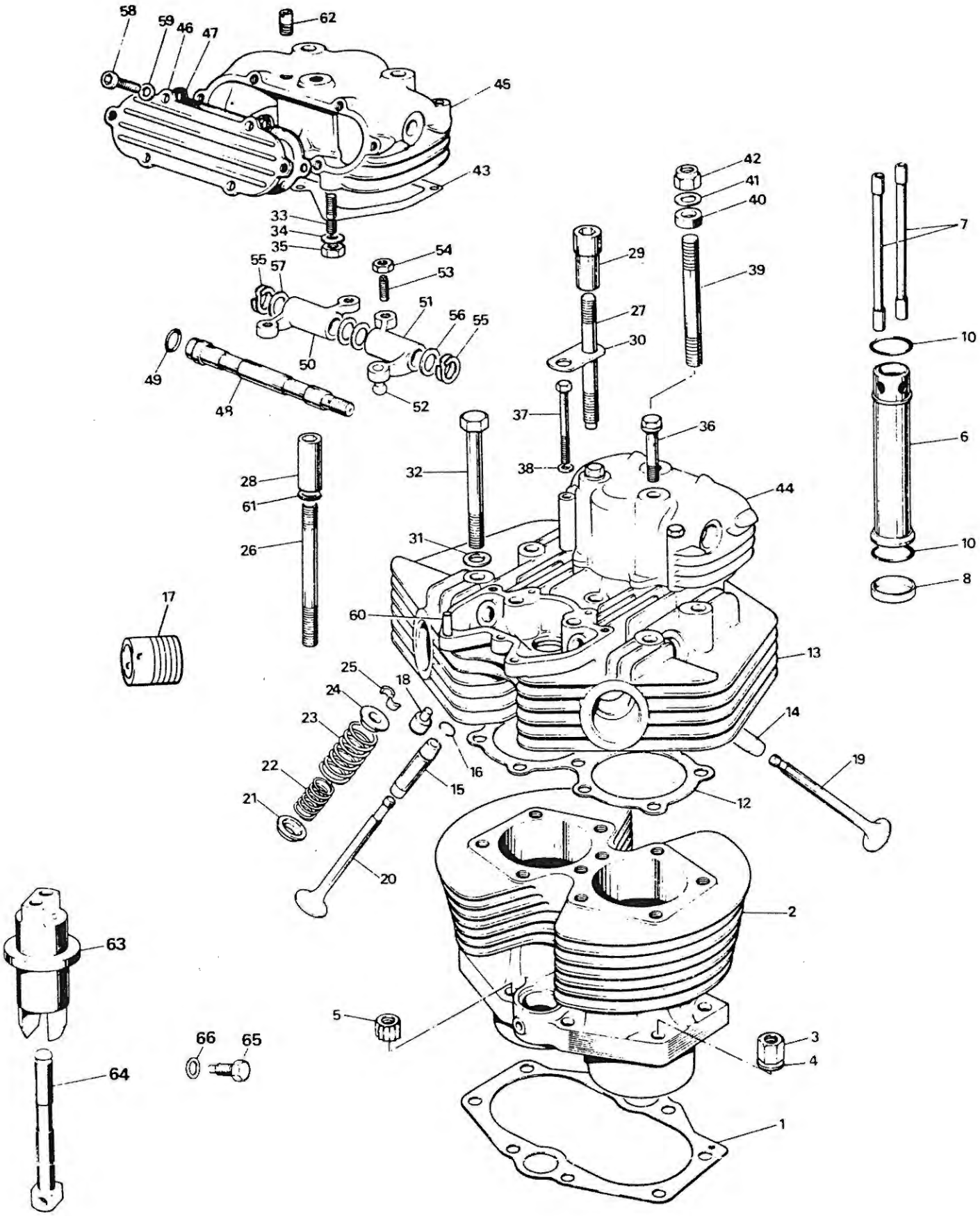

CYLINDER BLOCK AND HEAD

CARBURETOR

Ref. No.	Part No.	Description	T140 E2S Qty Req	LE	EX
NI	60-7418	Carburetor Assembly L/H	1	1	1
NI	60-7419	Carburetor Assembly R/H	1	1	1
1	99-7525	Main Jet 145cc	1	1	1
2	99-7526	Atomizer	1	1	1
3	99-7527	Needle Jet 2.64	1	1	1
4	99-7528	Jet Needle	1	1	1
5	99-7529	Idle Jet 45cc	1	1	1
6	99-7530	Washer	1	1	1
7		Mixture control screw	1	1	1
8	99-7531	Spring	1	1	1
9	99-7532	Rubber ring	1	1	1
10		Nozzle stock	1	1	1
11	99-7533	Rubber ring	1	1	1
12	99-7534	Washer	1	1	1
13	99-7535	Plunger No. 3	1	1	1
14	99-7536	Retaining spring	1	1	1
15	99-7537	Washer	1	1	1
16	99-7538	Diaphram	1	1	1
17		Retaining ring	1	1	1
18	99-7539	Screw	4	4	4
19	99-7540	Washer	4	4	4
20		Plunger cover	1	1	1
21	99-7541	Screw	2	2	2
23		Throttle valve	1	1	1
24		Valve shaft	1	1	1
25		Valve shaft screw	2	2	2
26	99-7542	Sealing ring	1	1	1
27		Throttle lever	1	1	1
28		Throttle lever	1	1	1
29		Washer	1	1	1
30		Nut	1	1	1
31		Retaining arm	1	1	1
32		Screw	2	2	2
33		Washer	2	2	2
34		Idling stop screw	1	1	1
35	99-7543	Return spring - throttle lever	1	1	1
39		Screw	1	1	1
40		Float	1	1	1
41		Float pin	1	1	1
42	99-7544	Float needle	1	1	1
44		Float chamber	1	1	1
45		Spring valve	1	1	1
46	99-7545	Float chamber gasket	1	1	1
47		Disc	1	1	1
48		Cold start body	1	1	1
49		Rubber ring	1	1	1
50	99-7546	Gasket	1	1	1

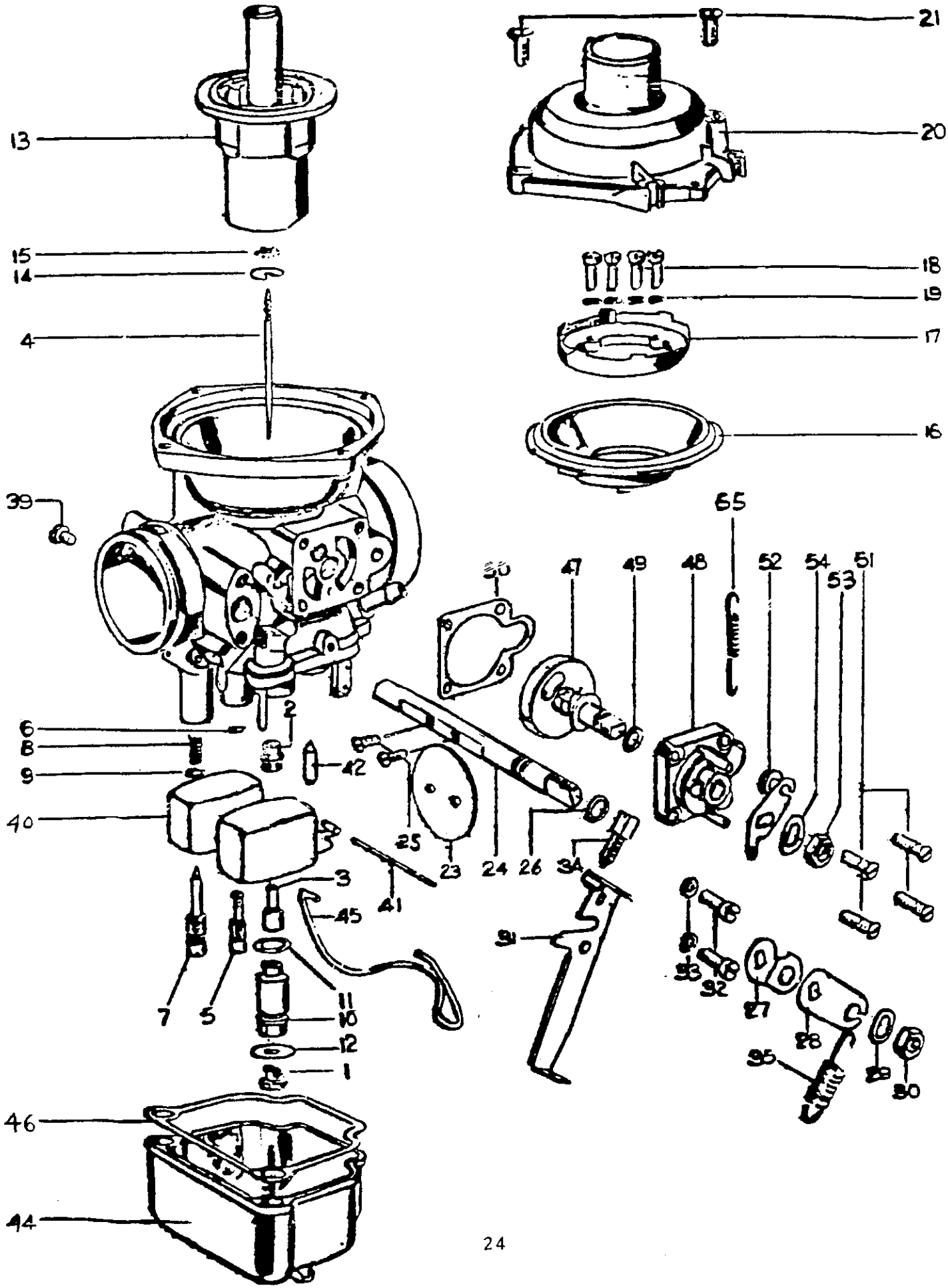
21
13
20
15
14
18
19
4
17
16
39
65
50
47
49
48
52
54
53
51
6
8
9
2
42
40
25
23
24
26
34
3
41
45
91
53
52
27
28
29
30
35
7
5
11
10
12
1
46
44

CARBURETOR

Ref. No.	Part No.	Description	T140 E2S Qty Req	T140 LE Qty Req	T140 EX Qty Req
51		Screw	4	4	4
52		Cold start lever	1	1	1
53		Nut	1	1	1
54		Washer	1	1	1
55	99-7547	Return spring - cold start	1	1	1

COVER TO CRANKCASE SCREW INFORMATION			
LETTER	PART No	LENGTH UH	QUANTITY
A	14-7012	2½"	1
B	14-7013	2¾"	2
C	14-7006	1"	3
D	14-7007	1¼"	2

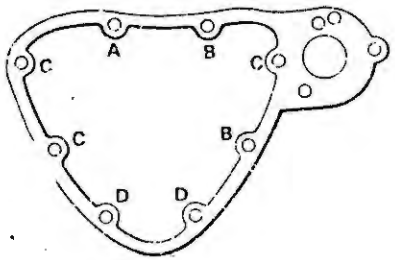

TIMING COVER AND PULSE SENSOR

Ref. No.	Part No.	Description	T140 E2S Qty	LE Req	EX
1	71-7501	TIMING COVER ASSEMBLY	1	1	1
2	71-7377	Spindle, 2nd stage starter reduction	1	1	1
3	71-7376	Spindle, 3rd stage starter reduction	1	1	1
4	21-7066	Stud, outrigger plate starter reduction	4	4	4
5	71-7327	Cover, starter motor inspection	1	1	1
NI	71-7328	Gasket, inspection cover starter motor	1	1	1
6	14-7003	Screw, inspection cover to timing cover	2	2	2
7	14-7006	Screw, inspection cover to timing cover	1	1	1
8	14-7012	Screw, timing cover to crankcase	1	1	1
9	14-7013	Screw, timing cover to crankcase	2	2	2
10	71-7400	Pillar bolt, pulse sensor	2	2	2
11	70-6559	Washer, pillar bolt pulse sensor	4	4	4
12	71-7159	Cover, pulse sensor	1	1	1
13	71-1462	Gasket, pulse sensor cover	1	1	1
14	70-7354	Screw, pulse sensor cover fixing	2	2	2
15	97-0430	Washer, pulse sensor cover	2	2	2
16	14-0207	Bolt, reluctor fixing	1	1	1
17	70-8163	Washer, reluctor fixing	1	1	1
18	54400766	Pulse sensor	1	1	1
19	54400905	Reluctor	1	1	1
20	14-7006	Screw, timing cover to crankcase	3	3	3
21	14-7007	Screw, timing cover to crankcase	2	2	2
22	70-4568	Oil seal, at camshaft and crankshaft	2	2	2
23	70-4569	Circlip, oil seal at crankshaft	1	1	1
24	71-7494	Spindle, for 71-7416 & 71-7417	1	1	1
25	60-7385	Pin, spindle fixing for 71-7494	1	1	1
26	71-7383	Dowel, locating starter motor to timing cover	1	1	1
NI	60-7295	O'Ring, starter motor to timing cover	1	1	1
27	14-7020	Screw, starter motor to timing cover	3	3	3
28	60-2428	Washer, for 14-7020	3	3	3
29	60-7296	Starter motor assembly	1	1	1
30	71-7226	Pinion, starter motor 16T	1	1	1
31	60-7292	Retainer, pinion to starter motor	1	1	1
32	71-7416	Pinion 16T and coupling flange	1	1	1
33	71-7417	Gear, driver 54T	1	1	1
34	60-7340	Bush, shock absorber	2	2	2
35	71-7418	Plate, bush retainer	1	1	1
36	21-7083	Screw, for 71-7418 fixing	1	1	1
37	60-2330	Washer, thrust for cush drive	1	1	1
38	14-0402	Nut, cush drive adjustment	2	2	2
39	71-7242	Gear, starter reduction 36-16T	1	1	1
40	71-7243	Gear, starter reduction 36-11T	1	1	1
41	71-7436	Gear, starter reduction 24T	1	1	1
42	71-7379	Plate, outrigger upper	1	1	1
43	14-1202	Nut, fixing outrigger plates	2	2	2
44	21-7092	Nut, fixing outrigger plates socket head	2	2	2

COVER TO CRANKCASE SCREW INFORMATION			
LETTER	PART No	LENGTH UH	QUANTITY
A	14-7012	2½"	1
B	14-7013	2¾"	2
C	14-7006	1"	3
D	14-7007	1¼"	2

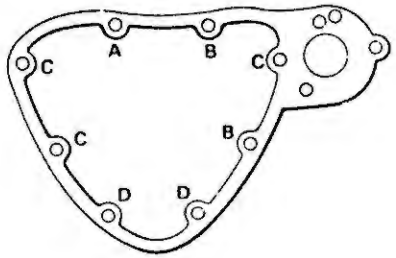

TIMING COVER AND PULSE SENSOR (CONT.)

Ref. No.	Part No.	Description	T140 E2S Qty Req	T140 LE Qty Req	T140 EX Qty Req
45	60-2428	Washer, for 21-7092	2	2	2
46	71-7380	Plate, outrigger lower	1	1	1
47	60-3719	Switch, oil pressure	1	1	1
NI	70-4144	Cover, oil pressure switch	1	1	1
NI	71-7421	Cush drive assembly (comprising lines 32, 33, 34, 35 & 36)	1	1	1

NOTE: For sprag clutch information see page 13.

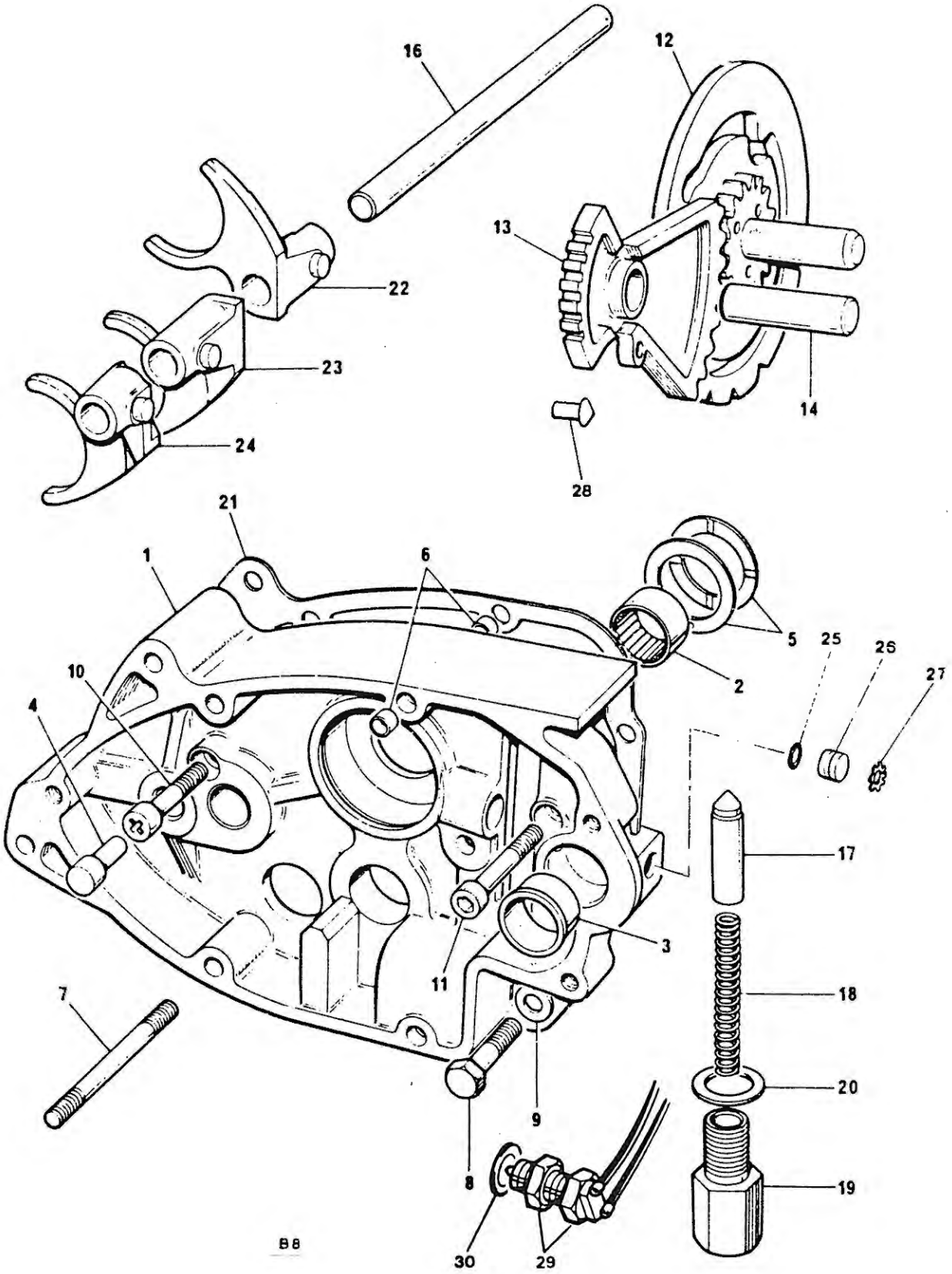

GEARBOX INNER COVER AND SELECTORS

GEARBOX INNER COVER AND SELECTORS

Ref. No.	Part No.	Description	T140 E2S Qty Req	LE	EX
1	57-7049	GEARBOX INNER COVER ASSEMBLY	1		1
1	57-7074	GEARBOX INNER COVER ASSEMBLY		1	
2	57-1614	Bearing, needle layshaft R/H	1	1	1
3	57-7009	Bush, gear change quadrant spindle	1	1	1
4	57-0045	Stop, kickstart quadrant	1	1	1
5	57-1607	Washer, thrust layshaft	2	2	2
6	57-0989	Dowel, locating inner to outer G/B cover	4	4	4
7	21-2149	Stud, inner to outer G/B cover	2	2	2
8	21-1907	Bolt, inner cover to crankcase	1	1	1
9	70-3446	Washer, for 21-1907	1	1	1
10	14-6608	Screw, inner cover to crankcase	1	1	1
11	14-7023	Screw, inner cover to crankcase	1	1	1
12	57-4889	Camplate, gear change	1	1	1
13	57-7052	Quadrant, c/w neutral operating pin	1	1	1
14	57-7011	Spindle, quadrant	1	1	1
16	57-3989	Rod, selector forks	1	1	1
17	57-7020	Plunger, camplate index	1	1	1
18	57-4459	Spring, camplate index plunger	1	1	1
19	57-4400	Housing, camplate index plunger	1	1	1
20	57-3978	Washer, for 57-4400	1	1	1
21	57-7012	Gasket, inner cover to crankcase	1	1	1
22	57-4364	Fork, selector mainshaft 4th gear	1	1	1
23	57-4366	Fork, selector layshaft 3rd gear	1	1	1
24	57-4660	Fork, selector layshaft 1st gear	1	1	1
25	37-3761	O'Ring for 57-7015	1	1	1
26	57-7015	Plug, quadrant spindle	1	1	1
27	57-7016	Retainer, for 57-7015	1	1	1
28	57-7041	Pin, operating neutral switch	1	1	1
29	33906	Switch, neutral c/w locknut	1	1	1
30	70-1335	Washer, for 33906	1	1	1

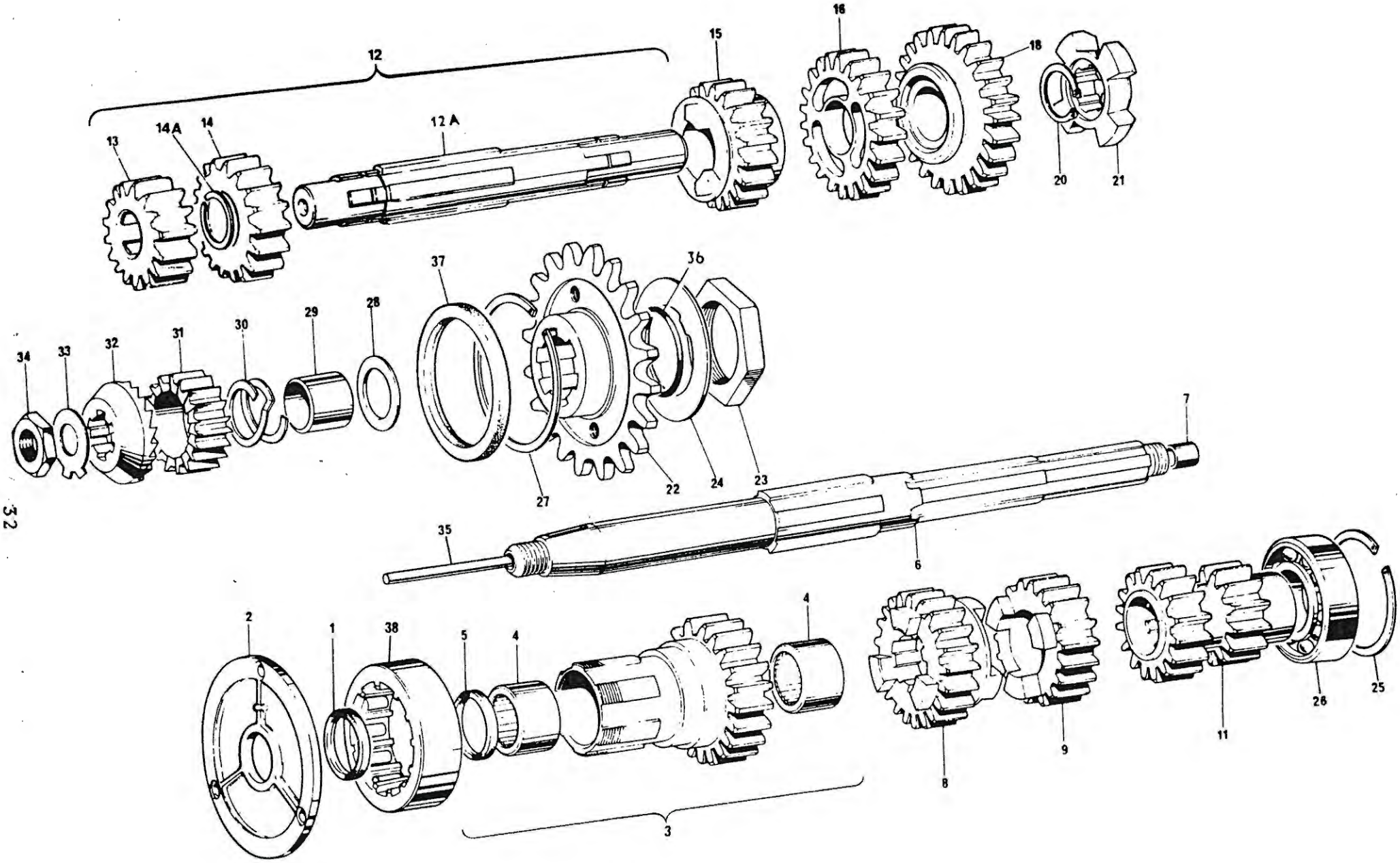

GEARBOX SHAFTS AND GEARS

GEARBOX SHAFTS AND GEARS

Ref. No.	Part No.	Description	T140 E2S Qty	LE Req	EX
1	60-3500	Seal, oil gearbox sprocket cover plate	1	1	1
2	70-3789	Plate, cover gearbox sprocket	1	1	1
3	57-4779	MAINSHAFT HIGH GEAR ASSEMBLY	1	1	1
4	60-3511	Bearing, needle roller	2	2	2
5	60-3500	Seal, oil mainshaft high gear	1	1	1
6	57-4432	MAINSHAFT C/W CLUTCHROD BUSH	1	1	1
7	57-3988	Bush, clutch pushrod	1	1	1
8	57-4376	Mainshaft 4th gear	1	1	1
9	57-4377	Mainshaft 3rd gear c/w bush	1	1	1
11	57-4653	Mainshaft 1st and 2nd gear	1	1	1
12	57-4900	LAYSHAFT C/W HIGH AND 4TH GEAR	1	1	1
12A	57-4901	Layshaft, bare	1	1	1
13	57-4791	Layshaft, high gear	1	1	1
14	57-4787	Layshaft, 4th gear c/w bush	1	1	1
14A	57-4790	Circlip, for 57-4791	1	1	1
15	57-4647	Layshaft 3rd gear	1	1	1
16	57-4657	Layshaft 2nd gear c/w bush	1	1	1
18	57-4654	Layshaft 1st gear c/w bush	1	1	1
20	60-3494	Circlip, layshaft	1	1	1
21	57-4661	Driving Dog, layshaft 1st gear	1	1	1
22	57-4782	Sprocket, gearbox 20T	1	1	1
22	57-4783	Sprocket, gearbox 19T	A	A	A
22	57-4784	Sprocket, gearbox 18T	A	A	A
23	57-4396	Nut, gearbox sprocket	1	1	1
24	57-4909	Washer, for 57-4396	1	1	1
25	70-0489	Circlip, mainshaft bearing	1	1	1
26	60-3552	Bearing, mainshaft	1	1	1
27	57-4113	Circlip. mainshaft bearing	1	1	1
28	57-1962	Washer, kickstarter sleeve	1	1	1
29	57-1963	Sleeve, kickstarter pinion	1	1	1
30	57-1250	Spring, kickstarter pinion	1	1	1
31	57-0730	Pinion, kickstarter	1	1	1
32	57-0731	Ratchet, kickstarter	1	1	1
33	57-2240	Washer, for 21-0594	1	1	1
34	21-0594	Nut, mainshaft	1	1	1
35	57-1736	Rod, clutch operating	1	1	1
36	71-1070	O'Ring, gearbox sprocket	1	1	1
37	60-3512	Seal, oil gearbox sprocket	1	1	1
38	60-4100	Bearing, mainshaft high gear	1	1	1

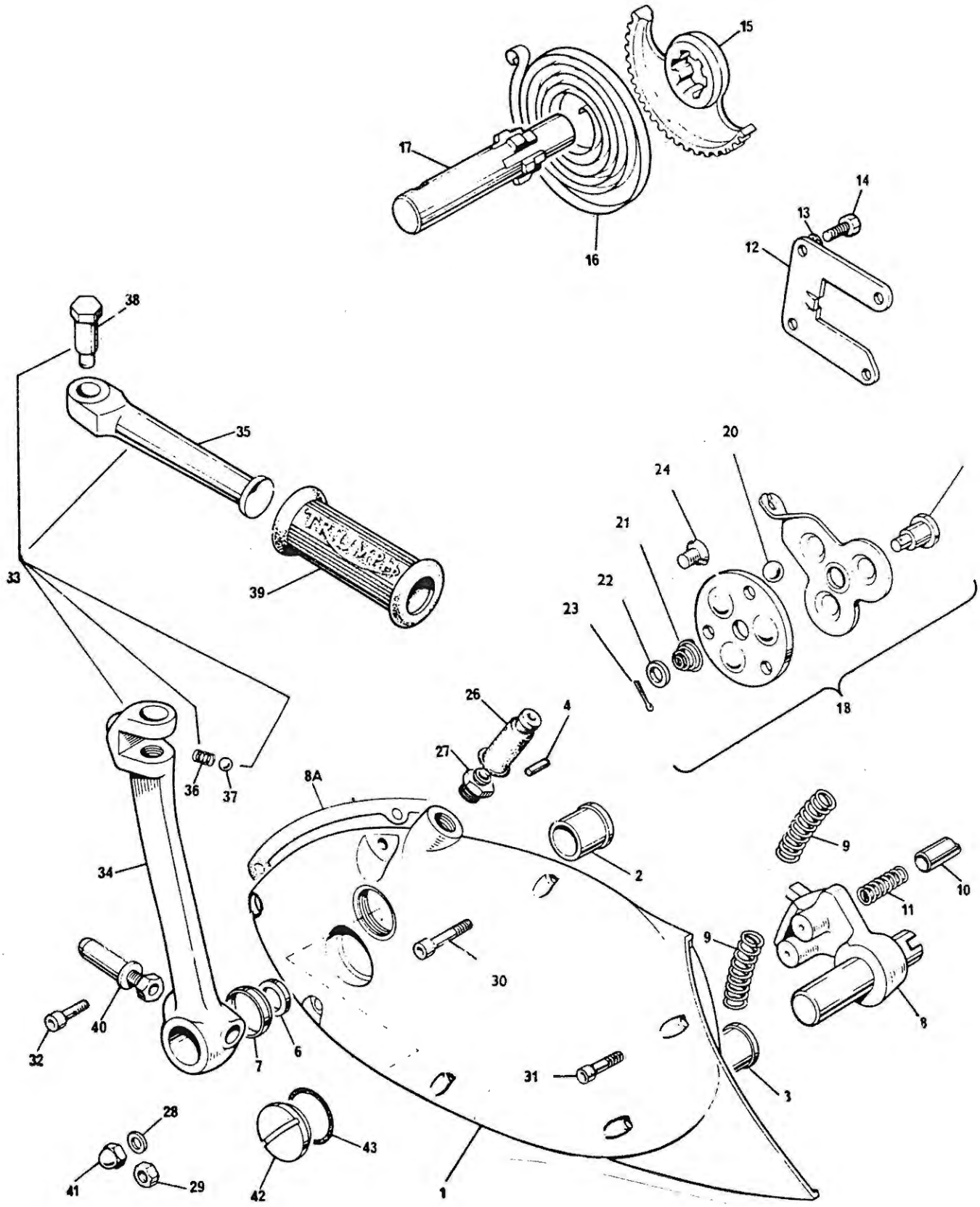

GEARBOX OUTER COVER

GEARBOX OUTER COVER - FOLDING KICKSTARTER

Ref. No.	Part No.	Description	T140 E2S Qty Req	LE	EX
1	57-7014	GEARBOX OUTER COVER ASSEMBLY	1	1	1
2	57-0023	Bush, kickstarter axle shaft	1	1	1
3	57-7008	Bush, gearchange quadrant	1	1	1
4	57-0047	Pin, kickstarter spring anchor	1	1	1
6	57-1956	Seal, oil kickstarter axle shaft	1	1	1
7	57-1955	Housing, for 57-1956	1	1	1
8	57-7021	Quadrant, gear change	1	1	1
8A	71-1448	Gasket, gearbox outer cover	1	1	1
9	57-7051	Spring, gear change quadrant	1	1	1
10	57-4403	Plunger, gear change quadrant	2	2	2
11	57-0405	Spring, for 57-4403	2	2	2
12	57-0407	Plate, guide gear change plunger	1	1	1
13	70-1612	Washer, for 14-6103	4	4	4
14	15-6103	Bolt, for 57-0407 fixing	4	4	4
15	57-4117	Quadrant, kickstarter	1	1	1
16	57-0031	Spring, kickstarter return	1	1	1
17	57-4756	Axle shaft, kickstarter	1	1	1
18	57-7033X	CLUTCH OPERATING LEVER ASSEMBLY	1	1	1
19	57-1710	Shaft, clutch release	1	1	1
20	60-2368	Ball, clutch release	3	3	3
21	57-1712	Spring, clutch release	1	1	1
22	57-3673	Washer, for 57-1712	1	1	1
23	60-2701	Pin, for 57-1712 retaining	1	1	1
24	21-1879	Screw, clutch operating lever fixing	2	2	2
26	57-1646	Cover, clutch cable at G/B outer cover	1	1	1
27	57-3762	Abutment, clutch cable	1	1	1
28	60-4247	Washer, for 21-0544 & 14-1302	2	2	2
29	14-1302	Nut, outer cover to inner cover fixing	1	1	1
30	14-7013	Screw, outer cover to crankcase	2	2	2
31	14-7007	Screw, outer cover to inner cover	2	2	2
32	14-7006	Screw, outer cover to inner cover	1	1	1
33	57-7018	FOLDING KICKSTARTER ASSEMBLY	1	1	1
34	57-2173	Crank, kickstarter	1	1	1
35	57-7017	Pedal, kickstarter	1	1	1
36	57-1167	Spring, pedal locating	1	1	1
37	60-2364	Ball, pedal	1	1	1
38	21-0541	Bolt, pedal	1	1	1
39	57-2330	Rubber, pedal	1	1	1
40	57-4356	Pin, kickstarter crank to axle shaft	1	1	1
41	21-0544	Nut, dome outcover fixing	1	1	1
42	57-2166	Plug, oil filler	1	1	1
43	70-8782	O'Ring, for 57-2166	1	1	1

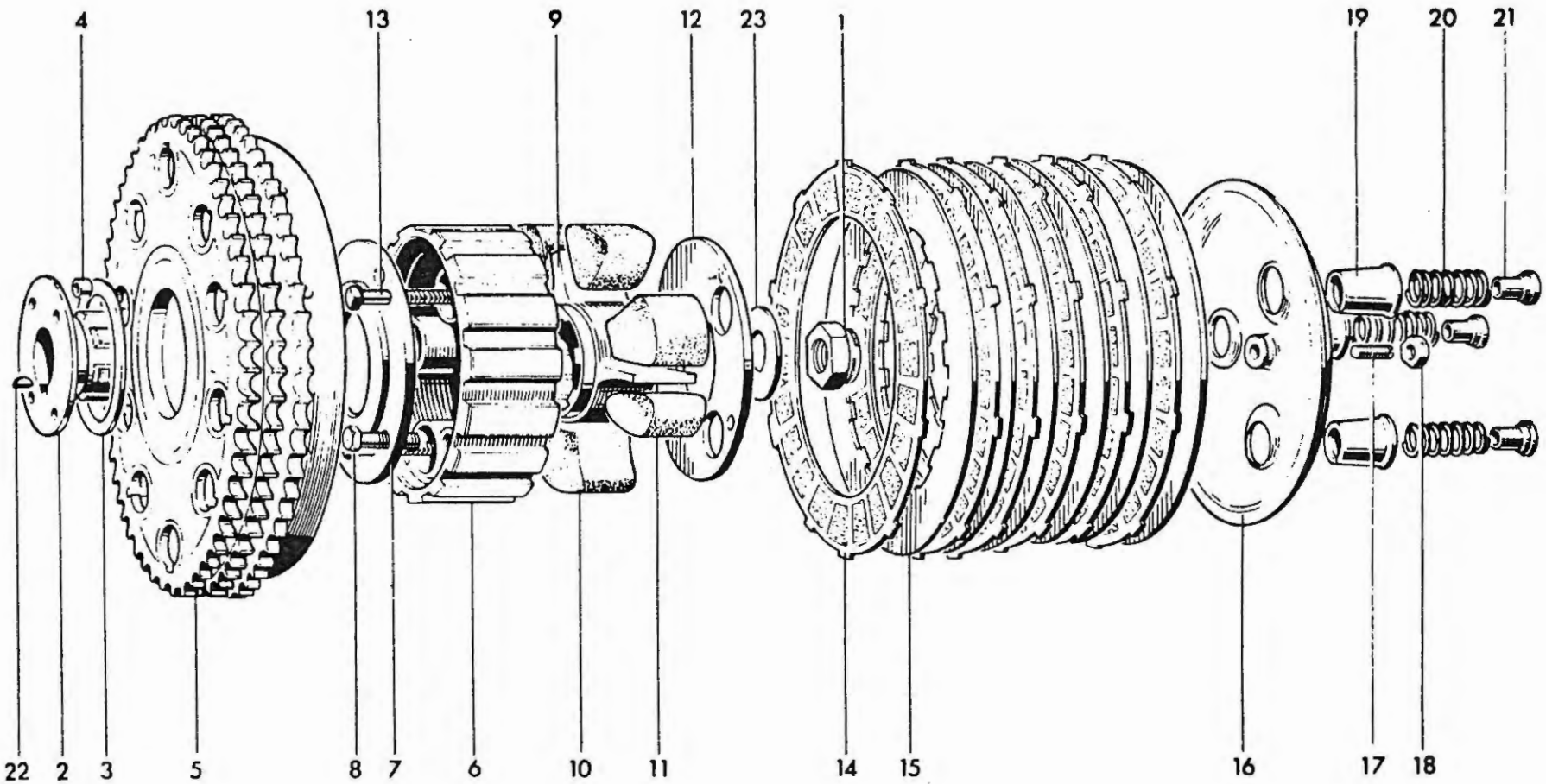

CLUTCH

CLUTCH

Ref. No.	Part No.	Description	T140 E2S Qty Req	T140 LE Qty Req	T140 EX Qty Req
1	21-0586	Nut, securing clutch to mainshaft	1	1	1
2	57-3929	Hub, at sprocket end housing	1	1	1
3	57-3931	Washer, thrust at clutch hub	1	1	1
4	57-0394	Roller, for clutch hub	20	20	20
5	57-7065	Sprocket and clutch housing	1	1	1
6	57-4438	Center, clutch shock absorber	1	1	1
7	57-4436	Plate, clutch shock absorber inner	1	1	1
8	21-2157	Bolt, clutch shock absorber securing	3	3	3
9	57-4636	Spider, clutch shock absorber	1	1	1
10	57-1722	Rubber, drive clutch shock absorber	3	3	3
11	57-1723	Rubber, rebound clutch shock absorber	3	3	3
12	57-4437	Plate, clutch shock absorber outer	1	1	1
13	57-4754	Bolt, clutch spring adjusting	3	3	3
14	57-7058	Plate, (bonded) driving	6	6	6
15	57-7060	Plate, (steel) driven	7	7	7
16	57-4590	Pressure plate	1	1	1
17	57-2159	Pin, clutch rod adjusting	1	1	1
18	14-0403	Nut, securing for 57-2159	1	1	1
19	57-1931	Cup, clutch spring	3	3	3
20	57-1830	Spring, clutch	3	3	3
21	57-2526	Nut, clutch spring adjusting	3	3	3
22	60-4253	Key, clutch hub to mainshaft	1	1	1
23	57-4794	Washer, mainshaft securing nut	1	1	1

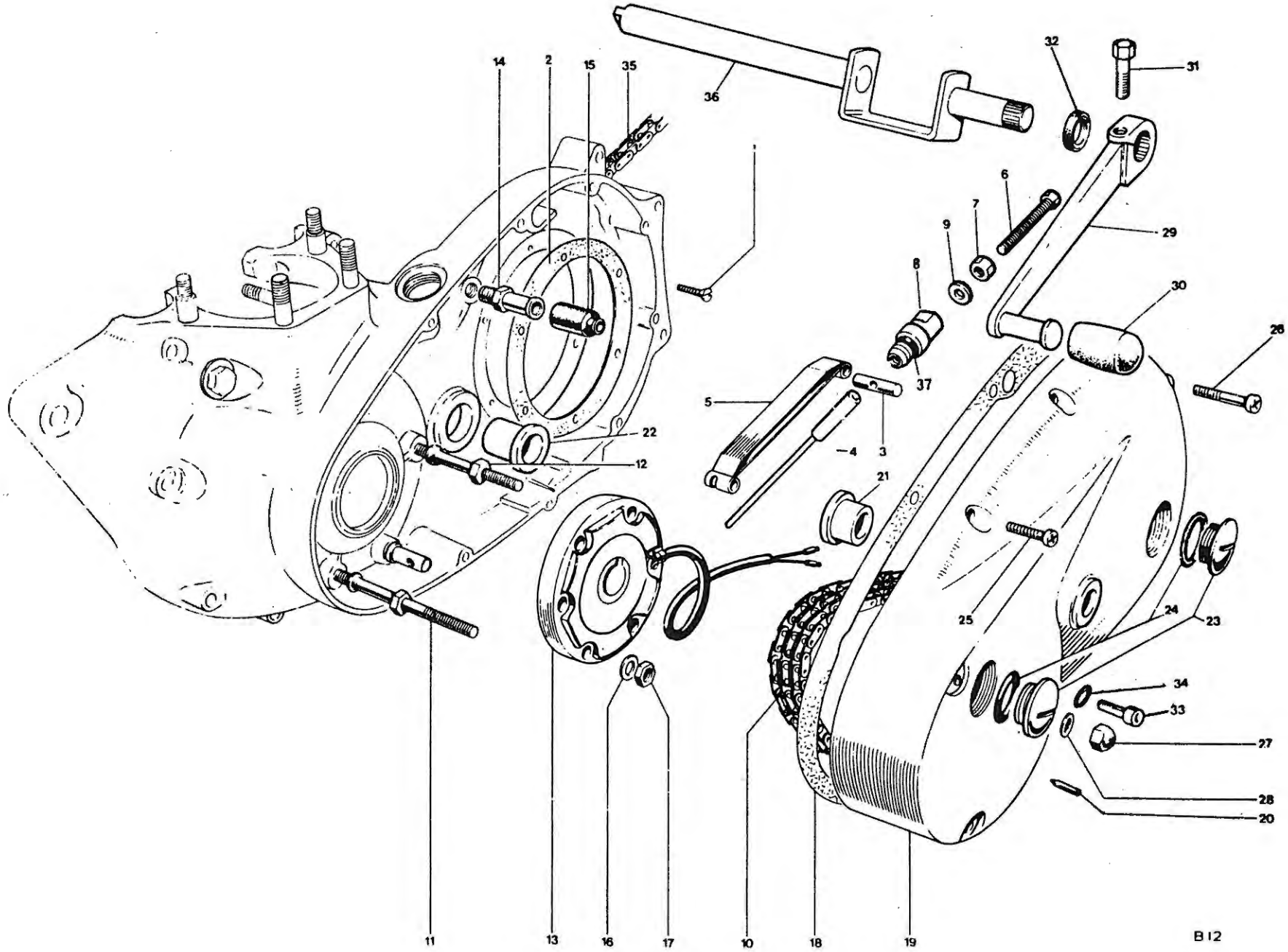

CHAINCASE AND CHAINS

PRIMARY CHAINCASE - DRIVE CHAINS

Ref. No.	Part No.	Description	T140 E2S Qty Req	T140 LE Qty Req	T140 EX Qty Req
1	70-3821	Screw, fixing G/B sprocket inspection plate	6	6	6
2	71-1419	Gasket, gearbox sprocket inspection plate	1	1	1
3	70-5087	Trunion, primary chain tensioner	1	1	1
4	71-7255	Tie rod, primary chain tensioner	1	1	1
5	70-5085	Blade, primary chain tensioner	1	1	1
6	21-7064	Screw, adjusting primary chain tensioner	1	1	1
7	14-0401	Nut, for 21-7064	1	1	1
8	71-7259	Plug, primary chain tensioner	1	1	1
9	60-7268	Washer, for 14-0401	1	1	1
10	60-4125	Chain, primary 3/8" triplex X 84 links	1	1	1
11	21-2199	Stud, fixing alternator to crankcase	2	2	2
12	21-2198	Stud, fixing alternator to crankcase	1	1	1
13	47244	Alternator assembly	1	1	1
14	70-9360	Sleeve nut, alternator lead wire	1	1	1
15	70-4144	Cover, alternator lead wire	1	1	1
16	60-4247	Washer, for 21-1852	3	3	3
17	21-1852	Nut, alternator fixing	3	3	3
18	71-7009	Gasket, primary cover	1	1	1
19	71-7464	PRIMARY CHAINCASE COVER	1	1	1
20	71-3892	Pointer, timing	1	1	1
21	57-7055	Bush, footchange spindle	1	1	1
22	57-7009	Bush, footchange spindle at crankcase	1	1	1
23	71-3895	Plug, inspection primary cover	2	2	2
24	71-3896	O'Ring, for 71-3895	2	2	2
25	14-7006	Screw, primary cover fixing	6	6	6
26	14-7019	Screw, primary cover fixing	2	2	2
27	21-0544	Nut, dome primary cover fixing	2	2	2
28	82-1880	Washer, for 21-0544	2	2	2
29	57-7010	Pedal, gear change	1	1	1
30	57-2331	Rubber, gear change pedal	1	1	1
31	14-0201	Bolt, gear change pedal fixing	1	1	1
32	57-1956	Seal, oil gear change spindle shaft	1	1	1
33	14-7017	Plug, drain primary cover	1	1	1
34	70-6299	O'Ring, for 14-7017	1	1	1
35	60-1915	Chain, rear 5/8" X 3/8" X 106 links	1	1	1
36	57-7062	Gear change spindle shaft	1	1	1
37	70-6299	O'Ring, for 71-7259 Ref. No. 8	1	1	1

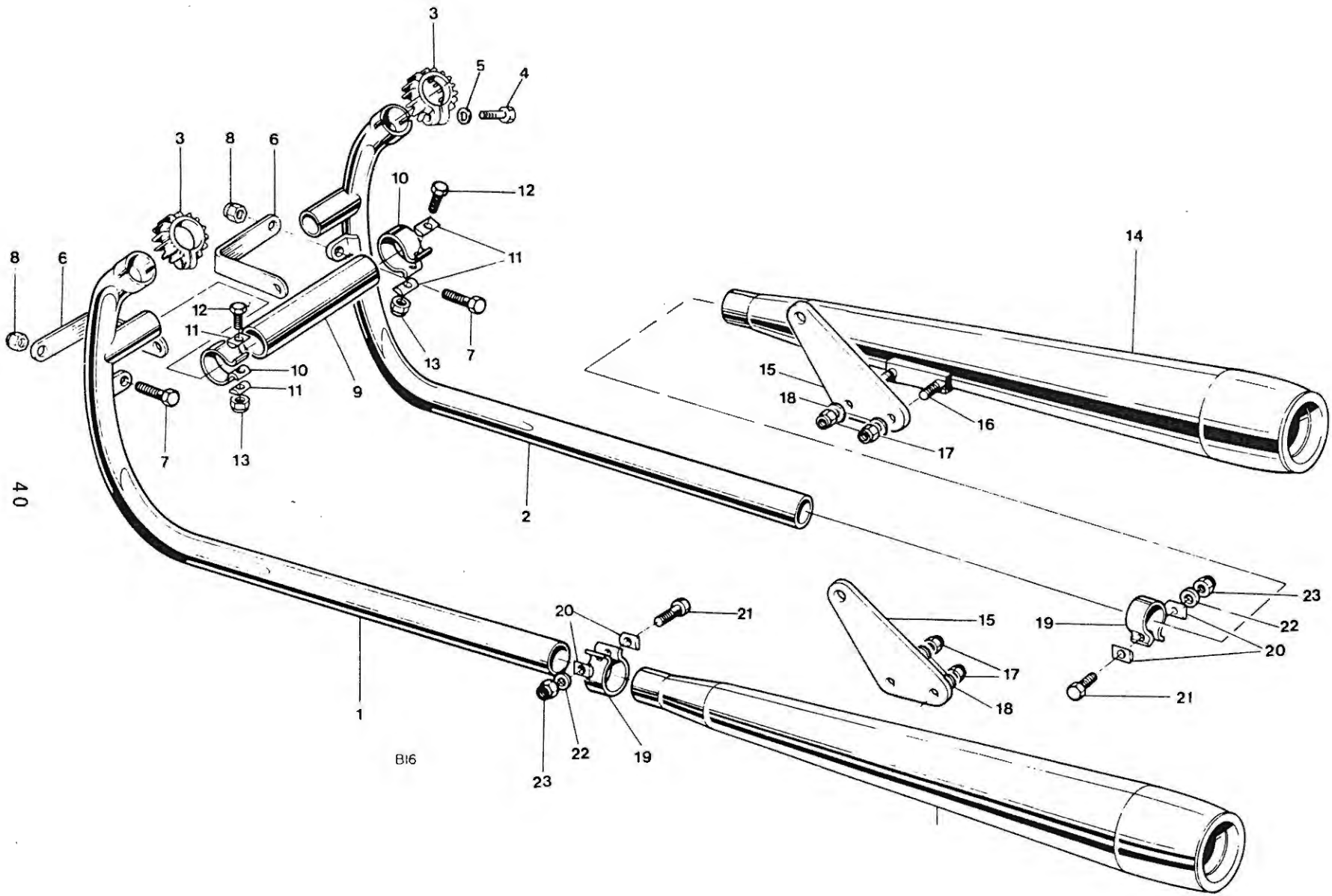

EXHAUST PIPES AND SILENCERS

EXHAUST PIPES - MUFFLERS

Ref. No.	Part No.	Description	T140 E2S Qty	LE Req	EX
1	71-7507	Exhaust pipe - left	1	1	1
2	71-7508	Exhaust pipe - right	1	1	1
3	71-0216	Clip, finned at cylinder head	2	2	2
4	70-6744	Bolt, for 71-0216	2	2	2
5	70-8860	Washer, for 70-6744	2	2	2
6	70-6857	Bracket, exhaust pipe to crankcase	2	2	2
7	14-0102	Bolt, for 70-6857	2	2	2
8	14-1301	Nut, for 14-0102	2	2	2
9	70-9888	Pipe, coupling exhaust	1	1	1
10	70-7512	Clip, for 70-9888	2	2	2
11	70-3768	D'Washer, for 70-7512	4	4	4
12	14-0217	Bolt, for 70-7512	2	2	2
13	14-1202	Nut, for 14-0217	2	2	2
14	71-4159	Muffler	2	2	2
15	83-7582	Hanger, muffler	2	2	2
16	14-0102	Bolt, muffler to hanger	4	4	4
17	14-1201	Nut, for 14-0102	4	4	4
18	60-2338	Washer, for 14-1201	4	4	4
19	70-5874	Clip, exhaust pipe to muffler	2	2	2
20	70-3768	D'Washer, for 70-5874	4	4	4
21	14-0219	Bolt, for 70-5874	2	2	2
22	60-4247	Washer, for 14-1202	2	2	2
23	14-1202	Nut, for 14-0219	2	2	2

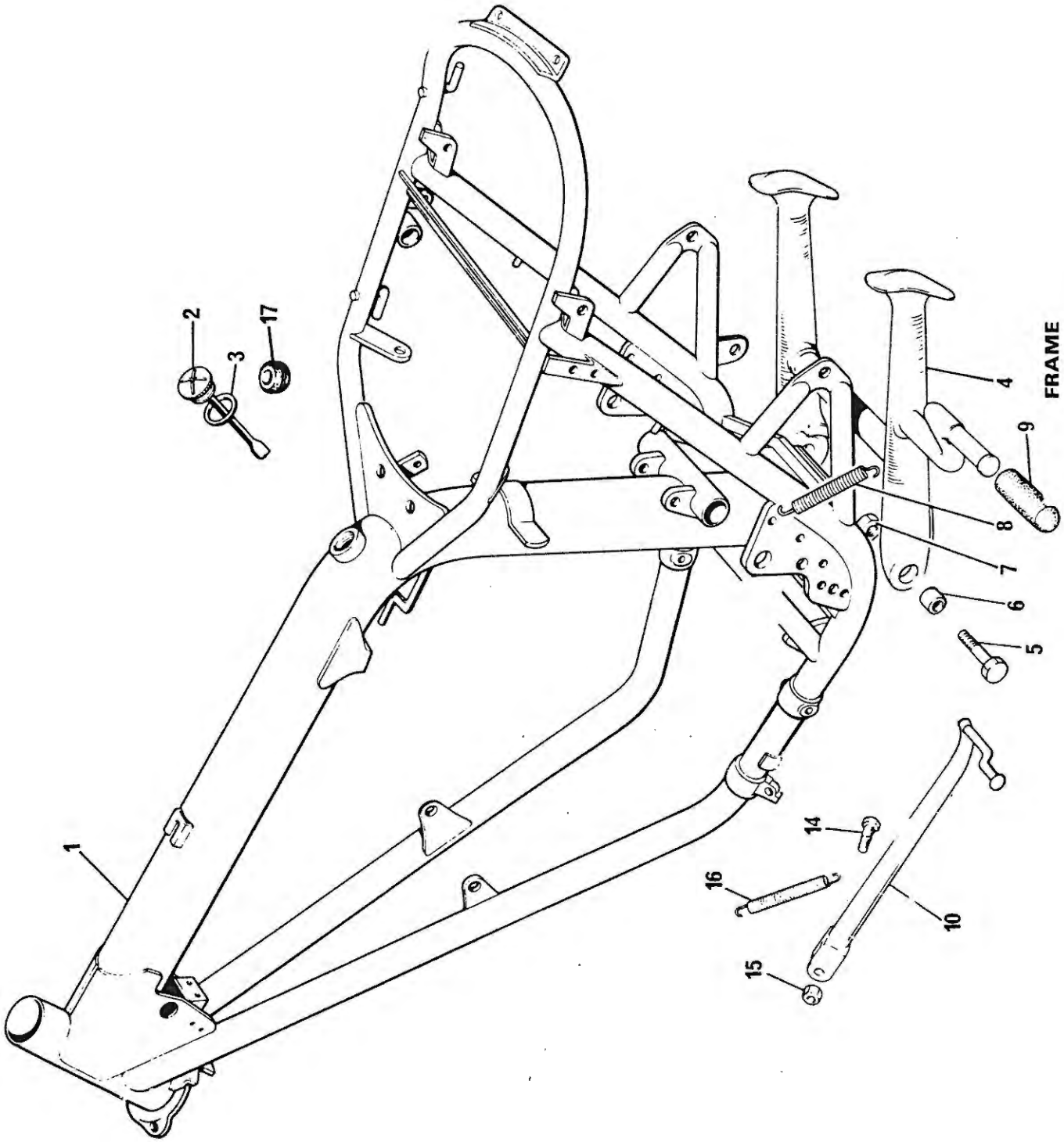
FRAME
1
2
3
4
5
6
7
8
9
10
14
15
16
17

FRAME - CENTER STAND - SIDE STAND

Ref. No.	Part No.	Description	T140 E2S Qty Req	T140 LE Qty Req	T140 EX Qty Req
1	83-7537	FRAME ASSEMBLY	1	1	1
2	71-3463	Oil cap c/w dipstick	1	1	1
3	60-3616	O'Ring, for 71-3463	1	1	1
4	83-7532	CENTER STAND	1	1	1
5	14-0147	Bolt, center stand pivot	2	2	2
6	83-7460	Bush, center stand pivot	2	2	2
7	14-1305	Nut, for 14-0147	2	2	2
8	83-3793	Spring, center stand return	1	1	1
9	57-2331	Rubber, center stand extension arm	1	1	1
10	83-7553	SIDE STAND	1	1	1
14	82-7021	Bolt, side stand pivot	1	1	1
15	14-1303	Nut, for 82-7021	1	1	1
16	82-8382	Spring, side stand return	1	1	1
NI	60-3361	Decal, "Made in England"	1	1	1
17	82-6784	Grommet, battery leads	2	2	2

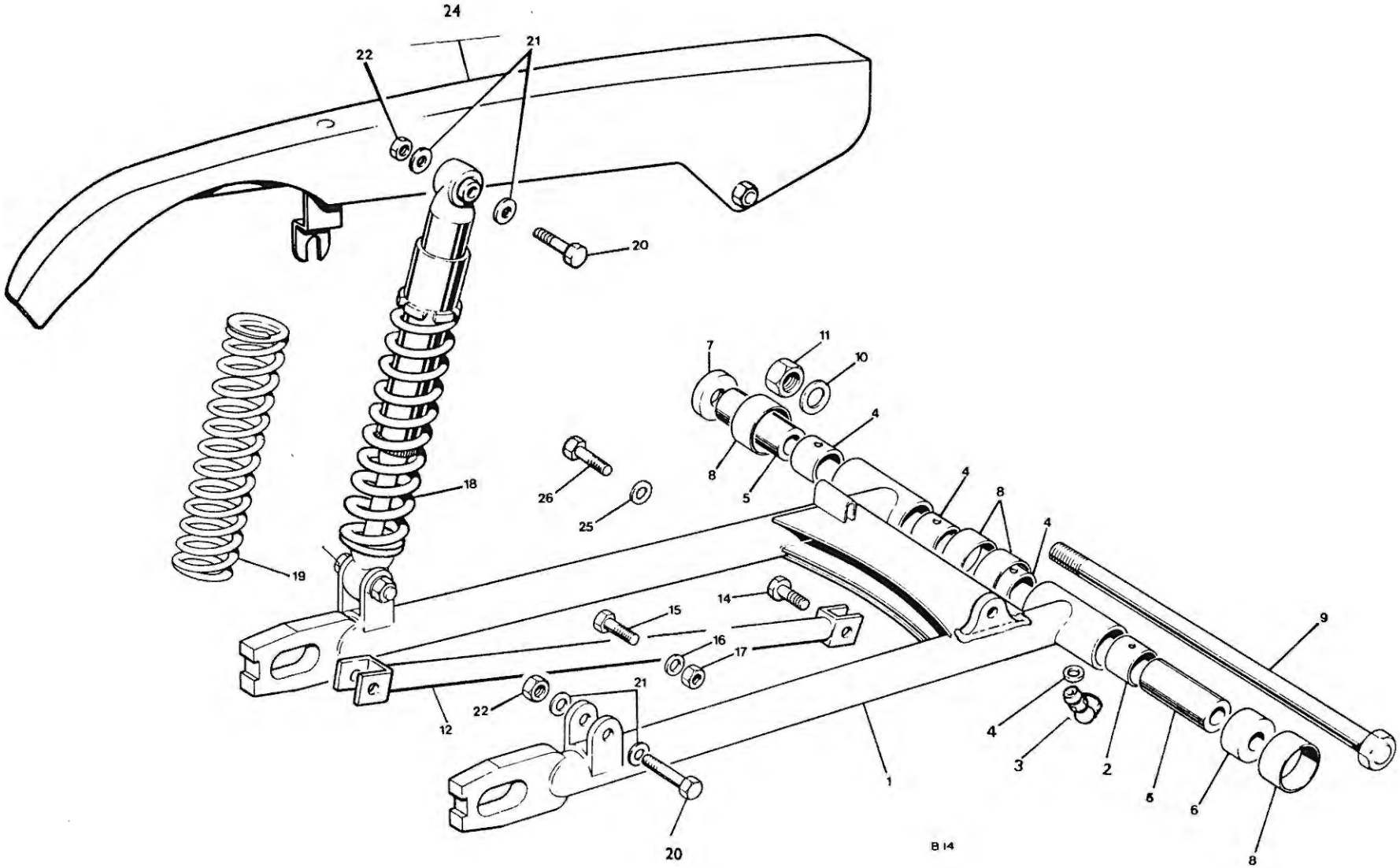

SWINGING ARM AND SUSPENSION UNITS

SWINGING ARM - SUSPENSION UNITS - CHAINGAURD

Ref. No.	Part No.	Description	T140 E2S Qty Req	LE	EX
1	83-7510	SWINGING ARM ASSEMBLY	1	1	1
2	83-2521	Bush, swinging arm	4	4	4
3	60-7336	Zerk, grease (angled)	1	1	1
4	21-7097	Washer, for 60-7336	1	1	1
5	83-2691	Sleeve, swinging arm pivot	2	2	2
6	83-2690	Spacer, swinging arm R/H	1	1	1
7	83-2689	Spacer, swinging arm L/H	1	1	1
8	83-2692	Excluder, debris	4	4	4
9	21-2087	Bolt, swinging arm pivot	1	1	1
10	83-2266	Washer, for 21-2087	2	2	2
11	14-1307	Nut, for 21-2087	1	1	1
12	83-8171	Torque strut, rear brake	1	1	1
14	21-7047	Bolt, fixing torque strut at swinging arm	1	1	1
15	21-7065	Bolt, fixing torque strut at caliper	1	1	1
16	60-2331	Washer, for Ref. No. 14 & 15	2	2	2
17	14-1803	Nut, for Ref. No. 14 & 15	2	2	2
18	60-7540	SUSPENSION UNIT		2	2
18	60-7549	SUSPENSION UNIT	2		
19		Spring, suspension unit		2	2
19		Spring, suspension unit	2		
20	14-0235	Bolt, fixing suspension unit top and bottom	4	4	4
21	60-2331	Washer, for 14-0235	8	8	8
22	14-1303	Nut, for 14-0235 (Btm. L/H)	1	1	1
22	14-1203	Nut, for 14-0235	3	3	3
24	83-2641	CHAINGUARD ASSEMBLY	1		1
24	83-8156	CHAINGUARD ASSEMBLY		1	
25	60-2347	Washer, for 14-0206	1	1	1
26	14-0206	Bolt, fixing chainguard front	1	1	1
NI	60-1841	Zerk, grease (straight)	1	1	1
NI	83-7221	Washer, for 60-1841	1	1	1

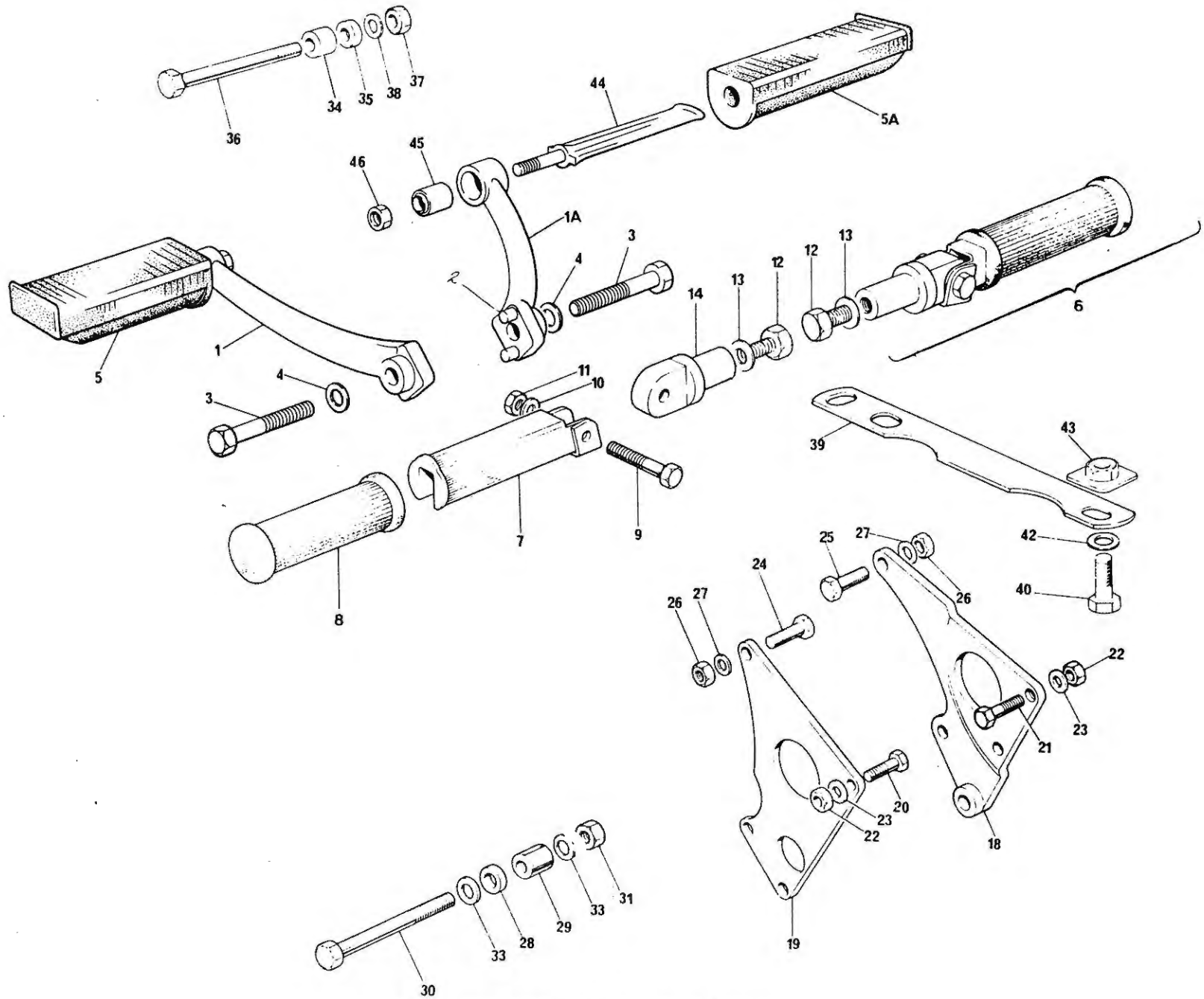

MOTOR UNIT FITTINGS AND FOOTRESTS

ENGINE UNIT FITTINGS - FOOTRESTS

Ref. No.	Part No.	Description	T140 E2S Qty	LE Req	EX
1	83-8034	Hanger, footrest L/H (rider)	1	1	1
1A	83-8036	Hanger, footrest R/H (rider)	1	1	1
2	82-5943	Peg, for Ref. 1 and 1A	4	4	4
3	14-0259	Bolt, fixing footrest hanger	2	2	2
4	60-2421	Washer, for 14-0259	2	2	2
5	83-7256	Rubber, footrest L/H (rider)	1	1	1
5A	83-7259	Rubber, footrest R/H (rider)	1	1	1
6	83-7695	PILLION FOOTREST ASSEMBLY L/H & R/H	2	2	2
7	83-7059	Pedal, pillion footrest	2	2	2
8	82-9054	Rubber, pillion footrest	2	2	2
9	14-0216	Bolt, pedal to pillion footrest hanger	2	2	2
10	82-9089	Washer, for 14-0216	2	2	2
11	14-1302	Nut, for 14-0216	2	2	2
12	14-0128	Bolt, pillion footrest hanger to frame	2	2	2
13	60-2419	Washer, for 14-0218	2	2	2
14	83-7694	Hanger, pillion footrest	2	2	2
18	83-7011	Plate, engine R/H rear	1	1	1
19	83-7009	Plate, engine L/H rear	1	1	1
20	14-0115	Bolt, fixing engine plates rear to frame	4	4	4
21	14-0218	Bolt, fixing engine plate rear R/H bottom to frame	1	1	1
22	14-1302	Nut, for 14-0115 & 14-0218	5	5	5
23	60-2330	Washer, for 14-0115 & 14-0218	9	9	9
24	14-0220	Bolt, fixing engine plate L/H to engine	2	2	2
25	14-0222	Bolt, fixing engine plate R/H to engine upper	1	1	1
25	14-0221	Bolt, fixing engine plate R/H to engine bottom	1	1	1
26	14-1302	Nut, for 14-0220 & 14-0221 & 14-0222	4	4	4
27	60-2321	Washer, for 14-0220 & 14-0221 & 14-0222	8	8	8
28	83-2846	Spacer, L/H engine to frame center bottom	1	1	1
29	83-2847	Spacer, R/H engine to frame center bottom	1	1	1
30	21-2112	Bolt, fixing engine to frame center bottom	1	1	1
31	14-1304	Nut, for 21-2112	1	1	1
33	60-2332	Washer, for 21-2112	1	1	1
34	83-2848	Spacer, L/H engine to frame front	1	1	1
35	83-2849	Spacer, R/H engine to frame front	1	1	1
36	14-0254	Bolt, engine to frame front	1	1	1
37	14-1304	Nut, for 14-0254	1	1	1
38	60-2332	Washer, for 14-0254	1	1	1
39	83-7467	Bracket, engine steady to frame	1	1	1
40	14-0128	Bolt, fixing engine steady to frame	1	1	1
42	60-2331	Washer, for 14-0128	1	1	1
43	83-4086	Plate, ixing for 14-0128	1	1	1
44	83-8038	Peg, footrest (rider)	2	2	2
45	60-7333	Bonded Bush, for 83-8038	2	2	2
46	14-1303	Nut, for 83-8038	2	2	2

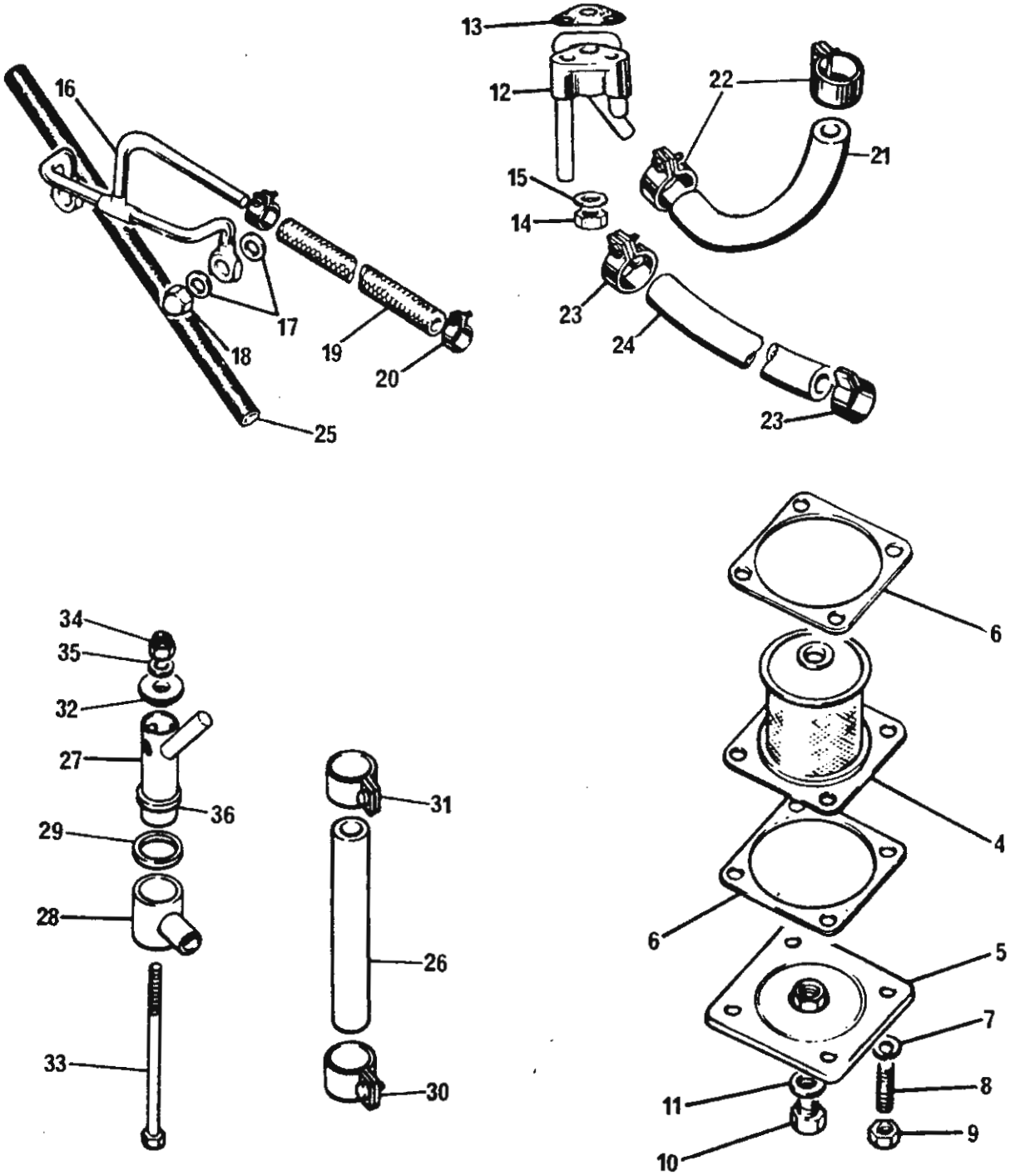

OIL AND BREATHER PIPES

OIL FILTER - OIL BREATHER PIPES

Ref. No.	Part No.	Description	T140 E2S Qty Req	LE	EX
4	83-4783	Oil filter	1	1	1
5	71-7584	Plate, oil sump	1	1	1
6	83-2829	Gasket, for 83-4783	2	2	2
7	60-2330	Washer, for 21-2109	4	4	4
8	21-2109	Stud, fixing sump plate to frame	4	4	4
9	14-1302	Nut, for 21-2109	4	4	4
10	21-1872	Plug, oil drain sump plate	1	1	1
11	37-3761	O'Ring, for 21-1872	1	1	1
12	71-7176	Oil junction block	1	1	1
13	71-3754	Gasket, oil junction block	1	1	1
14	21-1908	Nut, fixing junction block to crankcase	1	1	1
15	70-3446	Washer, for 21-1908	1	1	1
16	71-7550	Oil pipe connector at rocker box	1	1	1
17	70-1335	Washer, for 71-7550	4	4	4
18	21-0550	Nut, for 71-7550	2	2	2
19	71-3551	Rocker feed line	1	1	1
20	60-6848	Clip, for 71-3551	2	2	2
21	71-7058	Oil return line	1	1	1
22	60-4429	Clip, for 71-7058	2	2	2
23	60-4428	Clip, for 71-7015	2	2	2
24	71-7015	Oil feed line	1	1	1
25	83-7154	Oil vent line, rocker box to frame	1	1	1
26	83-7323	Breather line, crankcase to air box	1	1	1
27	83-8018	Breather tower assembly	1	1	1
28	83-7148	Banjo union, breather tower	1	1	1
29	21-7103	Washer, banjo union	1	1	1
30	60-2252	Clip, breather line to crankcase	1	1	1
31	60-7117	Clip, breather line to banjo union	1	1	1
32	83-7882	Cap, breather tower	1	1	1
33	14-0213	Bolt, fixing breather tower to air box	1	1	1
34	14-1901	Nut, for 14-0213	1	1	1
35	70-2441	Washer, for 14-0213	1	1	1
36	83-7884	Collar, breather tower	1	1	1

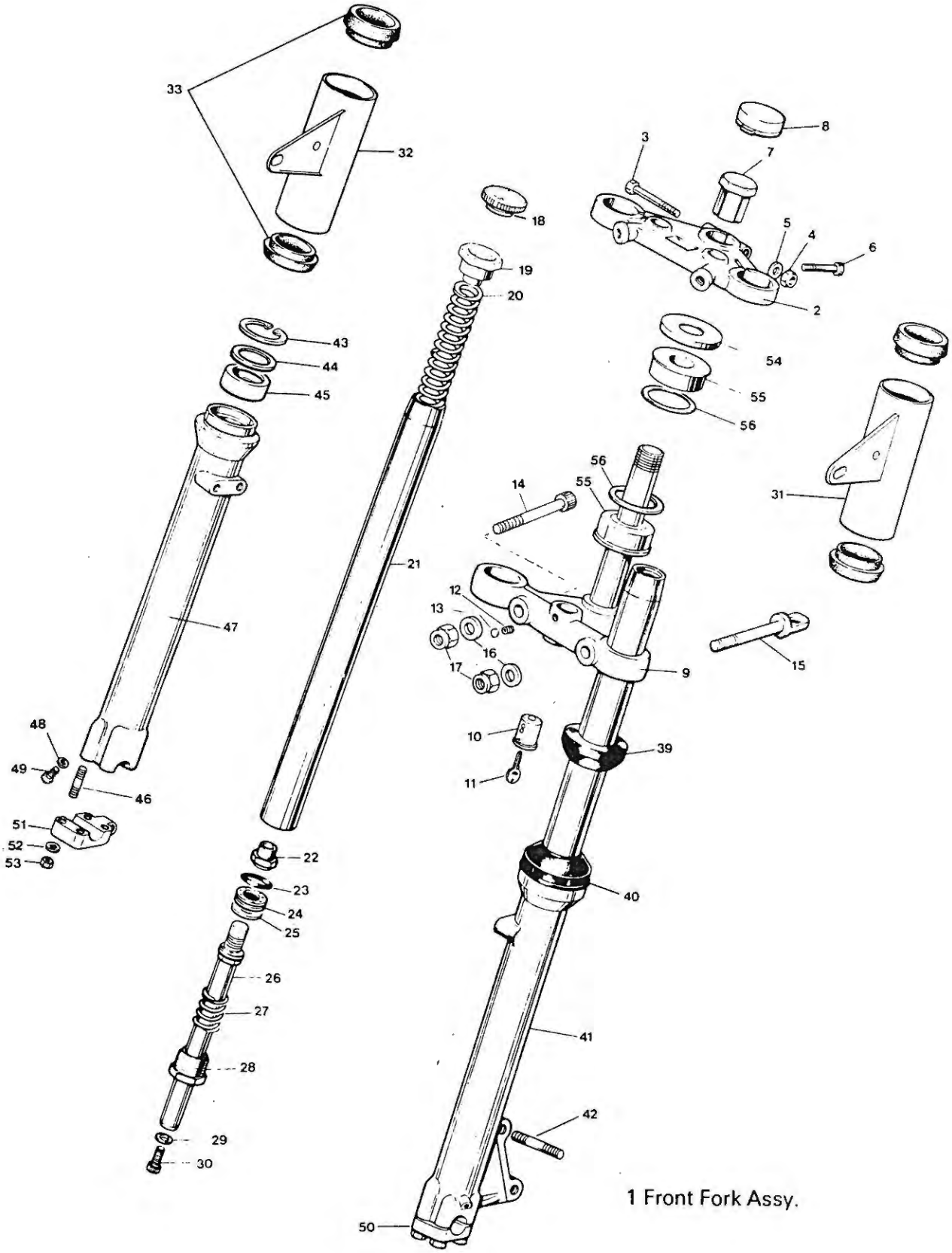

1 Front Fork Assy.

FRONT FORK ASSEMBLY

Ref. No.	Part No.	Description	T140 E2S Qty	LE Req	EX
1	97-7172	FRONT FORK ASSEMBLY (T140E2S)	1		
1	97-7173	FRONT FORK ASSEMBLY (Executive)			1
1	97-7174	FRONT FORK ASSEMBLY (Royal)		1	
2	97-7194	Top lug	1	1	1
3	14-0234	Bolt, top lug	1	1	1
4	14-1303	Nut, for 14-0234	1	1	1
5	60-2331	Washer, for 14-0234	1	1	1
6	14-1034	Screw, fixing top lug to stanchions	2	2	2
7	97-7070	Nut, steering stem at top lug	1	1	1
8	97-7071	Cap, for 97-7070	1	1	1
9	97-7096	Bottom lug and steering stem	1	1	1
10	60-7271	Anti-Thief lock c/w 2 keys	1	1	1
11	-	Key, for 60-7271 (must state Key No.)	AR	AR	AR
12	21-0578	Grub Screw, fixing for 60-7271	1	1	1
13	97-2266	Washer, for 21-0578	1	1	1
14	14-0237	Bolt, bottom lug stanchion fixing R/H	1		1
15	97-4476	Eye bolt, bottom lug stanchion fixing L/H	1	2	1
16	82-2184	Washer, for 14-0237 & 97-4476	2	2	2
17	14-1303	Nut, for 14-0237 & 97-4476	2	2	2
18	97-7034	Cap screw, for 97-4387	2	2	2
NI	97-4259	Label, for 97-7034	2	2	2
19	97-4387	Top nut, fixing main spring at stanchion	2	2	2
20	97-4011	Main spring	2	2	2
21	97-4380	Stancnion	2	2	2
22	97-4012	Nut, damper valve	2	2	2
23	97-4003	O'Ring, damper valve	2	2	2
24	97-4020	Damper valve	2	2	2
25	97-4010	Washer, for 97-4020	2	2	2
26	97-4325	Damper tube	2	2	2
27	97-4009	Spring, recoil - damper tube	2	2	2
28	97-4076	Plug, damper tube	2	2	2
29	97-4004	Washer, for 14-1019	2	2	2
30	97-1019	Screw, fixing damper valve	2	2	2
31	97-7114	Bracket, headlight mount L/H	1	1	1
32	97-7115	Bracket, headlight mount R/H	1	1	1
33	97-7119	Sleeve, headlight mounting brackets	4	4	4
NI	97-4166	Washer, for Ref. No. 19 Pt. No. 97-4387	2	2	2
40	97-4002	Scraper sleeve, stanchion	2	2	2
41	97-7146	Bottom member L/H	1	1	1
42	21-7116	Stud, caliper mounting L/H	2	2	
42	21-2189	Stud, caliper mounting L/H			2
43	60-7269	Circlip, retaining oil seal	2	2	2
44	97-7093	Retainer, oil seal	2	2	2
45	97-7079	Oil seal	2	2	2
46	21-2102	Stud, spindle cap	8	8	8
47	97-7147	Bottom member R/H	1		1
47	97-7158	Bottom member R/H		1	

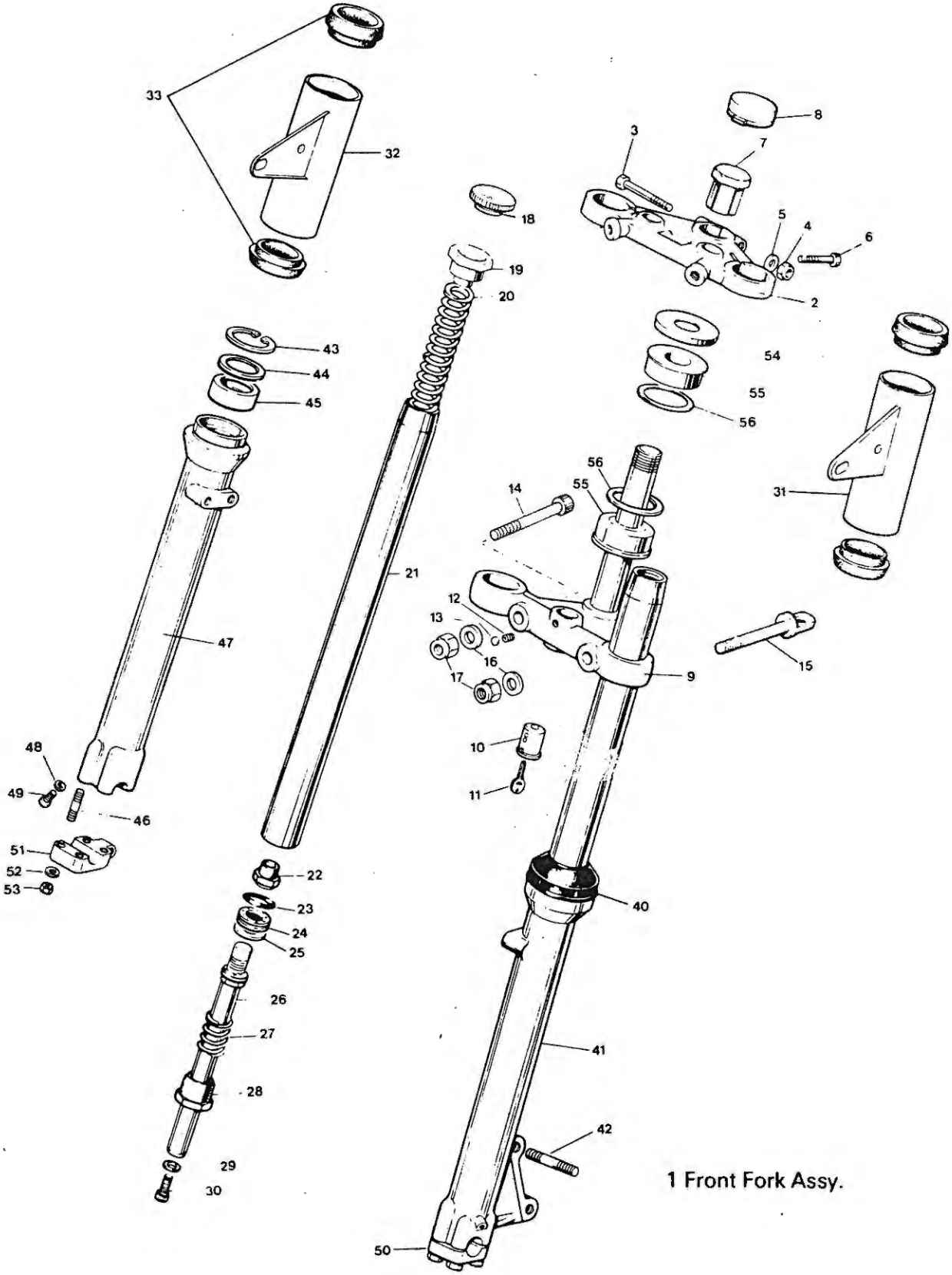

1 Front Fork Assy.

FRONT FORK ASSEMBLY (CONT.)

Ref. No.	Part. No.	Description	T140 E2S Qty Req	T140 LE Qty Req	T140 EX Qty Req
NI	21-7119	Bolt, caliper fixing R/H		2	
NI	60-2419	Washer, for 21-7119		2	
48	97-3893	Washer, for 97-3894	2	2	2
49	97-3894	Drain plug, bottom member	2	2	2

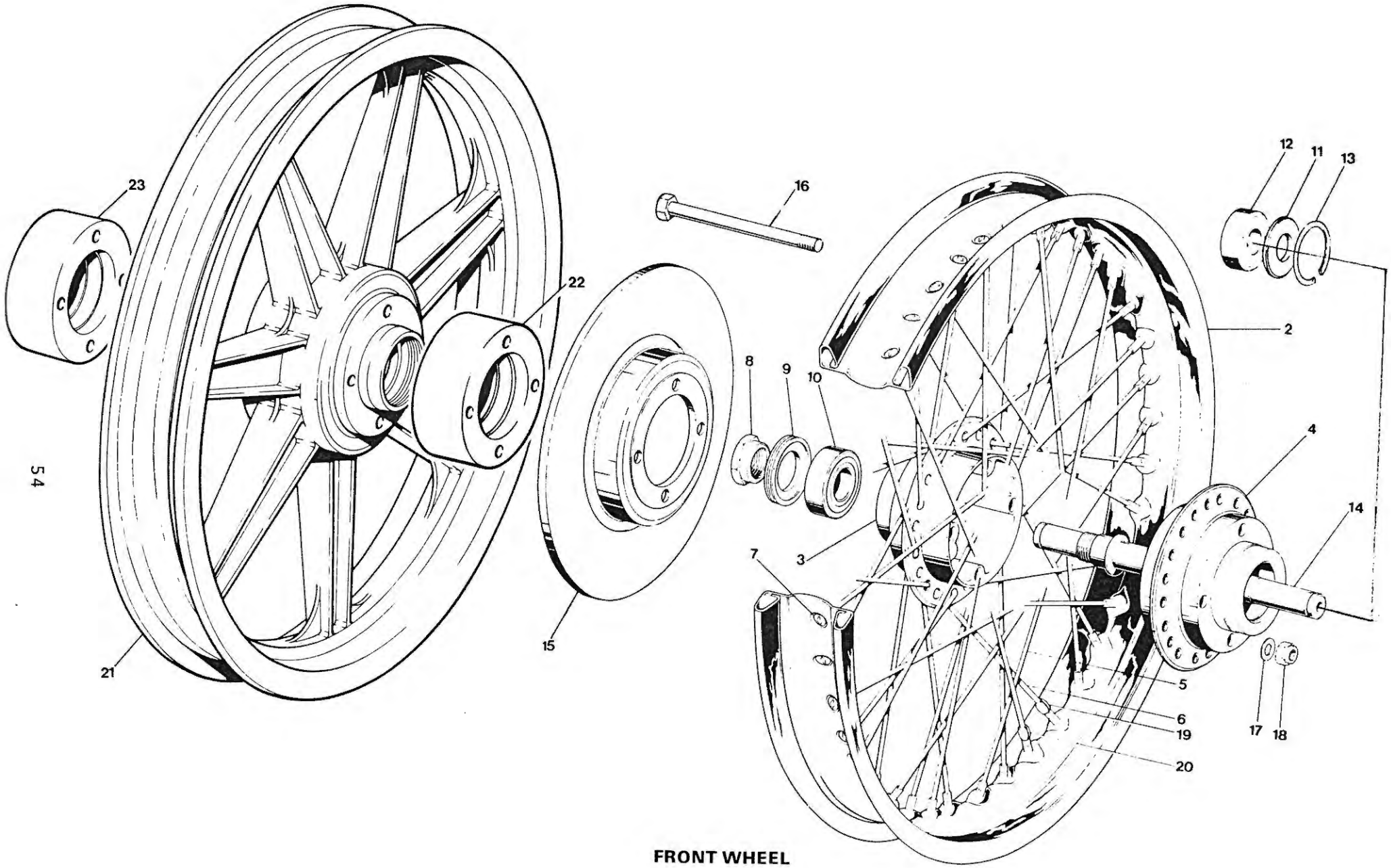

FRONT WHEEL

FRONT WHEEL

Ref. No.	Part No.	Description	T140 E2S Qty Req	LE	EX
1	37-7173	RIM, SPOKES AND HUB ASSEMBLY	1		1
2	37-4129	Rim - wm 2 X 19	1		1
3	37-7058	Hub - left half	1		1
4	37-7059	Hub - right half	1		1
5	37-4131	Spoke - outer	20		20
6	37-4130	Spoke - inner	20		20
7	37-2294	Nipple - spoke	40		40
8	37-4133	Nut, wheel spindle	1	1	1
9	37-4134	Lock ring - left	1	1	1
10	37-7041	Bearing - left	1	1	1
11	37-1237	Dust cover - right	1	1	1
12	37-7042	Bearing - right	1	1	1
13	57-0280	Circlip - right	1	1	1
14	37-4132	Spindle - wheel	1	1	1
15	37-7175	Disc - not chromed	1	1	1
16	21-2207	Bolt, disc to hub	4		4
16	21-7085	Bolt, disc to hub		4	
17	70-8770	Washer, for 21-2207 & 21-7085	8	8	8
18	14-1203	Nut, for 21-2207 & 21-7085	4	4	4
19	37-3969	Balance weight - short	AR		AR
20	37-3970	Balance weight - long	AR		AR
21	37-7183	Wheel, assy. cast alloy		1	
22	37-7161	Carrier, bearing - left		1	
23	37-7162	Carrier, bearing - right		1	

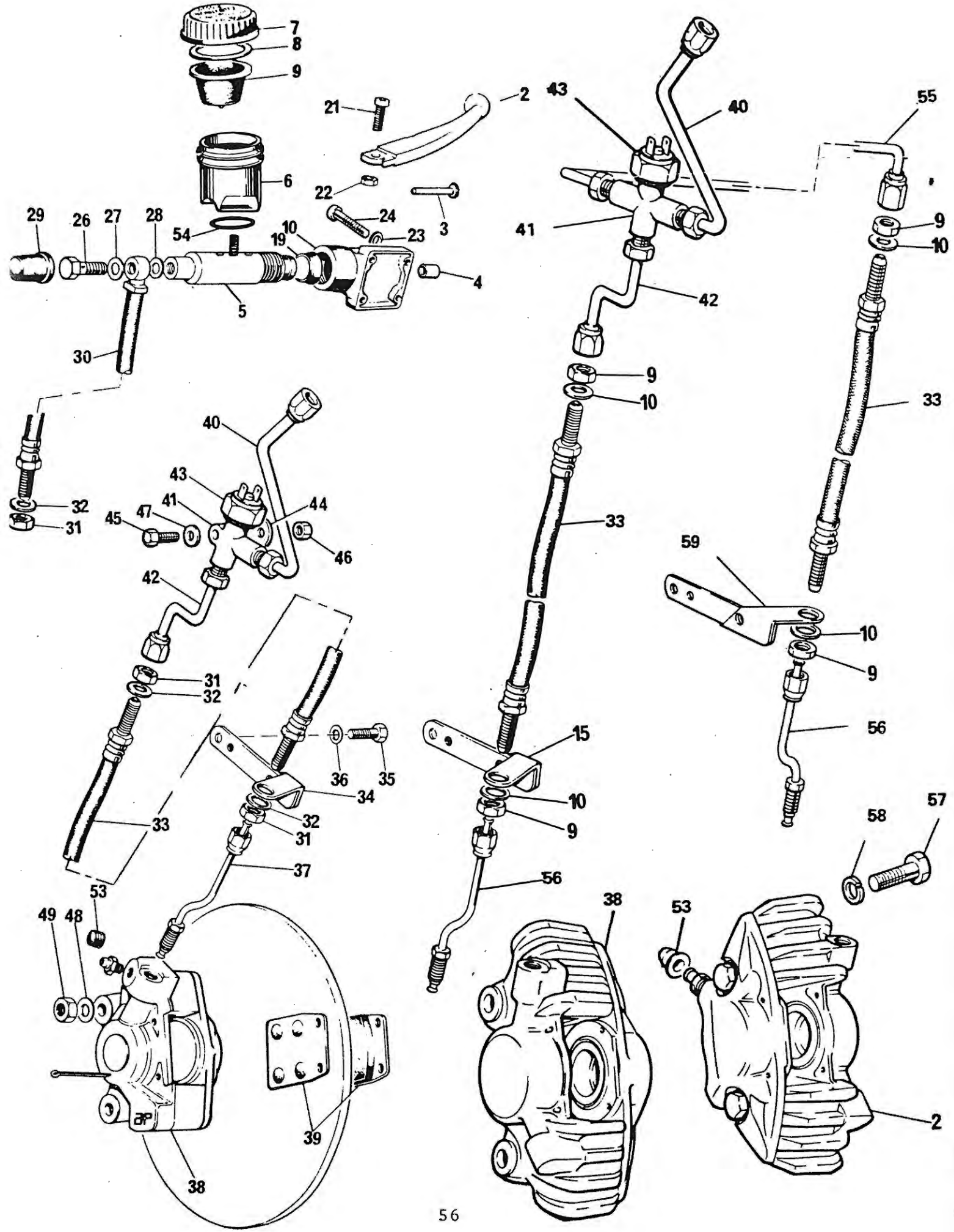
7
8
9
21
2
43
40
55
6
22
3
29
26
27
28
54
24
23
41
9
10
19
10
4
42
5
30
9
10
33
40
43
32
31
41
44
45
47
46
33
59
42
10
31
9
32
56
15
36
35
34
10
32
9
33
31
58
57
37
56
53
38
53
49
48
39
2
38

FRONT BRAKE

Ref. No.	Part No.	Description	T140 E2S Qty Req	LE	EX
1	60-7163	Master cylinder	1		1
1	60-7481	Master cylinder (dual disc)		1	
2	97-5074	Brake lever	1	1	1
3	60-7158	Push rod	1	1	1
4	60-7165	Bush, for 60-7158	1	1	1
5	99-7027	Barrel & stud	1	1	1
6	60-4397	Reservoir, body	1	1	1
7	60-4365	Cap, for 60-4397	1	1	1
8	60-4328	Washer	1	1	1
9	60-4366	Diaphragm, for 60-4397	1	1	1
10	60-7164	Master cylinder mounting body	1	1	1
21	21-2191	Screw, pivot for 97-5074	1	1	1
22	14-1201	Nut, for 21-2191	1	1	1
23	23-1555	Washer, for 21-7038	4	4	4
24	21-7038	Screw, fixing master cylinder body to switch	4	4	4
26	60-4183	Bolt, master cyl. hose at master cyl.	1	1	1
27	60-4182	Washer, for 60-4183 (outer)	1	1	1
28	60-4184	Washer, for 60-4183 (inner)	1	1	1
29	60-4186	Cover, for 60-4183	1	1	1
30	60-4174	Hose, master cylinder to top lug	1		
30	60-4177	Hose, master cylinder to top lug		1	1
31	60-4180	Locknut, for 60-4174 & 60-4177	3	5	3
32	70-2288	Washer, for 60-4174 & 60-4177	3	5	3
33	60-4175	Hose, bottom lug to bottom member	1	2	1
34	83-7064	Bracket, pipe support L/H bottom member to caliper	1	1	1
35	14-0103	Bolt, fixing for 83-7064 & 83-8062	4	4	4
36	60-2417	Washer, for 14-0103	4	4	4
37	60-4178	Pipe, bottom member to caliper L/H	1		1
38	60-7478	Caliper, L/H	1		1
38	60-7484	Caliper, L/H "Alloy"		1	
39	60-7437	Brake pad kit (pair)	1	2	1
40	60-7177	Pipe, top lug to junction L/H	1		1
40	60-7494	Pipe, top lug to junction L/H		1	
41	60-4176	Junction block (3 way) L/H	1		1
41	60-7482	Junction block (4 way) L/H		1	
42	60-7178	Pipe, junction to top lug L/H	1	1	1
43	34619	Switch, front brake stop	1	1	1
NI	70-1335	Washer, for 34619	1	1	1
44	97-7202	Bracket, mounting for 60-7176	1		1
44	97-7197	Bracket, mounting for 60-7482		1	
45	14-0105	Bolt, mounting for Ref. No. 44	1	1	1
46	14-1301	Nut, for 14-0105	1	1	1
47	60-2329	Washer, for 14-0105	1	1	1
48	60-2331	Washer, mounting caliper to btm. member	2	2	2
49	14-1303	Nut, mounting caliper to btm. member	2	2	2
53	60-4266	Cover, bleed nipple	1	2	1

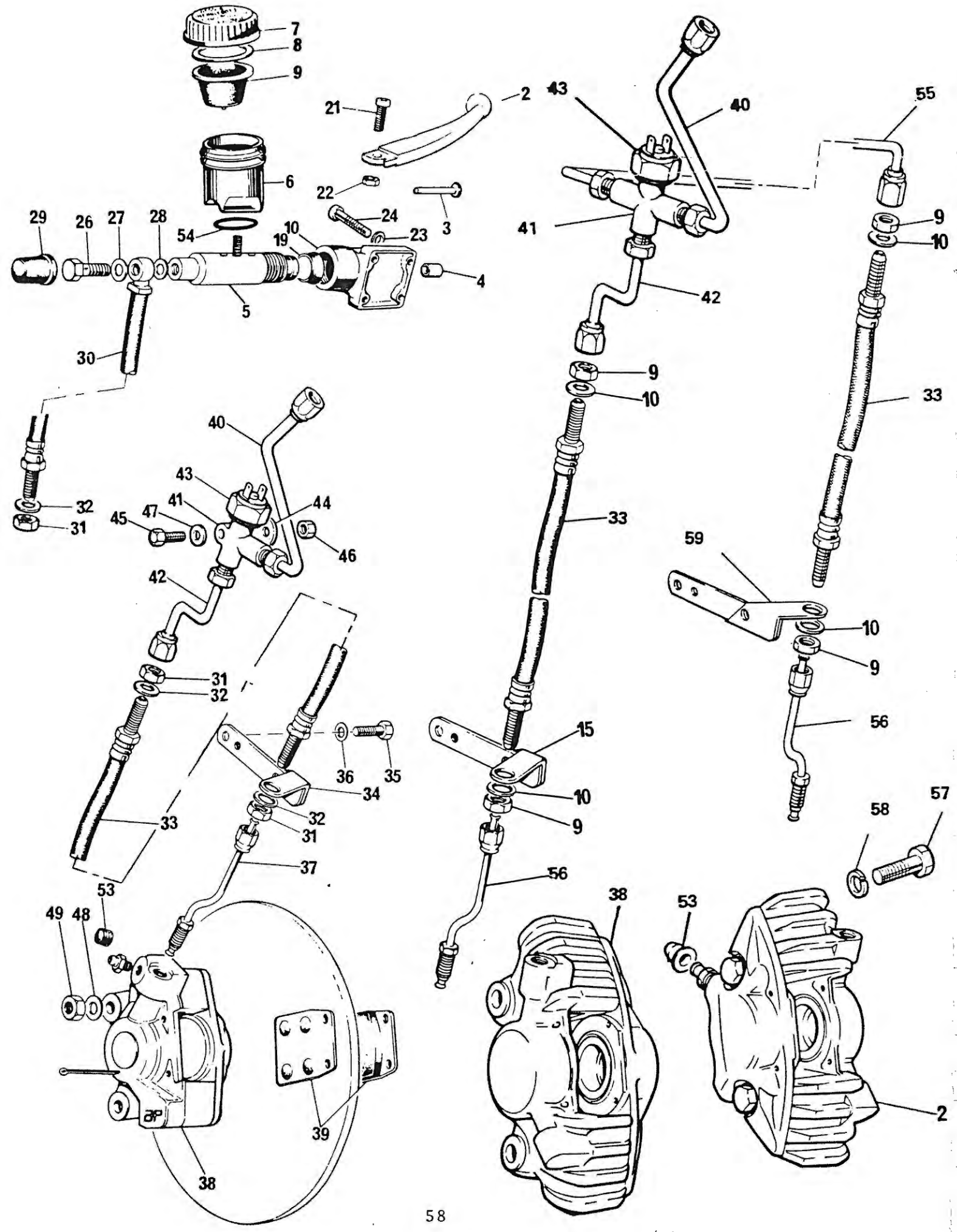
7
8
9
21
2
43
40
55
6
22
24
3
29
26
27
28
54
10
19
23
41
9
10
4
5
42
30
9
10
33
40
43
44
32
31
45
47
41
46
59
42
10
9
31
32
56
15
36
35
34
10
9
33
32
31
37
57
58
56
53
38
53
49
48
39
2
38

FRONT BRAKE (CONT.)

Ref. No.	Part No.	Description	T140 E2S Qty Req	T140 LE Qty Req	T140 EX Qty Req
54	60-4374	O'Ring, m/cyl. reservoir	1	1	1
55	60-7495	Connector pipe for R/H brake		1	
56	60-7496	Pipe, bottom member to caliper L/H & R/H		2	
57	21-7119	Bolt, caliper fixing R/H		2	
58	60-2419	Washer, for 21-7119		2	
59	83-8062	Bracket, pipe support R/H bottom member to caliper		1	
NI	99-7006	Caliper seal kit	1	2	1
NI	99-7022	Master cylinder seal kit	1		1

REF. 1 RIM, SPOKES AND HUB ASSEMBLY

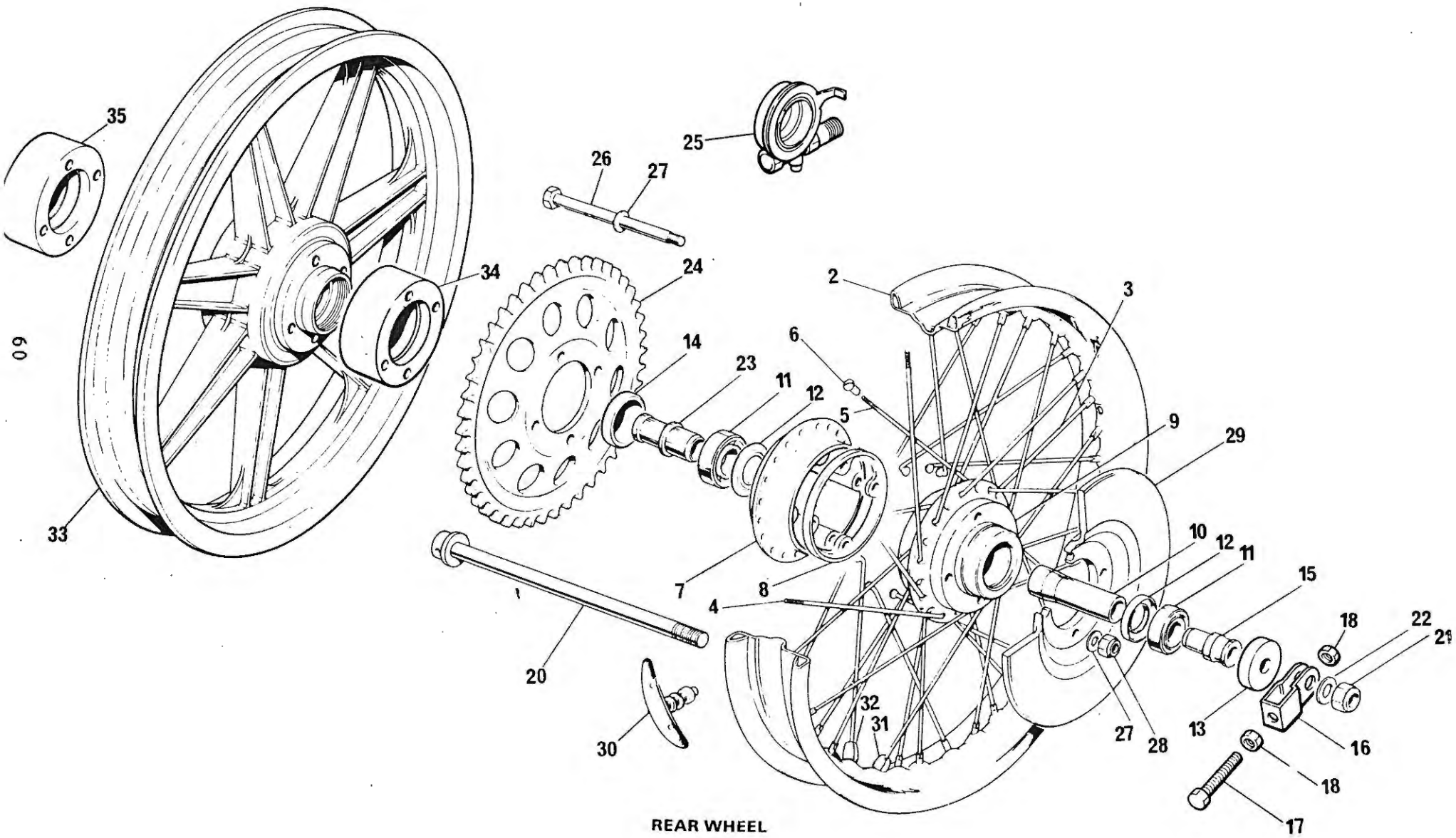

REAR WHEEL

REAR WHEEL

Ref. No.	Part No.	Description	T140 E2S Qty Req	LE	EX
1	37-7061	RIM SPOKE & HUB ASSEMBLY	1		1
2	37-7030	Rim, wm 3 X 18	1		1
3	37-7031	Spoke, inner	20		20
4	37-7032	Spoke, outer R/H	10		10
5	37-7033	Spoke, outer L/H	10		10
6	37-7034	Nipple spoke	40		40
7	37-7047	Hub, left	1		1
8	37-7063	Spacer, center hub	1		1
9	37-7062	Hub, right	1		1
10	37-7051	Spacer, bearing	1	1	1
11	37-7041	Bearing	2	2	2
12	37-4135	Locating shim	2	2	2
13	37-7055	Lockring R/H	1	1	1
14	37-7054	Cover, bearing R/H	1	1	1
15	37-7111	Spacer, bearing R/H	1	1	1
16	37-7127	Adjuster, rear chain	2	2	2
17	14-0118	Bolt, chain adjuster	2	2	2
18	14-0302	Nut, for 14-0118	4	4	4
20	37-7113	Spindle	1	1	1
21	14-1307	Nut, for 37-7113	1	1	1
22	83-2266	Washer, for 14-1307	1	1	1
23	37-7052	Spacer, bearing L/H	1	1	1
24	37-7072	Sprocket, rear chain 45 tooth	1	1	1
25	60-7091	Gearbox, speedo drive	1	1	1
26	21-7041	Bolt, disc & sprocket to hub	4	4	4
27	70-8770	Washer, for 21-7041	8	8	8
28	14-1203	Nut, for 21-7041	4	4	4
29	37-7175	Disc	1	1	1
30	37-3468	Security bolt, tire	1		1
31	37-3769	Balance weight - short	AR		AR
32	37-3770	Balance weight - long	AR		AR
33	37-7166	Rear wheel - "Cast Alloy"		1	
34	37-7163	Carrier, bearing L/H		1	
35	37-7164	Carrier, bearing R/H		1	

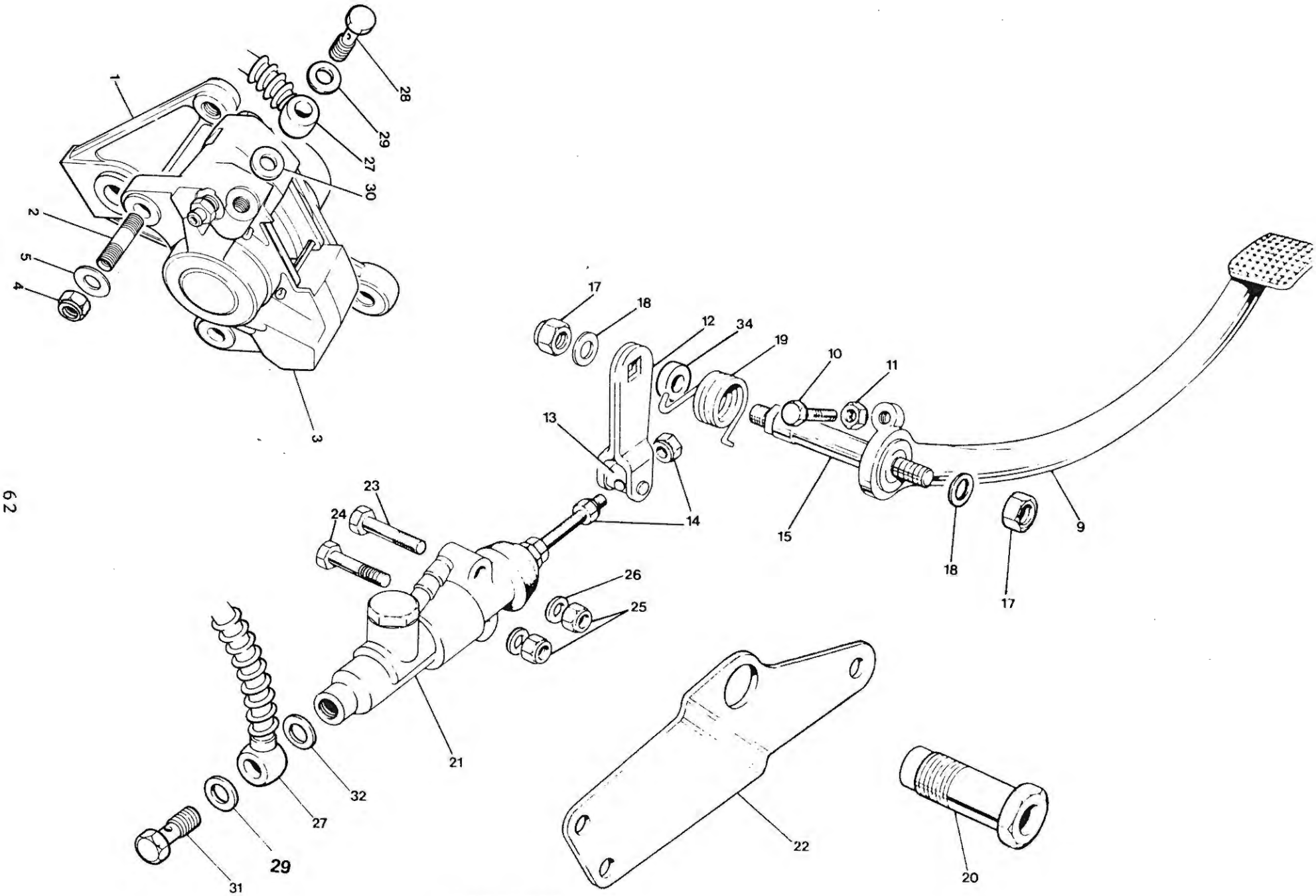
1
2
3
4
5
9
10
11
12
13
14
15
17
18
19
20
21
22
23
24
25
26
27
28
29
30
31
32
34

REAR BRAKE

REAR BRAKE

Ref. No.	Part No.	Description	T140 E2S Qty Req	T140 LE Qty Req	T140 EX Qty Req
1	37-7124	Plate, mounting rear caliper	1	1	1
2	21-7116	Stud, caliper to plate	2	2	2
3	60-7478	Caliper, rear	1	1	1
4	14-1303	Nut, for 21-7116	2	2	2
5	60-2331	Washer, for 14-1303	2	2	2
9	83-7560	Brake pedal	1	1	1
10	14-0103	Bolt, stop light switch adjusting	1	1	1
11	14-0301	Nut, for 14-0103	1	1	1
12	83-7003	Lever, m/cyl. to brake pedal	1	1	1
13	83-7024	Trunnion, for 83-7003	1	1	1
14	21-7006	Nut, adjuster for m/cyl.	2	2	2
15	83-7046	Spindle, rear brake pedal	1	1	1
17	14-1203	Nut, fixing for 83-7046	2	2	2
18	60-2331	Washer, for 14-1203	2	2	2
19	83-7016	Spring, brake pedal return	1	1	1
20	83-7163	Pivot bolt, rear brake pedal	1	1	1
21	60-7057	Master cylinder assembly	1	1	1
22	83-7567	Plate, m/cyl. mounting	1	1	1
23	14-0221	Bolt, m/cyl. mounting - upper	1	1	1
24	21-7007	Bolt, m/cyl. mounting - lower	1	1	1
25	14-1302	Nut, for 14-0221 & 21-7007	2	2	2
26	60-2330	Washer, for 14-1302	2	2	2
27	60-7233	Hose, caliper to m/cyl.	1	1	1
28	60-7236	Bolt, fixing hose at caliper	1	1	1
29	60-4184	Washer, for 60-7233 outer	2	2	2
30	37-7100	Washer, for 60-7236 inner	1	1	1
31	60-4183	Bolt, fixing hose at m/cyl.	1	1	1
32	60-4182	Washer, for 60-4183 inner	1	1	1
34	83-7015	Boss - spring retainer	1	1	1
NI	37-7094	Bush, caliper mounting plate	1	1	1

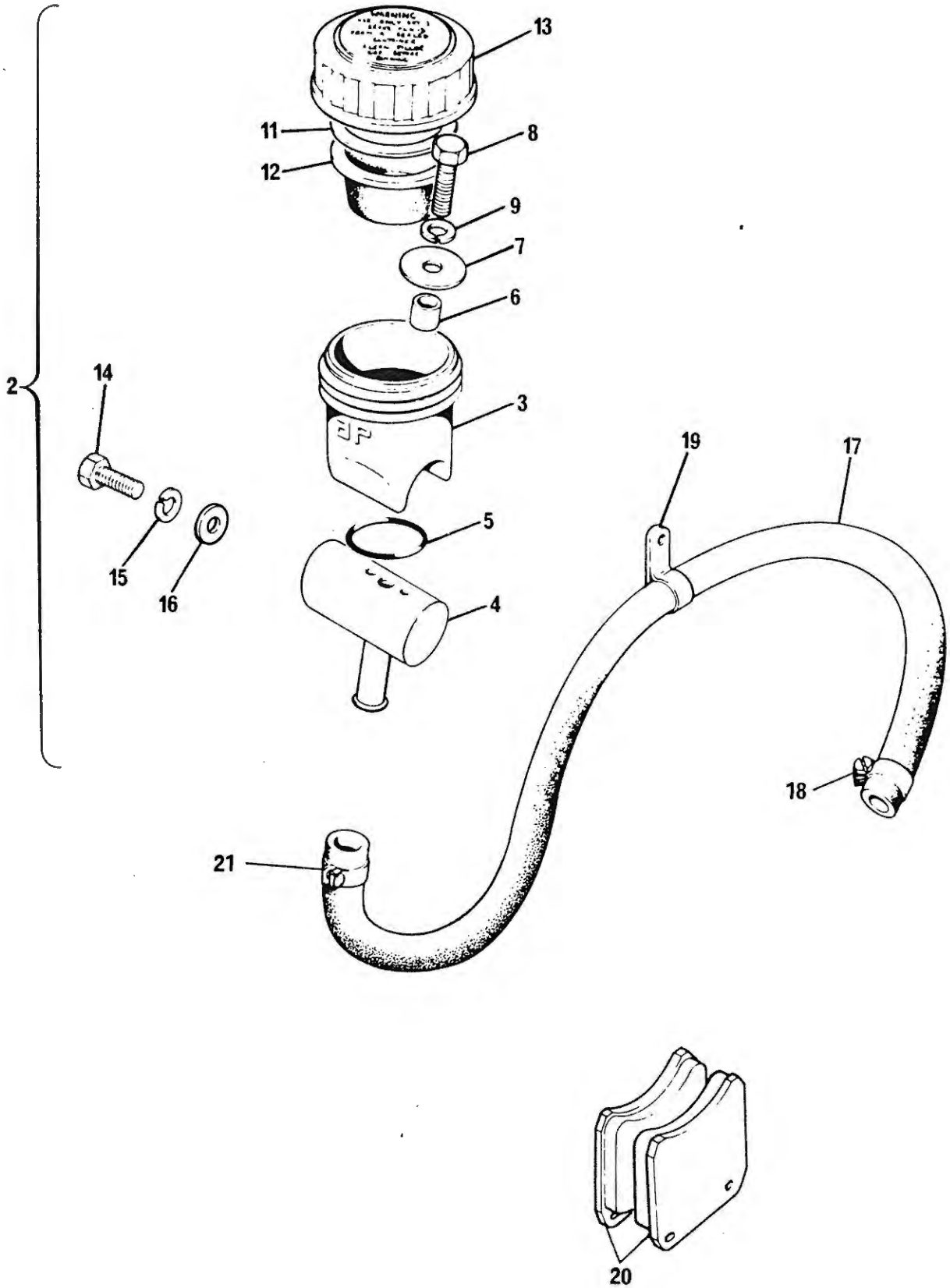

REAR BRAKE

REAR BRAKE

Ref. No.	Part No.	Description	T140 E2S Qty	LE Req	EX
2	83-7521	RESERVOIR ASSEMBLY - MASTER CYLINDER	1	1	1
3	60-4397	Body, reservoir	1	1	1
4	83-7501	Reservoir, mount	1	1	1
5	60-4374	O'Ring	1	1	1
6	83-7533	Spacer	1	1	1
7	60-4399	Washer	1	1	1
8	14-0102	Bolt, reservoir body to mount	1	1	1
9	60-2427	Washer, for 14-0102	1	1	1
11	60-4328	Gasket, for 60-4365	1	1	1
12	60-4366	Diaphram	1	1	1
13	60-4365	Filler cap	1	1	1
14	14-0101	Bolt, mounting to side panel	1	1	1
15	60-2427	Washer, for 14-0101	1	1	1
16	60-2338	Washer, for 14-0101	1	1	1
17	60-7248	Hose, reservoir to m/cyl.	1	1	1
18	60-7030	Clip, for 60-7248 at m/cyl.	1	1	1
19	60-7603	Clip for 60-7248	1	1	1
20	60-7437	Brake pad set	1pr	1pr	1pr
21	60-7524	Clip, for 60-7248 at reservoir	1	1	1
NI	99-7006	Caliper seal kit	AR	AR	AR
NI	99-7022	Master cylinder kit	AR	AR	AR

WARNING:-

Brake pad 60-7437 must only be used with plain cast iron disc Ref No 37-7175 Under no circumstances must these pads be used with chrome plated finished disc Ref No. 37-4275.

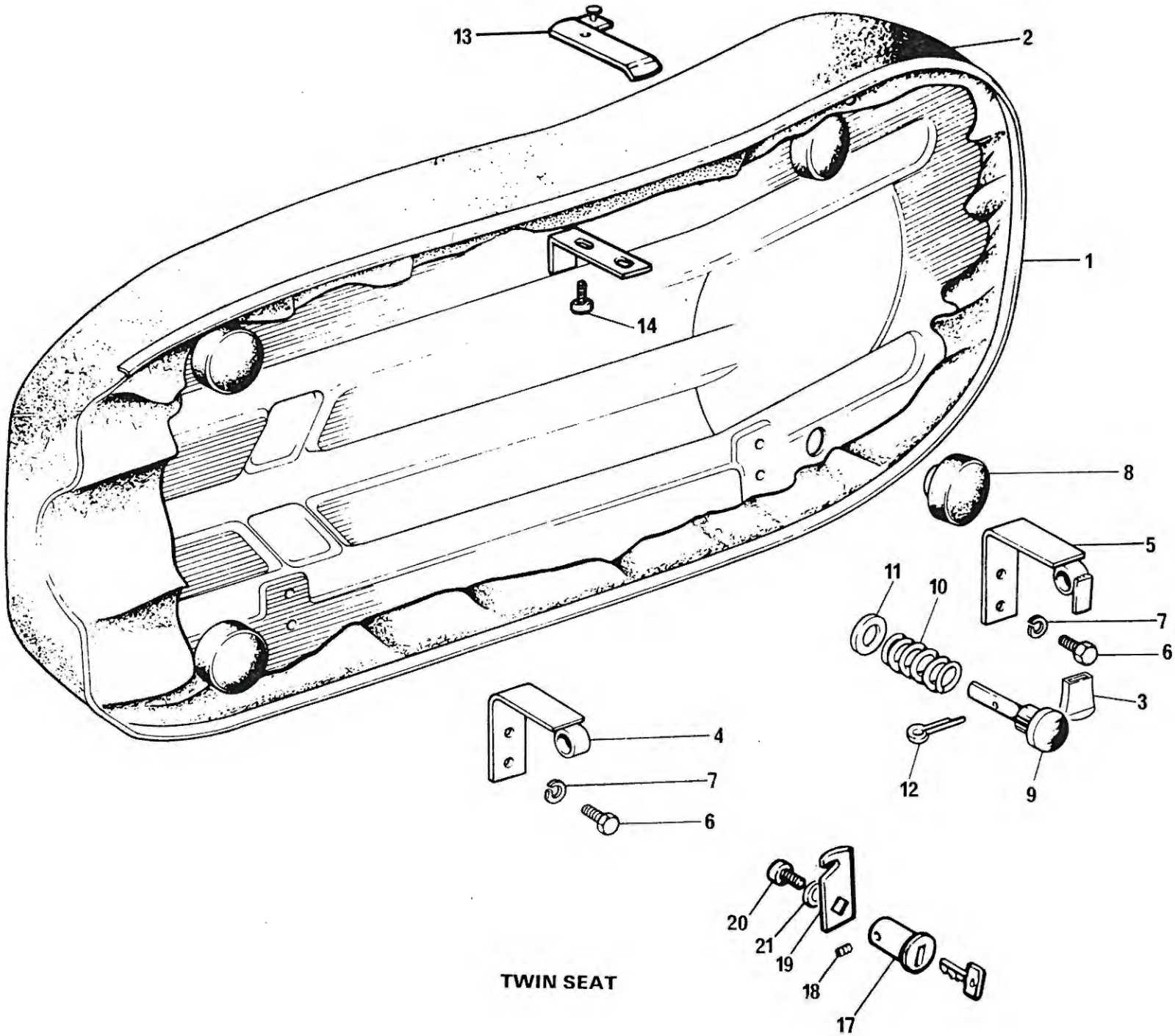

TWIN SEAT

TWINSEAT

Ref. No.	Part No.	Description	T140 E2S Qty	LE Req	EX
1	83-7893	TWINSEAT ASSEMBLY	1	1	
1	83-8072	TWINSEAT ASSEMBLY C/W STRAP			1
2	83-7599	Cover, twinseat	1	1	1
3	83-7544	Plastic sleeve, for 83-7542	1	1	1
4	83-4782	Hinge - front	1	1	1
5	83-7542	Hinge - rear	1	1	1
6	14-0101	Bolt, for 83-4782 & 83-7542	4	4	4
7	60-2417	Washer, for 14-0101	4	4	4
8	82-9093	Rubber buffer	4	4	4
9	82-7560	Plunger & knob	1	1	1
10	82-4228	Spring, for 82-7560	1	1	1
11	71-3749	Washer, for 82-7560	1	1	1
12	60-2720	Split pin, for 82-7560	1	1	1
13	83-7329	Catch plate, at seat lock	1	1	1
14	83-7276	Bolt, for 83-7328	1	1	1
NI	14-1301	Nut, for 83-7276	1	1	1
NI	60-2329	Washer, for 14-1301	1	1	1
17	60-7215	Lock, twinseat c/w 2 keys	1	1	1
18	21-7049	Screw, locking for 60-7215	1	1	1
19	83-7328	Catch plate, for seat lock	1	1	1
20	97-3894	Screw, fixing for 83-7328	1	1	1
21	97-1388	Washer, for 97-3894	1	1	1
NI	60-7071	Data label	1	1	1
NI	60-7159	Decal, neg. earth	1	1	1

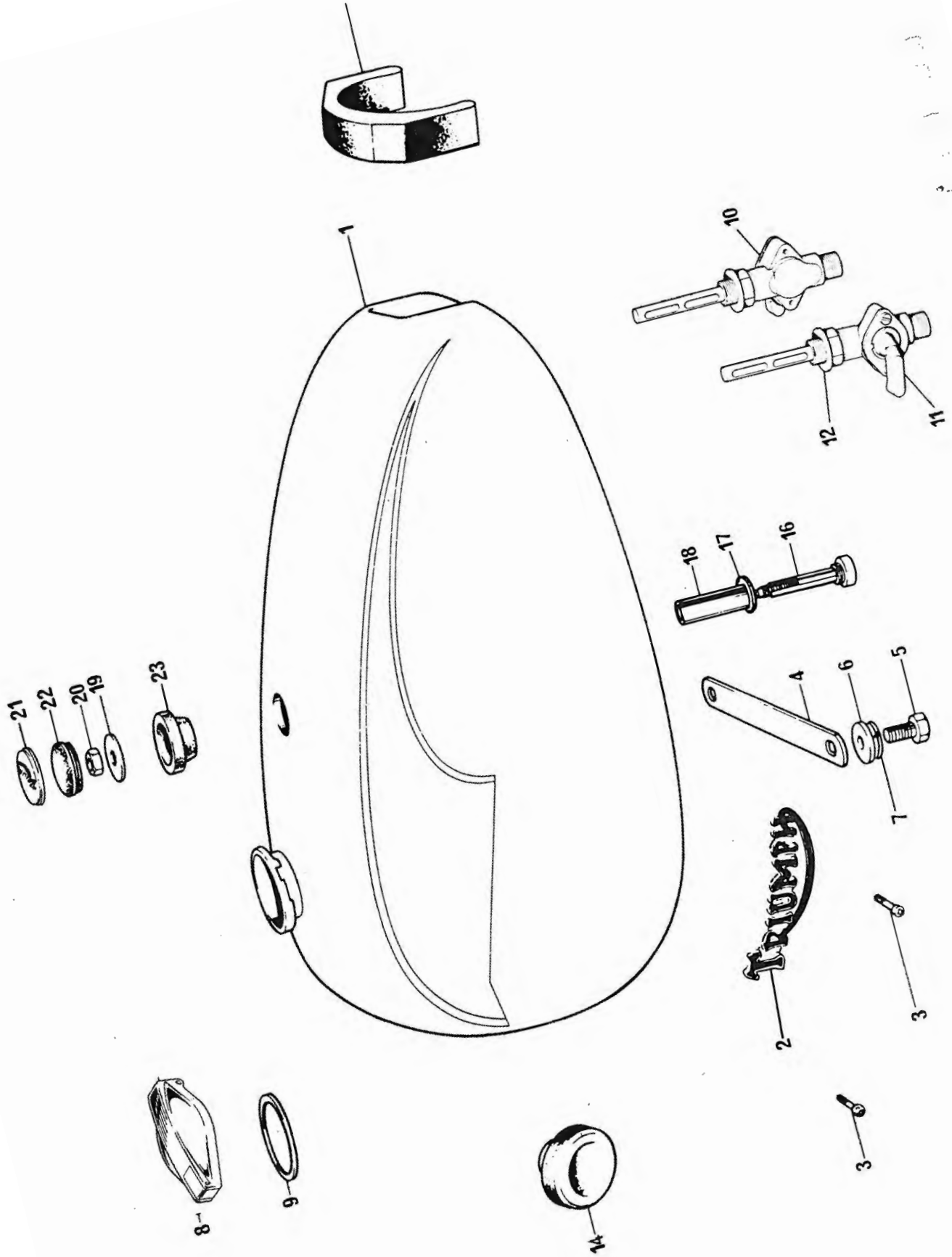

PETROL TANK

FUEL TANKS

Ref. No.	Part No.	Description	T140 E2S Qty Req	LE	EX
1	83-8085	Fuel tank - Smokey "Misty Red"	AR		
1	83-8086	Fuel tank - Smokey "Astral Blue"	AR		
1	83-8088	Fuel tank - Smokey "Candy Apple"			1
1	83-8173	Fuel tank - "Black - Gold Line"		1	
2	60-7304	Name plate - "Triumph" L/H	1		1
2	60-7305	Name plate - "Triumph" R/H	1		1
2	60-7537	Name plate - "Triumph" L/H		1	
2	60-7538	Name plate - "Triumph" R/H		1	
3	21-2064	Screw, for name plate - chrome	4		4
3	21-7048	Screw, for name plate - black		4	
4	83-4395	Tie strap	1	1	1
5	14-0115	Bolt, for 83-4395	2	2	2
6	60-2321	Washer, for 14-0115 plain	2	2	2
7	60-2428	Washer, for 14-0115 lock	2	2	2
8	60-7552	Filler cap - w/lock	1	1	1
9	82-4048	Gasket, for 60-7552	1	1	1
10	60-7508	Fuel tap L/H	1	1	1
11	60-7509	Fuel tap R/H	1	1	1
NI	83-7970	Adaptor, fuel tap at fuel tank	2	2	2
12	70-7351	Bonded washer, for fuel taps	2	2	2
14	83-4931	Steady rubber, fuel tank	2	2	2
15	83-4932	Mounting rubber, fuel tank	2	2	2
16	83-4930	Bolt, fuel tank fixing - center	1	1	1
17	60-2330	Washer, for 83-4930 - lower	1	1	1
18	82-9063	Spacer tube for 83-4930	1	1	1
19	82-3814	Washer, for 83-4930 upper	1	1	1
20	14-0302	Nut, fixing for 83-4930	1	1	1
21	83-4776	Badge, fuel tank - center	1	1	1
22	97-5061	Grommet, for 83-4776	1	1	1
23	83-4934	Rubber, center fuel tank mounting	1	1	1
NI	82-8245	Washer, retaining 83-4930 to frame	1	1	1

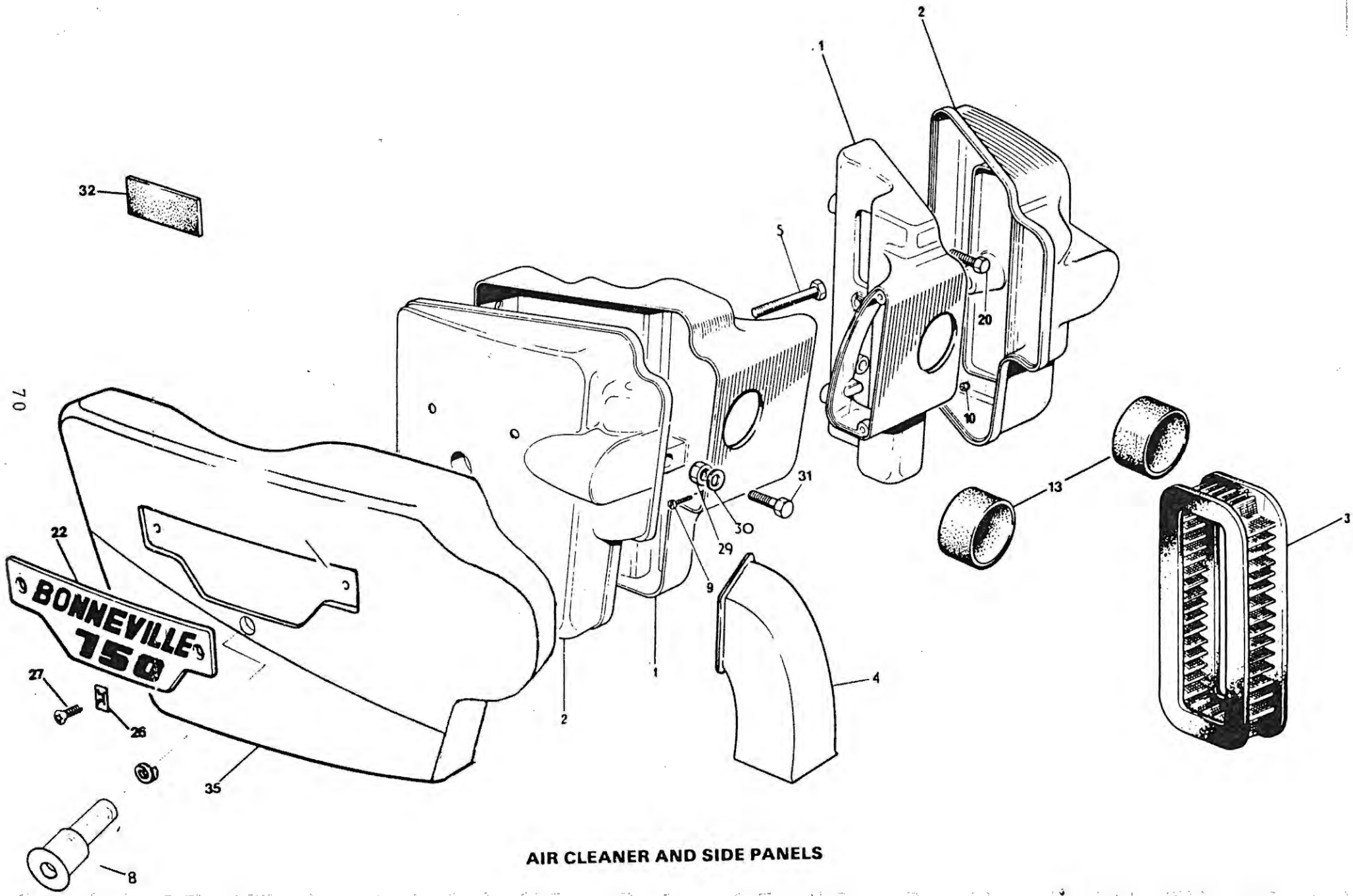

AIR CLEANER AND SIDE PANELS

AIR CLEANER & SIDE PANELS

Ref. No.	Part No.	Description	T140 E2S Qty Req	LE	EX
1	83-7904	Body, air cleaner L/H	1	1	1
1	83-7907	Body, air cleaner R/H	1	1	1
2	83-7905	Cover, air cleaner L/H	1	1	1
2	85-7908	Cover, air cleaner R/H	1	1	1
3	60-4265	Element air cleaner	2	2	2
4	83-5448	Tube, air intake L/H	1	1	1
4	83-5449	Tube, air intake R/H	1	1	1
5	14-0221	Bolt, body to cover	2	2	2
6	82-8245	Washer, retaining for 14-0221	2	2	2
7	60-2438	Washer, locking for 14-0221	2	2	2
NI	70-1465	Washer, for 21-7114	2	2	2
8	21-7114	Nut, panel fixing	2	2	2
NI	60-7456	Cap, for 21-7114	2	2	2
NI	83-7910	Rubber washer, panel fixing	2	2	2
NI	60-7397	Retainer, for 83-7910	2	2	2
9	60-3539	Screw, fixing L/H to R/H body	2	2	2
10	21-0501	Nut, for 60-3539	2	2	2
13	71-7527	Connector, carb. to air box	2	2	2
NI	2928/146	Clip, for 71-7527	2	2	2
22	83-7316	Nameplate, for "Misty Red"	2		
22	83-7252	Nameplate, for "Astral Blue"	2		
22	83-7317	Nameplate, for "Executive"			2
22	83-8182	Nameplate, for "Royal"		2	
26	21-7020	Nut, for 82-4129	4	4	4
27	82-4129	Screw, fixing nameplate	4	4	4
29	14-1302	Nut, for 14-0218	2	2	2
30	60-2321	Washer, for 14-0218	2	2	2
31	14-0218	Bolt, air box to frame	2	2	2
32	82-7380	Rubber pad - under styling panel	2	2	2
34	83-7958	Panel, styling L/H "Misty Red"	1		
35	83-7959	Panel, styling R/H "Misty Red"	1		
34	83-7961	Panel, styling L/H "Astral Blue"	1		
35	83-7962	Panel, styling R/H "Astral Blue"	1		
34	83-8174	Panel, styling L/H "Black - Gold Line"		1	
35	83-8175	Panel, styling R/H "Black - Gold Line"		1	
34	83-8073	Panel, styling L/H "Executive Red"			1
35	83-8074	Panel, styling R/H "Executive Red"			1
NI	60-7386	Decal, "Electro"	2	2	2
NI	60-7364	Decal, "Limited Edition"		2	2

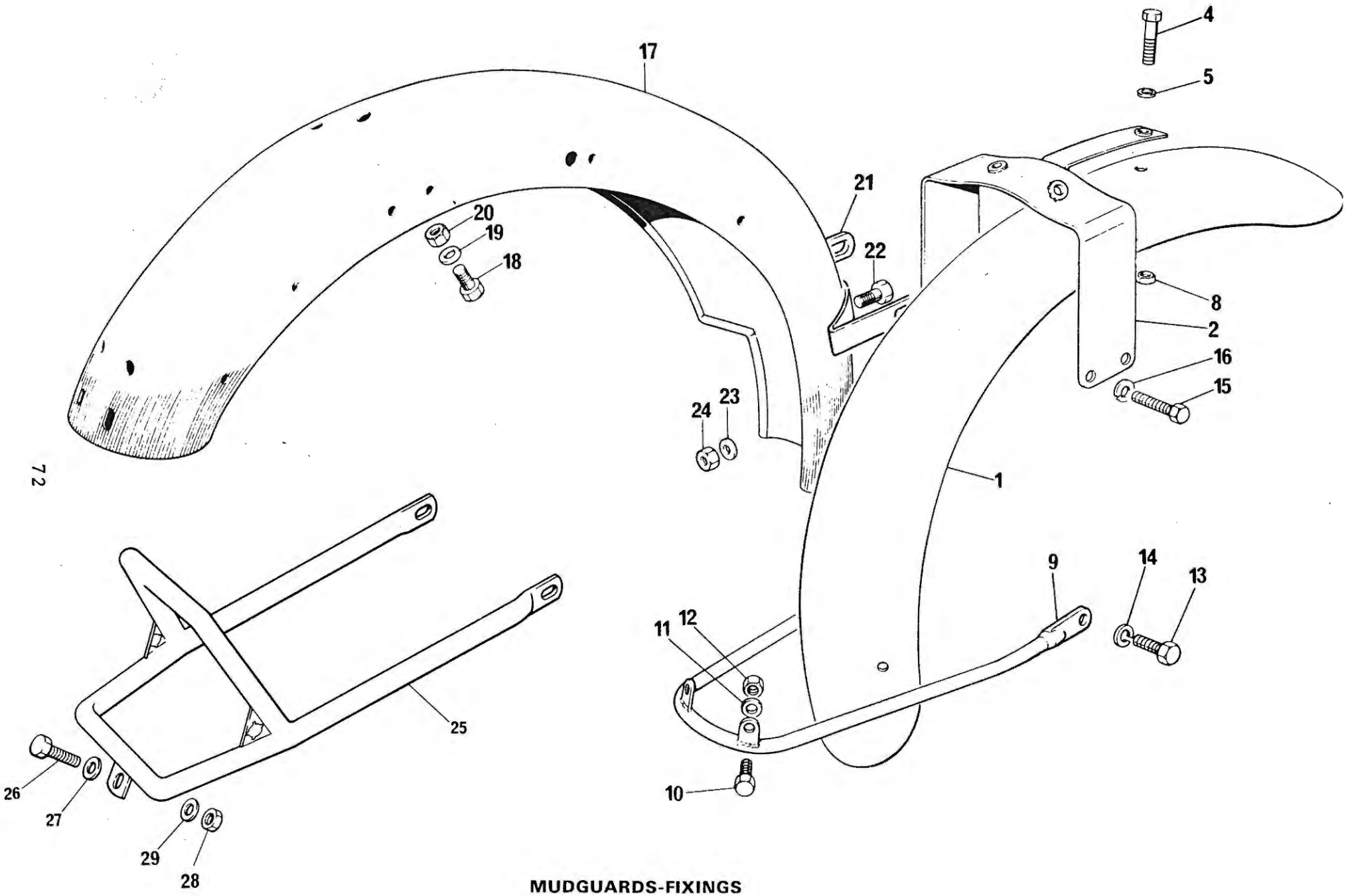

MUDGUARDS-FIXINGS

FENDERS & FITTINGS

Ref. No.	Part No.	Description	T140 E2S Qty	LE Req.	EX
1	97-7138	Fender, front - stainless steel	1	1	
1	97-7126	Fender, front - executive red			1
2	97-7004	Bridge, front fender	1	1	1
4	14-2205	Screw, fixing front fender to bridge	3	3	3
5	21-7025	Washer, for 14-2205	3	3	3
8	21-7050	Nut, for 14-2205	3	3	3
9	97-4552	Rear stay, front fender to btm member cap	1	1	1
10	14-0101	Bolt, fixing-rear stay to front fender	2	2	2
11	60-4245	Washer, for 14-0101	2	2	2
12	14-1201	Nut, for 14-0101	2	2	2
13	14-6114	Bolt, rear stay to bottom member cap	2	2	2
14	60-2428	Washer, for 14-6114	2	2	2
15	14-0103	Bolt, bridge to bottom member	4	4	4
16	60-2427	Washer, for 14-0103	4	4	4
17	83-8030	Fender, rear - stainless steel	1	1	
17	83-7759	Fender, rear - executive red			1
18	14-0101	Bolt, fixing rear fender to seat loop	2	2	2
19	60-2329	Washer, for 14-0101	2	2	2
20	14-1301	Nut, for 14-0101	2	2	2
21	83-2796	Bracket, rear fender-lower front to frame	1	1	1
22	14-0114	Bolt, fixing for 83-2796	2	2	2
23	60-2330	Washer, for 14-0114	2	2	2
24	14-1302	Nut, for 14-0114	2	2	2
25	83-7555	Grab rail	1	1	
26	14-0102	Bolt, fixing-grab rail to rear fender	1	1	1
27	60-2329	Washer, for 14-0102	1	1	1
28	14-1301	Nut, for 14-0102	1	1	1
29	21-7025	Washer, for 14-0102	2	2	2
NI	97-2209	Washer, coil tray to rear fender	1	1	1

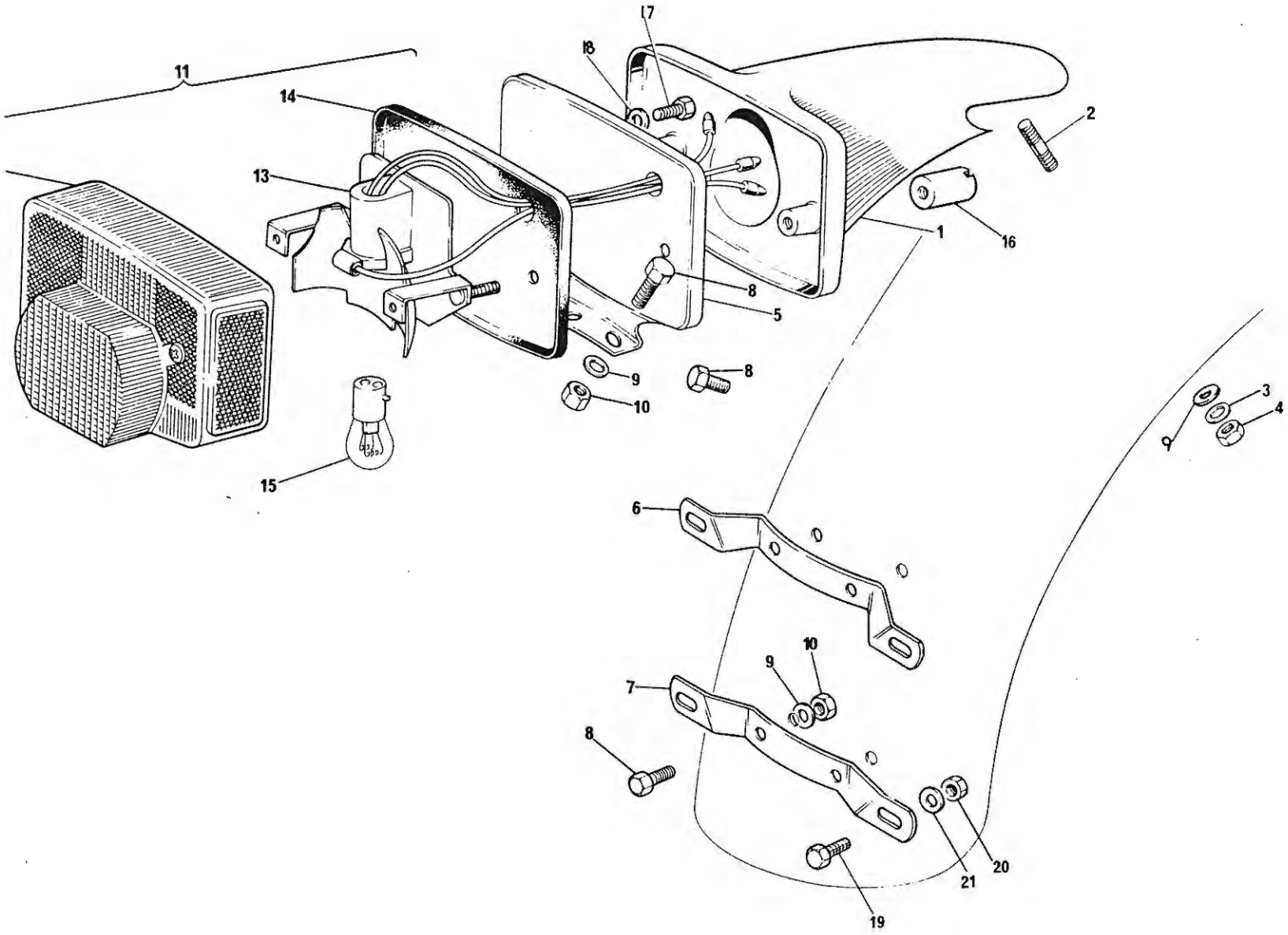

C 50

TAIL LAMP AND SUPPORT

TAIL LAMP & SUPPORT

Ref. No.	Part No.	Description	T140 E2S Qty Req	LE	EX
1	83-7094	Carrier, tail light	1	1	1
2	21-2225	Stud, carrier to rear fender	1	1	1
3	60-4250	Washer, for 21-2225	1	1	1
4	14-0301	Nut, for 21-2225	1	1	1
5	83-5001	Support plate, tail light to carrier	1	1	1
6	83-4784	Bracket, No. plate - top	1	1	1
7	82-6850	Bracket, No. plate - bottom	1	1	1
8	14-0102	Bolt, fixing for Ref. No.(s) 5, 6, 7	4	4	4
9	60-2329	Washer, for 14-0102	4	4	4
10	14-1301	Nut, for 14-0102	4	4	4
11	56513	TAIL LIGHT ASSEMBLY	1	1	1
12	54584930	Lens	1	1	1
13	54584931	Base assembly	1	1	1
14	54583924	Gasket	1	1	1
15	380	Bulb	1	1	1
16	83-4800	Sleeve nut, light to carrier	2	2	2
17	14-7804	Screw, support plate to carrier	2	2	2
18	70-1612	Washer, for 14-7804	2	2	2
19	14-0101	Bolt, No. plate attachment	4	4	4
20	14-1301	Nut, for 14-0101	4	4	4
21	60-2329	Washer, for 14-0101	4	4	4
NI	83-4806	Wiring protector	1	1	1
NI	60-4103	Grommet, flasher wire	1	1	1
NI	83-5105	Grommet, light carrier	2	2	2
NI	97-0961	Grommet, fender for wiring	2	2	2
NI	60-4440	Grommet, flasher leads	2	2	2
NI	60-4256	Washer, for Ref. No. 16	2	2	2

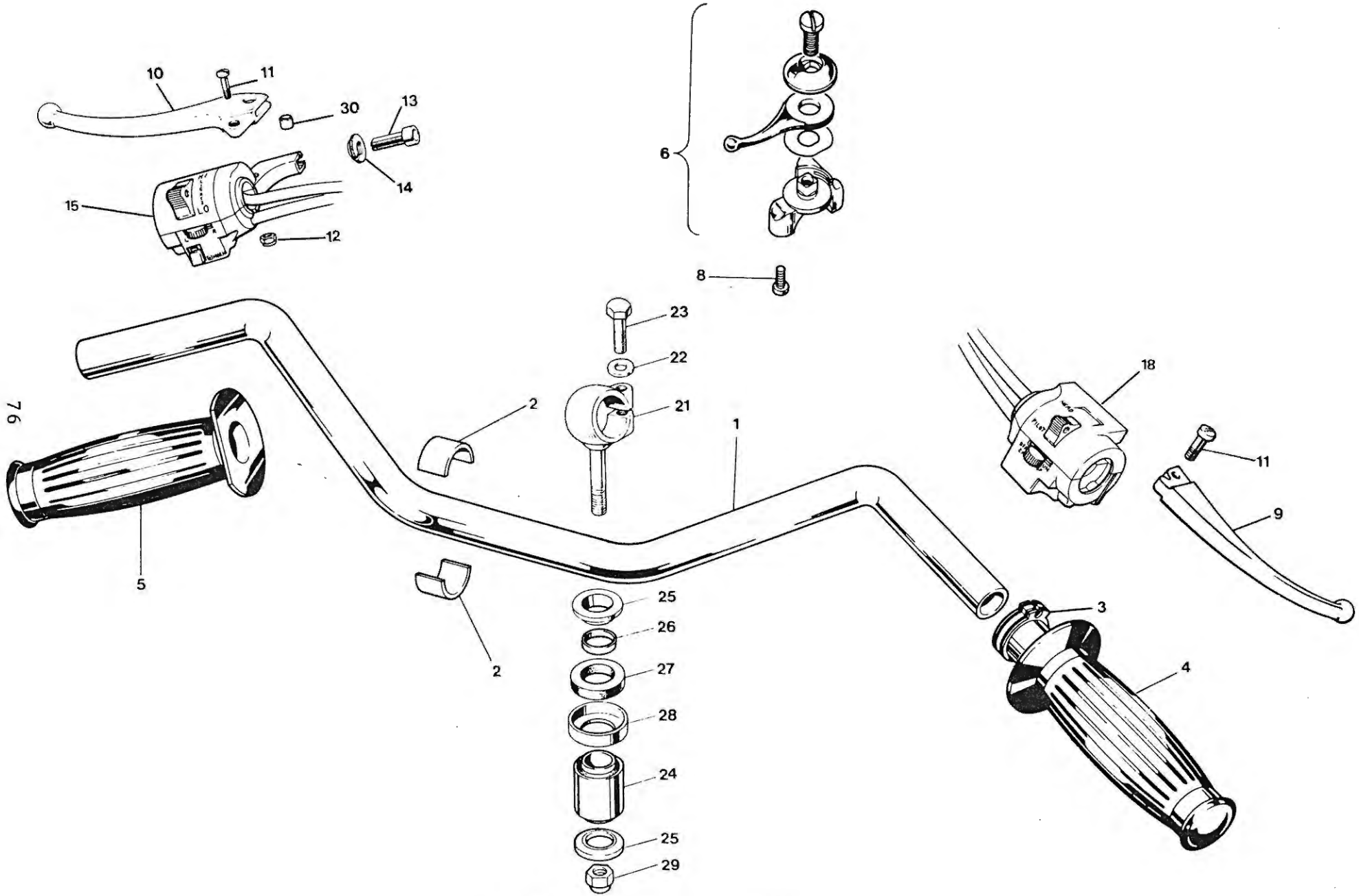

HANDLEBARS AND CONTROL LEVERS

HANDLEBARS & CONTROL LEVERS

Ref. No.	Part No.	Description	T140 E2S Qty	LE Req	EX
1	97-7041	Handlebar		1	1
1	97-7205	Handlebar	1		
2	97-1425	Sleeve, handlebar mounting	4	4	4
3	60-7144	Throttle assy.	1	1	1
4	97-2125	Grip, R/H	1	1	1
5	97-2142	Grip, L/H	1	1	1
6	60-3246	Control lever assy. - cold start	1	1	1
NI	60-7024	Clip, fixing lever to handlebar	1	1	1
8	11/014	Screw, for 60-7024	2	2	2
9	97-5074	Lever, front brake	1	1	1
10	97-7035	Lever, clutch	1	1	1
11	21-7036	Pivot pin - clutch lever	1	1	1
11	21-2191	Pivot pin - brake lever	1	1	1
12	14-1901	Nut, for 21-7036 & 21-2191	2	2	2
13	60-3585	Adjuster - clutch cable	1	1	1
14	60-3586	Nut, for 60-3585	1	1	1
15	60-7464	Switch, handlebar L/H	1	1	1
18	60-7462	Switch, handlebar c/w start button R/H	1	1	1
21	97-2291	Eyebolt, handlebar mounting	2	2	2
22	82-1335	Washer, for 97-2291	2	2	2
23	21-0589	Bolt, for 97-2291	2	2	2
24	97-1527	Bush, eyebolt to top lug	2	2	2
25	97-1529	Washer, eyebolt to top lug	4	4	4
26	97-1581	Spacer, eyebolt to top lug	2	2	2
27	97-1580	Rubber, eyebolt to top lug	2	2	2
28	97-2221	Cup, for 97-1580	2	2	2
29	14-1303	Nut, fixing eyebolt to top lug	2	2	2
30	97-7053	Pivot bush - clutch lever	1	1	1
NI	60-7249	Mirror, L/H & R/H	2	2	2
NI	83-7109	Spacer for mirror			2
NI	37-2331	Washer, for mirror at fairing			2
NI	60-7201	Cable tie, cables to handlebars	4	2	2

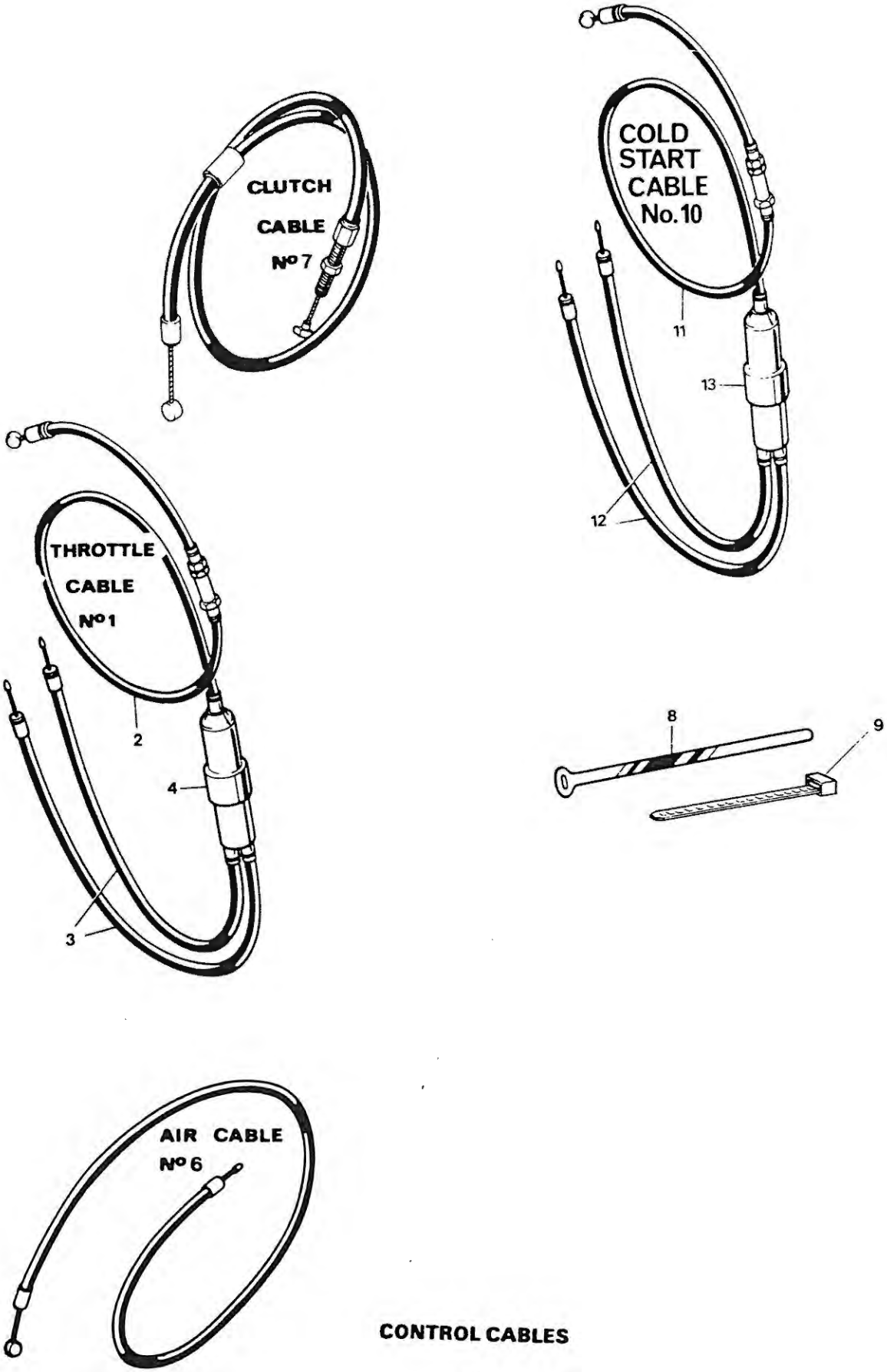

CONTROL CABLES

CONTROL CABLES

Ref. No.	Part No.	Description	T140 E2S Qty	LE Req	EX
1	60-7550	THROTTLE CABLE ASSEMBLY	1		
1	60-7506	THROTTLE CABLE ASSEMBLY		1	1
2	60-7427	Cable, throttle to junction box	1		
2	60-7489	Cable, throttle to junction box		1	1
3	60-7505	Cable, junction box to carb.	2	2	2
4	244/104	Junction box	2	2	2
7	60-3925	Clutch cable	1		
7	60-4168	Clutch cable		1	1
8	60-4254	Cable tie	8	8	8
9	60-7202	Cable tie	21	21	21
10	60-7551	CHOKE CABLE ASSEMBLY	1		
10	60-7507	CHOKE CABLE ASSEMBLY		1	1
11	60-7430	Cable, choke lever to junction box	1		
11	60-7504	Cable, choke lever to junction box		1	1
12	60-7505	Cable, junction box to carb.	2	2	2
NI	60-0777	Cable tie	AR	AR	AR
NI	60-0978	Cable tie	AR	AR	AR
NI	60-7567	Elbow, for throttle cables	AR	AR	AR
NI	60-7202	Cable tie	AR	AR	AR

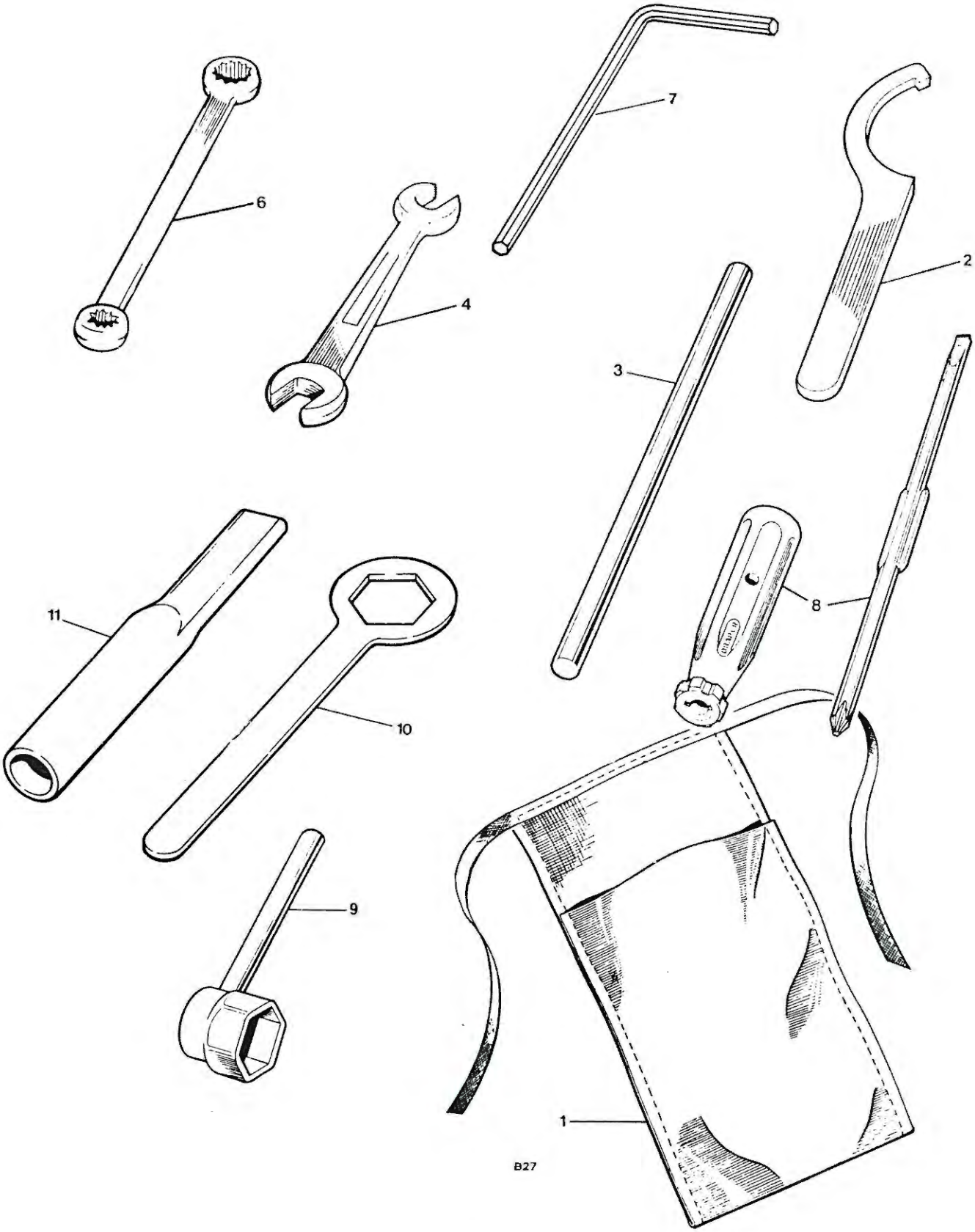

TOOLKIT

TOOLKIT

Ref. No.	Part No.	Description	T140 E2S Qty Req	T140 LE Qty Req	T140 EX Qty Req
1	60-7166	TOOLKIT COMPLETE	1	1	1
1	60-0291	Tool roll	1	1	1
2	60-2184	Damper unit spanner	1	1	1
3	60-7041	Tommy bar, for rear wheel	1	1	1
4	60-2084	Spanner - open end	1	1	1
6	60-1907	Ring spanner	1	1	1
7	60-7167	Key for hex socket screw	1	1	1
8	60-0767	Screw driver	1	1	1
9	60-1050	Plug spanner	1	1	1
10	60-7068	Rear wheel spanner	1	1	1
11	60-7069	Lever for spanner	1	1	1

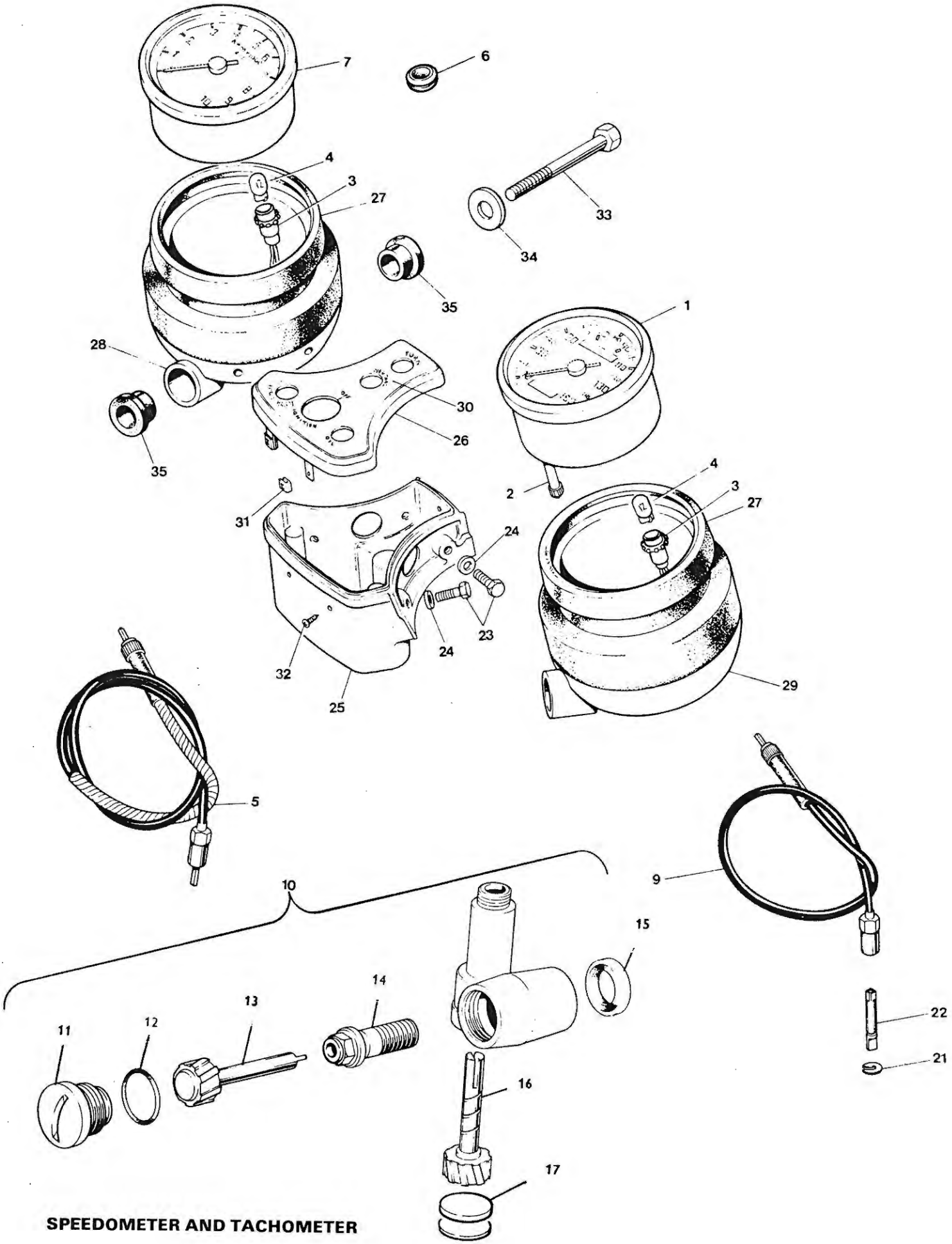

SPEEDOMETER AND TACHOMETER

SPEEDOMETER & TACHOMETER

Ref. No.	Part No.	Description	T140 E2S Qty	LE Req	EX
1	60-7272	Speedometer head	1	1	1
2	60-7207	Stem, trip control speedometer	1	1	1
3	51271406	Bulb holder	2	2	2
4	504	Bulb	2	2	2
5	60-7306	Cable, speedometer drive	1	1	1
6	60-7221	Grommet, bulb holder	2	2	2
7	60-7223	Tachometer head	1	1	1
9	60-0578	Cable, tachometer drive	1	1	1
10	71-7011	Tachometer gearbox assembly	1		1
10	71-7609	Tachometer gearbox assembly - black		1	
11	71-2480	Plug, tach. gearbox	1		1
11	71-7611	Plug, tach. gearbox		1	
12	60-3355	O'Ring, for Ref. No. 11	1	1	1
13	70-5157	Driving gear - tach	1	1	1
14	70-9332	Securing screw assy.	1	1	1
15	71-7012	Thrust cap	1	1	1
16	71-2653	Driven gear - tach	1	1	1
17	71-2481	Welch plug	1	1	1
21	60-0494	Circlip, for 99-0173	1	1	1
22	99-0173	Spade, tach drive	1	1	1
23	14-6104	Bolt, carrier to switch box	4	4	4
24	60-2427	Washer, for 14-6104	4	4	4
25	97-4577	Switch box	1	1	1
26	97-5000	Panel, switch box	1	1	1
27	97-4573	Cup, instrument carrier	2	2	2
28	97-4574	Carrier, tachometer	1	1	1
29	97-4575	Carrier, speedometer	1	1	1
30	60-4622	Identification sheet	1	1	1
31	60-4503	Spire nut, for 21-0762	3	3	3
32	21-0762	Screw, fixing - panel to switch box	3	3	3
33	14-0235	Bolt, fixing - carrier to top lug	2	2	2
34	60-2340	Washer, for 14-0235	2	2	2
35	97-4588	Rubber bush, for carrier	4	4	4

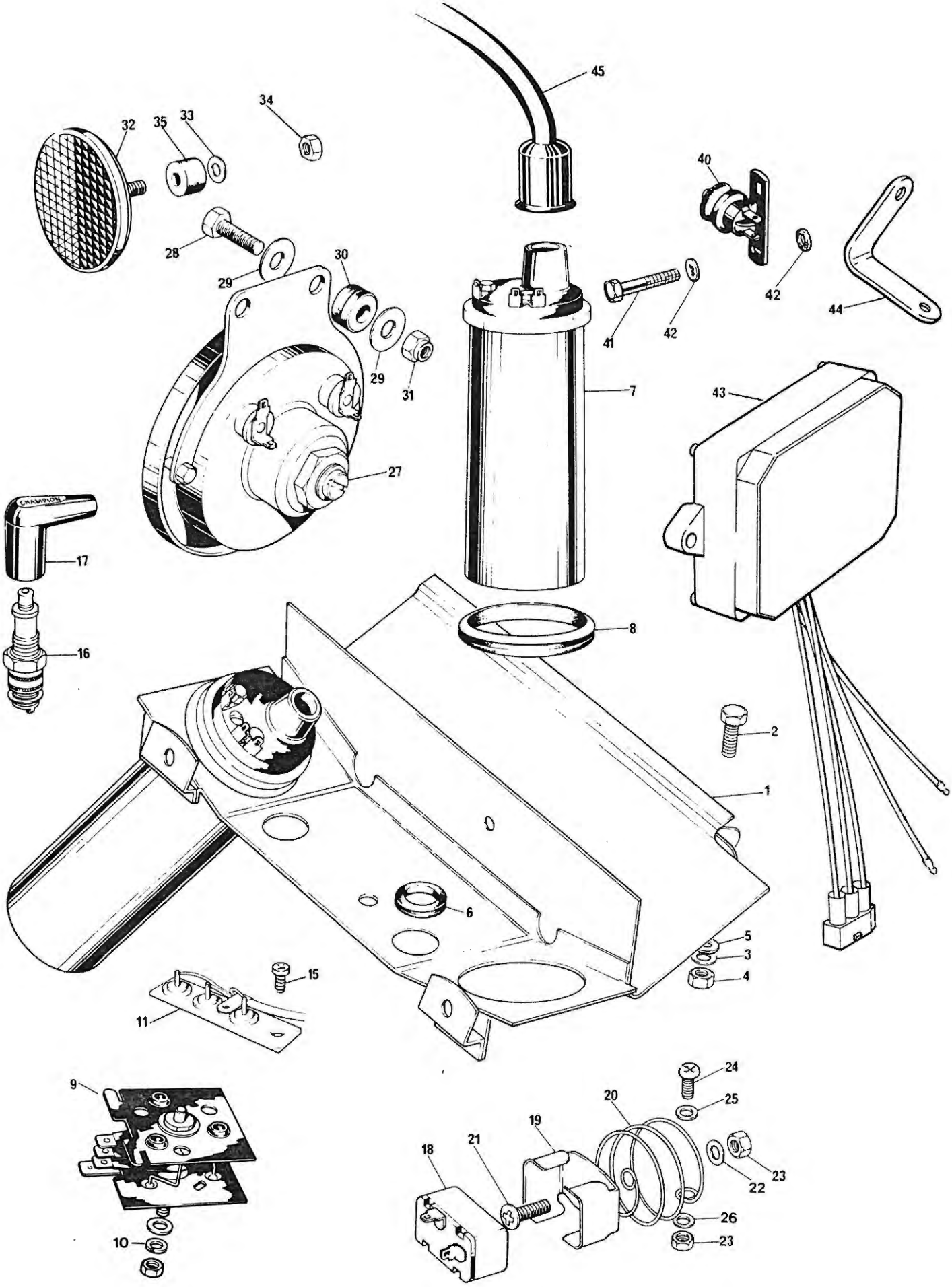

COIL,CAPACITOR PACK, FLASHER UNIT, ZENER DIODE AND HORN

ELECTRICAL COMPONENTS

Ref. No.	Part No.	Description	T140 E2S Qty	LE Req	EX
1	83-7502	Coil & tool tray	1	1	1
2	14-0103	Bolt, fixing tray to fender at rear	1	1	1
3	60-2329	Washer, for 14-0103	1	1	1
4	14-1301	Nut, for 14-0103	1	1	1
5	97-2209	Rubber washer, for 14-0103	1	1	1
NI	60-2347	Washer, for 14-0103	1	1	1
6	82-6784	Grommet, for harness at tray	2	2	2
7	45275	Coil	2	2	2
8	82-9561	Grommet, coil at tray	2	2	2
9	83539	Rectifier	1	1	1
10	70-3887	Washer, for 83539	1	1	1
11	60-7401	Diode pack-zener (3 bank)	1	1	1
15	21-7084	Screw, for 60-7401 at airbox	2	2	2
16	N5	Spark plug - Champion	2	2	2
17	60-0262	Cover, spark plug	2	2	2
18	35048	Flasher unit	1	1	1
19	54385091	Holder, for 35048	1	1	1
20	54386637	Spring, for 35048	1	1	1
21	21-2079	Screw, fixing-holder to spring	1	1	1
22	60-2391	Washer, for 21-2079	1	1	1
23	21-7009	Nut, for 21-2079	2	2	2
24	21-2079	Screw, fixing spring to tray	1	1	1
25	97-1388	Washer, for 21-2079	1	1	1
26	60-2416	Washer, for 21-2079	2	2	2
27	70276	Horn	1	1	1
28	14-0103	Bolt, fixing horn	2	2	2
29	60-2347	Washer, for 14-0103	2	2	2
30	60-3161	Grommet, horn fixing	2	2	2
31	14-1301	Nut, for 14-0103	2	2	2
32	57183	Reflector - "Amber"	2	2	2
33	60-2416	Washer, for 57183	2	2	2
34	82-3799	Nut, fixing for 57183	2	2	2
35	83-3522	Rubber spacer, for 57183	2	2	2
40	34815	Switch, rear stop light	1	1	1
41	21-7010	Screw, fixing for 34815	2	2	2
42	97-1388	Washer, for 21-7010	2	2	2
43	47270	Amplifier unit	1	1	1
44	83-7869	Bracket, fixing for 47270 at airbox L/H	2	2	2
NI	14-0102	Bolt, fixing for 47270 at bracket	2	2	2
NI	14-0103	Bolt, fixing bracket to airbox	2	2	
NI	60-2329	Washer, for 14-0102	2	2	2
NI	14-1301	Nut, for 14-0102 & 14-0103	4	4	4
45	60-3923	Cable, spark plug to coil	2	2	2

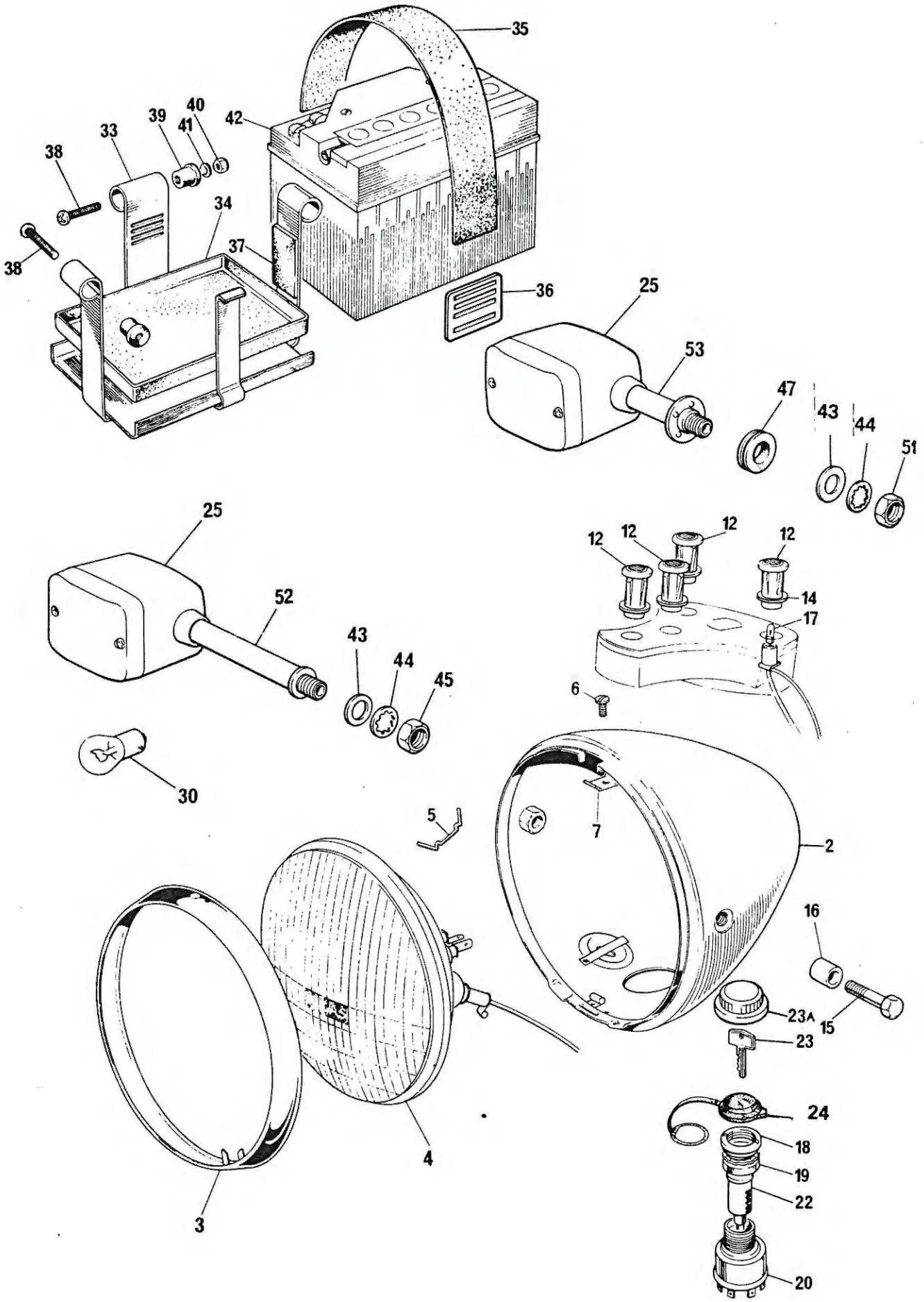
35
42
40
39
41
33
38
34
37
38
36
25
53
47
43
44
51
25
52
12
12
12
12
14
17
43
44
45
6
30
5
7
2
16
23A
15
23
24
18
19
22
4
3
20

HEADLAMP AND FLASHER LAMPS

Ref. No.	Part No.	Description	T140 E2S Qty	LE Req	EX
1		HEADLIGHT ASSEMBLY	1	1	1
2		Shell, headlight	1	1	1
3	553248	Rim, headlight	1	1	1
4		Light unit - sealed beam	1	1	1
5		Wire, fixing seal beam	6	6	6
6	144921	Screw, fixing rim to shell	1	1	1
7	534296	Plate, for 144921	1	1	1
12	54363454	Body, warning light - red - oil	1	1	1
12	54363455	Body, warning light - green - neutral	1	1	1
12	54363453	Body, warning light - amber - directional	1	1	1
12	54361250	Body, warning light - blue - high beam	1	1	1
14	54140331	Washer, for Ref. No. 12	3	3	3
15	54115106	Bolt - headlight mounting	2	2	2
16	97-7118	Spacer, for 54115106	2	2	2
17	281	Bulb, warning light	3	3	3
18	97-7120	Nut, ignition switch	1	1	1
19	97-4596	Spacer, ignition switch	1	1	1
20	39784	Switch, ignition	1	1	1
22	54335169	Ignition lock c/w 2 keys	1	1	1
23	FS	Ignition key - must state Key No.	AR	AR	AR
23A	97-7123	Cap, ignition key	1	1	1
24	60-7335	Splash cap, ignition key	1	1	1
25	60-7448	Directional light, front & rear	4	4	4
30	382	Bulb, directional light	4	4	4
33	83-7504	Carrier, battery	1	1	1
34	82-8091	Tray, battery carrier	2	2	2
35	82-9353	Strap, battery retaining	1	1	1
36	82-9355	Buckle, for 82-9353	1	1	1
37	83-7235	Protective strip, battery carrier	3	3	3
38	83-2508	Screw, fixing battery carrier	3	3	3
39	82-6039	Rubber bush, for 83-2508	3	3	3
40	21-7050	Nut, for 83-2508	3	3	3
41	60-2329	Washer, for 83-2508	1	1	1
42	60-7317	Battery, Yuasa YB14L	1	1	1
43	60-4350	Washer, for Ref. No.(s) 52 & 53	4	4	4
44	37-2331	Washer, for Ref. No.(s) 52 & 53	4	4	4
45	14-0404	Nut, fixing for Ref. No.(s) 52 & 53	4	4	4
47	82-5753	Grommet, for 83-8026	2	2	2
52	83-8023	Stem, directional light - front	2	2	2
53	83-8026	Stem, directional light - rear	2	2	
53	83-8068	Stem, directional light - rear			2
NI		Lens, directional light	4	4	4
NI		Screw, fixing directional light lens	8	8	8
NI	60-7501	Lead, directional light	4	4	4
NI	60-7502	Lead, directional light "ground" front	2	2	2
NI	60-7498	Lead, directional light "ground" rear	2	2	2
NI	60-7199	Lead, amplifier "ground"	1	1	1
NI	60-7465	Main wiring harness	1	1	1
NI	60-7198	Sub harness - rear	1	1	1

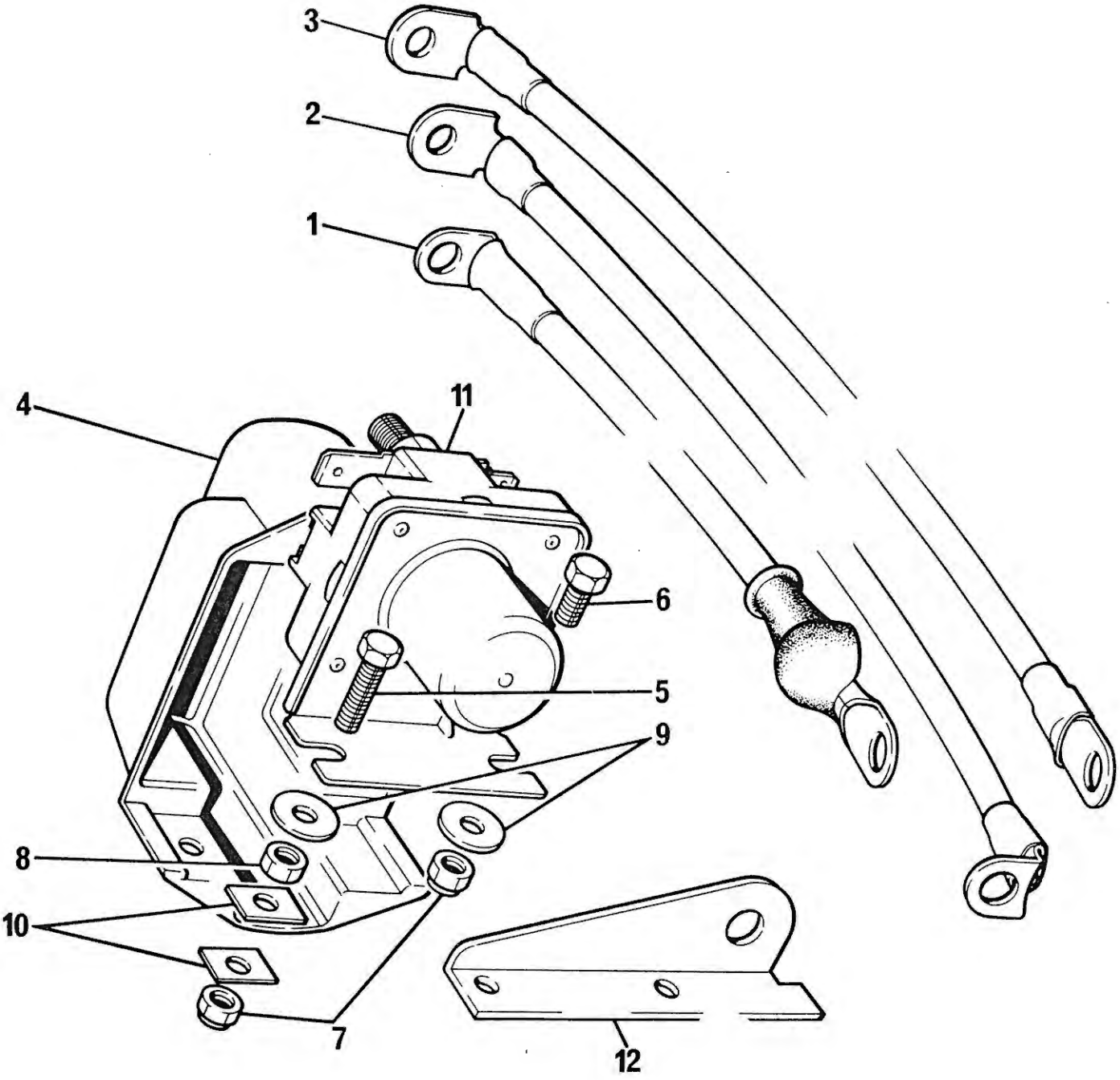
3
2
1
4
11
6
5
9
8
10
7
12

SOLENOID

Ref. No.	Part No.	Description	T140 E2S Qty Req	T140 LE Qty Req	T140 EX Qty Req
1	60-7320	Lead, starter to solenoid	1	1	1
2	60-7321	Lead, battery to solenoid	1	1	1
3	60-7322	Lead, battery to ground	1	1	1
4	83-7644	Cover, solenoid switch	1	1	1
5	23-1015	Bolt, fixing solenoid - upper	1	1	1
6	23-1012	Bolt, fixing solenoid - lower	1	1	1
7	23-2161	Nut, fixing solenoid cover	2	2	2
8	23-2001	Nut, fixing solenoid	1	1	1
9	97-1388	Washer, for Ref. No.(s) 5 & 6	2	2	2
10	21-7105	Washer, solenoid cover	2	2	2
11	60-7318	Solenoid starter switch	1	1	1
12	83-7737	Bracket, solenoid fixing	1	1	1

T140EX "EXECUTIVE EQUIPMENT

Part No.	Description	Qty.

PANNIERS & TOP BOX

83-7766	Pannier Set & Top Box C/W Fittings Red	1
83-7767	Pannier Frame C/W Lock LH	1
83-7768	Pannier Frame C/W Lock RH	1
83-7769	Bridge Stay - Pannier Frame	1
83-7770	Side Rail	2
83-7771	Bottom Stay	2
83-7772	Top Box Support LH	1
83-7773	Top Box Support RH	1
83-7774	Frame Top Box C/W Lock	1
83-7775	Bracket - Indicator Mounting	2
23-1043	Bolt Pannier Assy Top	10
23-1040	Bolt Pannier Assy Bottom	4
23-1557	Washer For Bolt	4
23-1033	Bolt - Top Box To Frame	4
23-1556	Washer For Bolt	4
83-7776	Pannier Case Red LH	1
83-7777	Pannier Case Red RH	1
83-7778	Top Box Red	1
83-8068	Indicator Stem Assy	4
60-7361	Extension Lead Indicator Rear	2

FRONT FAIRING SMALL

60-7359	Fairing Red C/W Screen & Fittings	1
60-7360	Fairing Red C/W Screen	1
97-7127	Bracket Fairing Top Fixing LH	1
97-7139	Bracket Fairing Top Fixing RH	1
97-0236	Bolt - L/RH Bracket To Top Yoke	1
97-7128	Bracket - Fairing Bottom Fixing LH	1
97-7129	Bracket Fairing Bottom Fixing RH	1
21-1043	Bolt Fairing To Bottom Bracket	2
21-7098	Nut - Dome For Bolt	2
83-7775	Bracket - Indicator Mounting	2

British Only

MOTORCYCLES AND PARTS INC.
32451 PARK LANE
GARDEN CITY, MI 48135 USA

PHONE ORDER HOURS:
MONDAY THRU FRIDAY 10-6 EST

Fax or email 24 hours a day!

CALL FOR OUR FREE 272 PAGE CATALOG!
OVERSEAS CUSTOMERS PLEASE SEND $10.00 FOR AIR POST

1-800-BRT-ONLY
OR
1-800-278-6659

Visit our website!
www.britishonly.com

50,000+ PARTS LISTED ONLINE
9,000+ PARTS VIEWABLE ONLINE

RETAIL: 734-421-0303
WHOLESALE: 734-525-1980
FAX: 734-422-9253
EMAIL: info@britishonly.com
WEBSITE: www.britishonly.com

— HYDE
— AMAL
— LUCAS
— SMITHS
— ROWE
— HEPOLITE
— MORGO
— DUNLOP
— RENOLD
— MEGACYCLE
— JOE HUNT
— BOOKSTORE
— NORVIL
— MORGO
— BARNETT
— JP PISTONS
— ALPHA

SPECIALIZING IN

TRIUMPH
Norton
BSA

THE BIGGEST!

ENGINE REBUILDING PARTS
GASKETS-SEALS-BEARINGS
BUSHINGS-PISTONS-RINGS
CLUTCHES-TUNE UP PARTS
SPEED EQUIPMENT

THE BEST!

STOCK AND CUSTOM PARTS
SEATS-HANDLEBARS-CHAINS
TIRES-TUBES-EXHAUST PIPES
MUFFLERS-GAS TANKS-FENDERS
RESTORATION PARTS

THE ONLY!

PARTS SHIPPED WORLDWIDE!

MasterCard · American Express Cards · NOVUS · VISA

WORLDS LARGEST SELECTION OF FACTORY ORIGINAL NEW AND USED PARTS
45,000 SQ. FT. OF MOTORCYCLE PARTS & ACCESSORIES FROM 1911 TO 1984 FOR ALL BRITISH MAKES!
CASH FOR ALL BRITISH BIKES, PARTS AND LITERATURE

V.I.P. Buyers Club
SAVE 10% OR MORE ON 17,000+ PARTS

British Only ***E-Store***
Bookstore
New Products
Scratch & Dent
Blue Light Specials
50,000+ PARTS LISTED ONLINE
9,000+ PARTS VIEWABLE ONLINE

British Only

MOTORCYCLES AND PARTS INC.
32451 PARK LANE
GARDEN CITY, MI 48135 USA

PHONE ORDER HOURS:
MONDAY THRU FRIDAY 10-6 EST

Fax or email 24 hours a day!

CALL FOR OUR FREE 272 PAGE CATALOG!
OVERSEAS CUSTOMERS PLEASE SEND $10.00 FOR AIR POST

1-800-BRT-ONLY
OR
1-800-278-6659

Visit our website!
www.britishonly.com

50,000+ PARTS LISTED ONLINE
9,000+ PARTS VIEWABLE ONLINE

RETAIL:734-421-0303
WHOLESALE: 734-525-1980
FAX: 734-422-9253
EMAIL: info@britishonly.com
WEBSITE: www.britishonly.com

— HYDE
— AMAL
— LUCAS
— SMITHS
— ROWE
— HEPOLITE
— MORGO
— DUNLOP
— RENOLD
— MEGACYCLE
— JOE HUNT
— BOOKSTORE
— NORVIL
— MORGO
— BARNETT
— JP PISTONS
— ALPHA

SPECIALIZING IN

TRIUMPH
Norton
BSA

THE BIGGEST!

ENGINE REBUILDING PARTS
GASKETS-SEALS-BEARINGS
BUSHINGS-PISTONS-RINGS
CLUTCHES-TUNE UP PARTS
SPEED EQUIPMENT

THE BEST!

STOCK AND CUSTOM PARTS
SEATS-HANDLEBARS-CHAINS
TIRES-TUBES-EXHAUST PIPES
MUFFLERS-GAS TANKS-FENDERS
RESTORATION PARTS

THE ONLY!

PARTS SHIPPED WORLDWIDE!

MasterCard · American Express Cards · NOVUS · VISA

WORLDS LARGEST SELECTION OF FACTORY ORIGINAL NEW AND USED PARTS
45,000 SQ. FT. OF MOTORCYCLE PARTS & ACCESSORIES FROM 1911 TO 1984 FOR ALL BRITISH MAKES!
CASH FOR ALL BRITISH BIKES, PARTS AND LITERATURE

V.I.P. Buyers Club
SAVE 10% OR MORE ON 17,000+ PARTS

British Only **E-Store**
Bookstore
New Products
Scratch & Dent
Blue Light Specials

50,000+ PARTS LISTED ONLINE
9,000+ PARTS VIEWABLE ONLINE

Fold

NAME _____

ADDRESS _____

CITY _____

STATE _____ ZIP _____

USE
FIRST CLASS
LETTER
POSTAGE

British Only

MOTORCYCLES AND PARTS INC.

32451 PARK LANE
GARDEN CITY MI 48135 U.S.A.

Fold

British Only

MOTORCYCLES AND PARTS INC.

32451 PARK LANE
GARDEN CITY, MI 48135
ORDER DESK 1-800-278-6659
OTHER INQUIRIES 734-421-0303
FAX 734-422-9253
Web Address: http://www.britishonly.com
E-mail: info@britishonly.com

Year	
Make	
Model	

Quanity	Part #	Description	Each	Amount

Date_____ / _____ / _____ Customer #_____Salesperson _____

Credit Card Used_____Card#_____Expires_____

Name_____

Address_____

City / State / Zip_____

Phone_____ / _____Fax_____ / _____

Email_____

Signature_____

Subtotal	
Insurance	
Shipping	
Total	
Michigan Residents Add 6% Sales Tax	
Amount Enclosed	

042600

- Fold -

NAME ______________________________

ADDRESS ______________________________

CITY ______________________________

STATE ________________ ZIP __________

USE
FIRST CLASS
LETTER
POSTAGE

British Only

MOTORCYCLES AND PARTS INC.

32451 PARK LANE
GARDEN CITY MI 48135 U.S.A.

- Fold -

British Only

MOTORCYCLES AND PARTS INC.

32451 PARK LANE
GARDEN CITY, MI 48135
ORDER DESK 1-800-278-6659
OTHER INQUIRIES 734-421-0303
FAX 734-422-9253
Web Address: http://www.britishonly.com
E-mail: info@britishonly.com

Year	
Make	
Model	

Quanity	Part #	Description	Each	Amount

Date_____ / _____ / _____ Customer #_____Salesperson _____

Credit Card Used_____Card#_____Expires_____

Name_____

Address_____

City / State / Zip_____

Phone_____ / _____Fax_____ / _____

Email_____

Signature_____

Subtotal	
Insurance	
Shipping	
Total	
Michigan Residents Add 6% Sales Tax	
Amount Enclosed	

042600