20-10343C

1961

BSA

SPARES

B40 MODEL

COPY OF B.S.A. REPAIRS GUARANTEE.

1. Whilst the highest standard of workmanship and materials is aimed at, we cannot accept liability for any defects appearing more than three months after the machine, assembly or component has left our works after being repaired.

2. We will repair or replace at our option free of charge any defective work, materials or parts relating to the repairs carried out by us appearing within that time but shall not be under any further or other liability for any other loss or damage whether direct or consequential and our liability shall be limited to the cost of so making good. We do not undertake to bear the cost of fitting such repaired part or accessory.

3. We do not accept liability in respect of parts of proprietary manufacture, e.g., tyres, saddles, chains, speedometers, revolution counters and electrical equipment which may be used by us in effecting a repair. All other conditions and warranties statutory or otherwise express or implied are hereby excluded.

KOPIE DER "BSA" REPARATUR-GARANTIE

1. Wir bemühen uns die höchste Fertigungsqualität zu erreichen, und wir verwenden die erstklassigsten Werkstoffe. Jedoch können wir trotzdem keine Haftpflicht für Mängel überhehmen, dié später als drei Monate, nachdem eine Maschine, Untereinheit oder Teil nach Reparatur unser Werk verlassen hat, auftreten.

2. Gemäss unserer Wahl reparieren oder ersetzen wir kostenlos innerhalb der obengenannten Frist alle schadhaften Teile, die im Zusammenhang mit den von uns ausgeführten Reparaturen stehen. Desgleichen machen wir innerhalb der obenerwähnten Frist alle fehlerhafte Arbeit gut, die mit den von uns ausgeführten Reparaturen zusammenhängt. Ferner ersetzen wir auch innerhalb des obengenannten Zeitraumes alle mangelhaften Werkstoffe, die im Zusammenhang mit den von uns ausgeführten Reparaturen stehen. Jedoch übernehmen wir keinerlei weitere oder andere Verpflichtung für andere Verluste oder Schäden, die direkt mit den von uns ausgeführten Reparaturen zusammenhängen oder als Folge solcher Reparaturen entstehen. Desgleichen beschränken sich unsere Verpflichtungen auf die Kosten der Wiedergutmachung und schliessen die Kosten der Montage von reparierten Teilen oder im Zusammenhang mit der Reparatur gelieferten Zubehörteilen nicht ein.

3. Für Teile und Zubehörteile (z.B. Reifen, Sättel, Ketten, Geschwindigkeitmesser, Umdrehungszähler und elektrische Ausrüstung), die nicht von uns hergestellt werden, anderer Herkunft sind und bei von uns ausgeführten Reparaturen Verwendung finden, übernehmen wir keinerlei Haftpflicht. Alle anderen Bedingungen und gesetzlicheu Verpflichtungen, die hier nicht ausdrücklich erwähnt oder miteinbegriffen worden sind, sind von der vorliegenden Garantie ausgeschlossen.

COPIE DE LA GARANTIE B.S.A. RELATIVE A REPARATIONS.

1. Bien que le but que nous essayons d'atteindre soit de fournir des pièces de la plus haute qualité et d'assurer une exécution irréprochable nous ne pouvons accepter aucune responsabilité pour des défauts qui se manifestent plus de trois mois après la date où la machine, l'ensemble ou la pièce quitte nos usines après réparation.

2. Nous réparerons ou remplacerous gratuitement, à notre charge, tout travail défectueux et toute matière ou pièce défectuense ayant rapport au travail exécuté si les défauts se manifestent avant le terme de la période citee ci-dessus mais nous ne pouvons accepter aucune responsabilité supplémentaire à l'égard d'autres pertes ou d'avaries, soit directes soit indirectes et notre responsabilité sera limitée au prix de réparation ou de remplacement indiqué. Nons ne supportons pas les frais de montage de pièce ou de l'accessoire réparé.

3. Nous n'aceeptons pas de responsabilité à l'égard de pièces et d'accessoires fabriqués par d'autres fabricants, par example, pneus, selles, chaines, compte-kilomètres, compte-tours, appareils électriques etc., dout nous pouvons nous servir pour exécuter une réparation. Toutes autres conditions et garauties, réglementaires ou autres, expresses ou tacities sont par ces présentes exclues.

COPIA DE LA GARANTIA B.S.A. RELATIVA A REPARACIONES

1. Mientras que aspiremos suministrar piezas de la más alta calidad y asegurar una ejecución perfecta de todo trabajo de reparación no podemos aceptar responsabilidad alguna con respecto a imperfecciones que puedan mostrarse después de un término de tres meses desde la fecha en que la máquina, el conjunto o la pieza sale de nuestra fábrica después de la reparación

2. Según nuestra opción repararemos o reemplaceremos a nuestra carga todo defecto de trabajo, de materia o de piezas tocante a la reparación ejecutada por nosotros que se muestra dentro del término citado arriba pero no aceptamos respousabilidad alguna para otro siniestro o otra avería sea directo o indirecto y nuestra reponsabilidad se restringirá al valor de restitución. No nos encargamos del costo de montar piezas o accesorios reparados.

3. No aceptamos responsibilidad alguna para piezas o accesorios de otros fabricantes, es decir neumáticos, sillinies, cadenas, velocimétros, contagiros y equipos eléctricos que podrían emplearse para una reparación. Todas otras condiciones y garantías estatutarias o no, explícitas o denotadas son excluidas por este acto.

B.S.A. SERVICE

(UNITED KINGDOM ONLY. ROYAUME UNI SEULEMENT, NUR VEREINIGTES KÖNIGREICH, REINO UNIDO SOLO)

When you purchase a B.S.A. machine you become the owner of a product which is backed by the most comprehensive motor cycle service in the world. The following notes are intended to give a guide to the facilities to the B.S.A. owner. Detailed information on any aspect of B.S.A. service may be obtained by discussion with your B.S.A. dealer or on application to the factory Service Department.

REPLACEMENT PARTS

The moderate price at which B.S.A. replacement parts are available, has been maintained by making full use of trade distribution channels, with the consequent advantages of large consignments delivered from the works with lower handling, packing and transport costs. For this reason, we do not normally supply spares direct to individual owners, and all requests for replacement parts should be made to your local dealer or spare parts stockist. All B.S.A. dealers carry stocks of B.S.A. replacement parts, but the officially appointed spare parts stockists, whose names and addresses are quoted in the following pages, maintain an extensive and comprehensive range. B.S.A. owners are strongly advised to fit genuine B.S.A. replacement parts only. Risks are incurred in not always insisting on the genuine component, and these risks are eliminated if parts are purchased only from our recognised dealers.

B.S.A. EXCHANGE REPLACEMENT SERVICE

The B.S.A. Exchange Replacement Service is of great value to all B.S.A. owners. It is particularly useful to those who rely on their machines for daily transport, and who cannot afford to have them off the road for more than a few hours at a time. Under this scheme the owner can exchange any worn or otherwise unserviceable unit, such as engine, gearbox, forks or wheels, for a fully-guaranteed factory-assembled replacement unit. These units are ready for immediate use, and are supplied at fixed prices on the understanding that the old units which they replace are not damaged to a degree where they are not capable of being reconditioned.

All genuine B.S.A. Exchange Replacement units carry the full three months warranty. Most B.S.A. dealers and officially appointed spare parts stockists are able to supply genuine exchange units from stock. If this cannot be done, they can obtain the unit for you quickly from the works, and make arrangements for it to be fitted to your machine, afterwards returning the old unit to us. In this way the machine need only be off the road long enough for the conversion to be made. Full details of this scheme can be obtained from your B.S.A. dealer, and an explanatory leaflet and price list will be sent upon request to B.S.A. Service Department.

CORRESPONDENCE

We maintain a skilled staff to help you with any query, technical or otherwise which you may have concerning your B.S.A. machine. We are always anxious to help, and all correspondence should be addressed to us at:—

B.S.A. MOTOR CYCLES LIMITED, Service Department, Armoury Road, Birmingham 11.

REPAIRS

(1). All motor cycles, engines or components for repair should be consigned to the factory Service Department at the following address:—

B.S.A. MOTOR CYCLES LIMITED, Service Department Armoury Road, Birmingham 11.

Full instructions must accompany all items sent to us for repair. If we are simply asked to overhaul a machine, all component parts will be completely dismantled and inspected, all worn parts will be renewed and the machine reassembled and tested to original inspection standards.

(2). When sending complete motor cycles, accessories such as windscreens, panniers, Club badges, tools and inflators, should be removed as they are liable to be damaged or lost in transit.

(3). It frequently happens that parts are forwarded to us which do not bear the senders name and address. Care in this respect will prevent delay and annoyance.

(4). All goods consigned to us must be sent carriage paid.

(5). Immediately we receive a part for repair, an acknowledgment and confirmation of your instructions is posted to you. If you have occasion to enquire by letter or telephone about the progress of the repairs, please follow the instructions printed on your form of acknowledgment.

SERVICE LITERATURE

An Instruction Book is supplied free of charge with each machine and contains all the information required for routine maintenance, and top overhaul. For the normal owner this book will cover all the work that he is likely to undertake. Further copies of Instruction Books to cover all post-war and most pre-war models are available from the Service Department.

For the guidance of dealers and other skilled mechanics, the Service Department also issues Service Manuals to cover each model. These manuals contain detailed instructions for complete dismantling and overhaul, and describe the special tools and jigs which are necessary for this purpose. The B.S.A. owner who has considerable mechanical experience, and feels that he is competent to carry out this more skilled type of work may obtain a copy of the Service Manual for his machine from the Service Department.

Additional Instruction Books are priced 3/- plus 3d. postage, and the Service Manuals are 7/- plus 6d. postage for each model. Full details of the machine should always be quoted.

HOURS OF BUSINESS

Our Service Department is open from 8.30 a.m. to 5.30 p.m. Monday to Friday, excepting holiday periods and we are pleased to see B.S.A. owners, and if necessary, to inspect and advise on the condition of their machines.

We cannot guarantee, however, to be able to service any machine if a call is made without an appointment, and even when calling by appointment, an owner should be prepared to leave his machine with us, in case the work cannot be completed on the same day.

A commissionaire is always on duty to receive machines brought to the Service Department by appointment, at any time of the day or night, on any day of the week, and similar arrangements are made for collection. Any machine delivered to us after hours should, however, be accompanied by full instructions in writing, together with the owner's name and address.

British Only

MOTORCYLES AND PARTS INC.

32451 PARKLANE ST.
GARDEN CITY, MI 48135 USA

WWW.BRITISHONLY.COM
INFO@BRITISHONLY.COM

RETAIL: 1-800-278-6659 ***WHOLESALE: 1-800-852-9253*** ***FAX: 1-734-422-9253***

WORLDS LARGEST SELECTION OF FACTORY ORIGINAL NEW AND USED PARTS

45,000 SQ. FT. OF MOTORCYLE PARTS & ACCESSORIES FROM 1911 TO 1984 FOR ALL BRITISH MAKES!
CASH FOR ALL BRITISH BIKES, PARTS AND LITERATURE

SPECIALIZING IN
VINTAGE MOTORCYLCE PARTS

TRIUMPH
Norton
BSA

THE BIGGEST!

ENGINE REBUILDING PARTS
GASKET - SEALS - BEARINGS
BUSHINGS - PISTONS - RINGS
CLUTCHES - TUNE UP PARTS
SPEED EQUIPMENT

THE BEST!

STOCK AND CUSTOM PARTS
SEATS - HANDLEBARS - CHAINS
TIRES - TUBES - EXHAUST PIPES
MUFFLERS - GAS TANKS - FENDERS
RESTORATION PARTS

THE ONLY!

Central Wheel Components · Barnett Clutches & Cables · Classic Transfers Robert Derrick Ltd · Renold · Lucas · Amal · Emgo Your Powersport Supplier · Brituro England · JP Pistons · Hastings · UH

VELOCETTE • ANDOVER NORTON • TEC • HAYNES • P&P SEATING • WASSELL • MORGO
ALPHA BEARINGS • M.A.C. PRODUCTS • JOE HUNT MAGNETOS • J.J. CABLES • BUCHANAN'S
L.A. SLEEVE • MEGACYCLE CAMS • T.J. WASSELL LIMITED • SUDCO INTERNATIONAL
ACE CLASSICS LONDON • CLASSIC GASKETS • BRITISH WIRING • PBM ENGINEERING
TRI-COR ENGLAND • LEAK PROOF SEALS • MCA (ASTON) LIMITED • GARDNER - WESTCOTT

WE ACCEPT VISA - MASTERCARD - DISCOVER - AMERICAN EXPRESS

PARTS SHIPPED WORDLWIDE !!! VISA · MasterCard · Discover · American Express

VISIT OUR EBAY STORE
http://stores.ebay.com/British-Only-Motorcycles-And-Parts

British Only

MOTORCYLES AND PARTS INC.

32451 PARKLANE ST.
GARDEN CITY, MI 48135 USA

WWW.BRITISHONLY.COM
INFO@BRITISHONLY.COM

RETAIL: 1-800-278-6659 ***WHOLESALE: 1-800-852-9253*** ***FAX: 1-734-422-9253***

WORLDS LARGEST SELECTION OF FACTORY ORIGINAL NEW AND USED PARTS

45,000 SQ. FT. OF MOTORCYLE PARTS & ACCESSORIES FROM 1911 TO 1984 FOR ALL BRITISH MAKES!
CASH FOR ALL BRITISH BIKES, PARTS AND LITERATURE

SPECIALIZING IN
VINTAGE MOTORCYLCE PARTS

TRIUMPH
Norton
BSA

THE BIGGEST!

ENGINE REBUILDING PARTS
GASKET - SEALS - BEARINGS
BUSHINGS - PISTONS - RINGS
CLUTCHES - TUNE UP PARTS
SPEED EQUIPMENT

THE BEST!

STOCK AND CUSTOM PARTS
SEATS - HANDLEBARS - CHAINS
TIRES - TUBES - EXHAUST PIPES
MUFFLERS - GAS TANKS - FENDERS
RESTORATION PARTS

THE ONLY!

Central Wheel Components · Barnett Clutches & Cables · Classic Transfers Robert Derrick Ltd · Renold · Lucas · Amal · Emgo Your Powersport Supplier · Brituro England · JP Pistons · Hastings · UH

VELOCETTE • ANDOVER NORTON • TEC • HAYNES • P&P SEATING • WASSELL • MORGO
ALPHA BEARINGS • M.A.C. PRODUCTS • JOE HUNT MAGNETOS • J.J. CABLES • BUCHANAN'S
L.A. SLEEVE • MEGACYCLE CAMS • T.J. WASSELL LIMITED • SUDCO INTERNATIONAL
ACE CLASSICS LONDON • CLASSIC GASKETS • BRITISH WIRING • PBM ENGINEERING
TRI-COR ENGLAND • LEAK PROOF SEALS • MCA (ASTON) LIMITED • GARDNER - WESTCOTT

WE ACCEPT VISA - MASTERCARD - DISCOVER - AMERICAN EXPRESS

PARTS SHIPPED WORDLWIDE !!! VISA · MasterCard · Discover · American Express

VISIT OUR EBAY STORE
http://stores.ebay.com/British-Only-Motorcycles-And-Parts

CATALOGUE OF

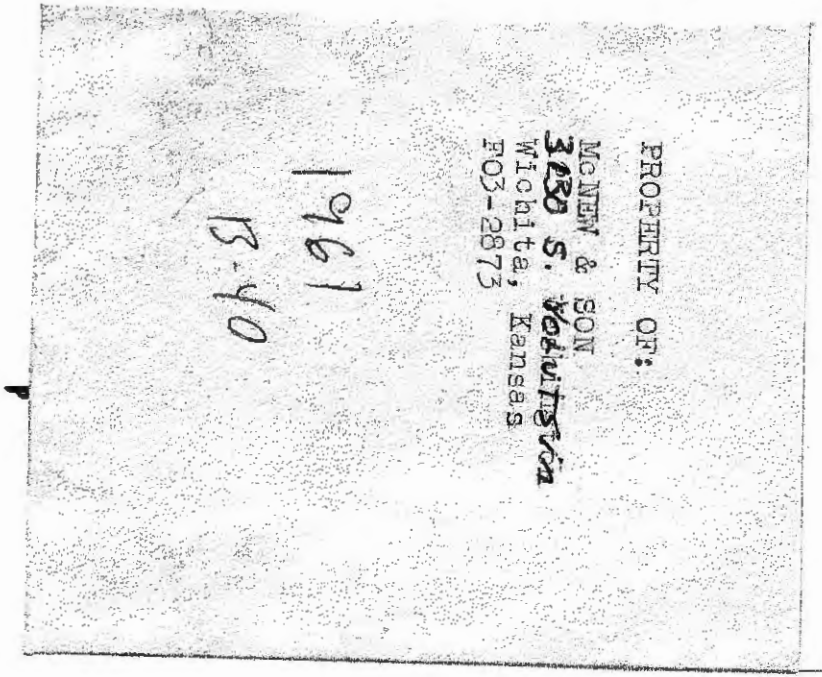

TELEPHONE . . . BIRMINGHAM VICTORIA **3711**
TELEGRAMS . . . "SELSERV" BIRMINGHAM

B.S.A. MOTOR CYCLES LTD.

Registered Offices and Works: ARMOURY ROAD, BIRMINGHAM 11

Telephones: BIRMINGHAM VICTORIA **2381** *Telegrams and Cables:* "SELMOTO BIRMINGHAM"

Contractors to Her Majesty's Government, the War Office, the Admiralty, the Post Office, the Colonial and Foreign Governments.

MC1249-2¼

Printed in England Dec., 1960

SUFFIX NUMBERS TO BE USED TO IDENTIFY VARYING FINISHES.
CHIFFRES DE SUFFIXE A EMPLOYER POUR IDENTIFIER LES PRESENTATIONS VARIÉES.
NACHZAHLEN ZU BENUTZEN UM DIE VERSCHIEDENEN AUSFUHRÜNGEN ZU BEZEICHNEN.
CIFRAS ADICIONALES QUE SE EMPLEA PARA IDENTIFICAR LOS ACABADOS VARIOS.

MUDGUARDS /027	**TOOLBOX /027**	**OIL TANK /027**	ROYAL RED
GARDEBOUE /027	**BOITE A OUTILS /027**	**RESEVOIR D'HUILE /027**	ROUGE ROYALE
SCHUTZBLECH /027	**WERCZEUGKASTEN /027**	**OLTANK /027**	KARMIN-ROT
GUARDABARROS /027	**CAJA DE HERRAMIENTOS /027**	**DEPOSITO DE ACEITE /027**	ROJO REAL

FRAME /007 BLACK	**PETROL TANK /109**	ROYAL RED AND CHROME
CADRE /007 NOIR	**RESEVOIR D'ESSENCE /109**	ROUGE ET ROYALE CHROME
RAHMEN /007 SCHWARZ	**BENZINTANK /109**	KARMIN-ROT MIT CHROMFELD-ERN
CUADRO /007 NEGRO	**DEPOSITO DE COMBUSTIBLE /109**	ROJO REAL Y CROMADO

When ordering components with varying finishes, please state finish required by adding the APPROPRIATE NUMBER TO PART NUMBER.

En commandant des pièces avec présentations différentes veuillez indiquer la présentation requise en ajoutant les chiffres appropriés au numéro de CATALOGUE DE LA PIECE.

Bei Bestellungen von Teilen mit verschiedenen Ausfuhrüngen bitte die Erwünschte Ausfuhrung mit Angabe der entsprechenden Nachzahl nach dem TEILNUMMER BEZEICHNEN.

Al pedir piezas con acabados differentes sírvase indicar el acabado requirdo mediante la cifra relativa escrita después del NUMERO DE CATALOGO DE LA PIEZA.

EXAMPLE. Oil Tank, 160 40-8302/027

EXEMPLE. Réservoir d'huile, 160 40-8302/027

BEISPIEL. Öltank, 160 40-8302/027

EJEMPLO. Deposito de aceite, 160 40-8302/027

LIST OF B.S.A. STOCKISTS

Save time and postage by contacting your nearest B.S.A. Stockist for B.S.A. Spare Parts, Spare Part Catalogues, Instruction Books, Transfers, etc.
All B.S.A. Dealers carry stocks of B.S.A. Spare Parts but the following appointed Stockists maintain a comprehensive range.

Town.	Name of Stockist	Address.	Telephone No.	Telegraphic Address.
Aberdeen	J. Dawson	24-26, Thistle Street	25556	
,,	George Cheyne (Cycles) Ltd.	147-149, Holburn Street	50341/2	Motorbike, Aberdeen.
Aberystwyth	Gwalia Motor Co.	North Parade	525	
Accrington	Bill Snape Ltd.	379, 392 and 396, Blackburn Road	4724	
Aldershot	Phillips Bros. (Aldershot) Ltd.	Birchett Road	1111-2	Phillips, Cycles, Aldershot
Alloa	J. G. Robertson (Cycle) Ltd.	55-57, High Street	193	
Andover	Corbett & Ellis (Andover) Ltd.	Weyhill Road	2991	
Ashington	Mains of Ashington	Laburnam Terrace	3204	
Aylesbury	Eborn's Garage	44, Walton Street, Aylesbury	3150	Eborn's Aylesbury.
Banbury	Trinder Bros.	2a, Broad Street	2546	
,,	Taylor Dow Ltd.	Southam Road, Oxon.		
Basingstoke	Fred Slade	May Place, London Road, Hants.		
Barnsley	T. Garner & Son	Sheffield Road	2866	
Barnstaple	Bob Ray Ltd.	43, High Street	4266	
Bath	R. U. Holoway and Son	32, 33 and 34, St. Johns Road	Bathwick 5084	
Bedford	The Imperial Cycle Co.	58, St. Loyes	2374	
Belfast	W. J. Chambers & Co.	106 and 108, Donegall Pass	27253-4	Fastmote, Belfast.
Biggleswade	Bryants	25, 27, 72 and 74, Shortmead Street	3108	
Birkenhead	Bob Simister Ltd.	540-544, New Chester Road, Rock Ferry	Rock Ferry 1452	
Birmingham	County Cycle & Motor Co. Ltd.	265-266, Broad Street	Midland 2671	
		104, Bath Row (Repairs) (closed Sat. 1 p.m.)	Midland 2817	
,,	C. E. Cope & Sons Ltd.	481-487, Hagley Road, Edgbaston 17	Bearwood 2246-7	
,,	Shovelbottom's Ltd.	376, Ladypool Road, Sparkbrook 12	South 2212-3247	
,,	Aston Auto Motors	177, Aston Road, 6	Aston Cross 3201-2	
Blackburn	S. & G. Motor Cycles (Blackburn) Ltd.	15-17, Great Bolton Street	6678	
Blackpool	J. Hall & Son (Blackpool) Ltd.	102-6, Devonshire Road	22130	
Blandford	Badger Garages Ltd.	Salisbury Road	615	
Bolton	Charlie Robinson (Motor Cycles) Ltd.	119 and 121, Higher Bridge Street	3931	
Boscombe	Craze Bros. Ltd.	473 and 475, Christchurch Road	Boscombe 33231/2	
Bradford	Sidneys Motor Cycles	107, Manningham Lane	29889	
,,	J. K. Hirst Ltd.	41, Wakefield Road	22543	
Bridgwater	Anderson & Wall Ltd.	18, St. Mary Street	2416	Anderson & Wall, Bridgwater.
Brighton	Redhill Motors (Brighton) Ltd.	104, North Road	25281	
Bristol	S. J. Fair Motors Ltd.	201-3, Cheltenham Road	4-6238/4-1015	
Bromsgrove	Ralphs	110, Birmingham Road	3228	
Bury St Edmunds	Barclay Motors Ltd.	Kings Road Corner	2345/9	
Cambridge	King & Harper Ltd.	Milton Road Corner	3201	Motors, Cambridge.
Canterbury	Hallets of Canterbury	St. Dunstan's Street	2275/6	
Cardiff	Car Distributors (Cardiff) Ltd.	134-140, City Road	30022	
,,	Robert Bevan & Son	29-35, Castle Street	27477/8	
Carlisle	W. T. Tiffen & Son	Irishgate, Carlisle	25024	Tiffin, Irishgate, Carlisle.
Carmarthen	Eddie Stephens Motors	22/23, Water Street	Carmarthen 6233	

Town.	Name of Stockist.	Address.	Telephone No.	Telegraphic Address.
Chatham	Grays of Chatham Ltd.	11-19, High Street	4005	
Chelmsford	Hadlers Garage Ltd.	New Street	4844-5	Hadler, Chelmsford.
Cheltenham	H.&L. Motors Ltd.	Bath Street	2887	
Chester	Davies Bros. (Chester) Ltd.	34, Bridge Street	25510	
Chesterfield	Walter Wragg Ltd.	95, Lordsmill Street, Derbyshire		
Chichester	W. Goodridge & Co. Ltd.	East Street	2033	
Clydebank	John A. Weddell	72, Dumbarton Road	Clydebank 1429	
Colchester	G.B.R. Motors Ltd.	1-2, East Hill	6131/2	
Colne	C. H. Schoffield (Motors) Ltd.	Market Place	859	
Coventry	Coventry Motor Mart Ltd.	86, London Road	2146-7	Coventry Motor Mart.
Crawley	Lewis Thirkell Ltd.	60-62, The Boulevard, Crawley.	25507	
Crewe	Cooke's Garages	10-20, Nantwich Road	2011	Cooke's Motors, Crewe.
Croydon	Godfreys Ltd.	228-234, London Road	Croydon 3641-2	Gofrabike, Croydon.
Dagenham	Reginald Smith (Motor Cycles) Ltd.	Imperial House, New Road	Rainham 3284-2786	
Dalton-in-Furness	H. Holme	24-26, Ulverston Road	25	
Darlington	The Duplex Motor & Cycle Co. Ltd.	10-16, Grange Road	Darlington 2071	Duplex, Darlington.
,,	White Bros. (Darlington) Ltd.	201/205-9, Northgate	67757	
Dartford	Schweizo Bros. Ltd.	177, Lowfield Street	Dartford 4279	
Derby	Ingles Provincial Garages Ltd.	Walbrook Road	45289	
Doncaster	W. Cusworth (Doncaster) Ltd.	7, Hall Gate	4594	
Douglas (I.O.M.)	Gilbert Harding Ltd.	18, Duke Street and 5, Market Street	Douglas 170	
Dudley	Chas. E. Cope & Sons Ltd.	98 and 193, High Street	Dudley 53464	
Dundee	George McLean Ltd.	Ward Road	5087	Vehicles, Dundee.
Dunstable	B. G. England (Dunstable) Ltd.	Half Moon Hill, London Road	843-4	
Eastbourne	Jempsons Ltd.	118-120, Seaside	756	Jempsons, Eastbourne.
Edinburgh	J. R. Alexander & Co. Ltd.	10-14, Lothian Road	4455	Motorcycles, Edinburgh.
Elgin	Farquharsons	55-57, High Street	7188	Elgin 7188.
Enfield	D. J. Shepherd & Co. (Enfield) Ltd.	434,-6 Hertford Road, Enfield Highway	Howard 1631	
Exeter	P. Pike & Co. Ltd.	Alphington Street	58241	Piko, Exeter
Frome	J. Difazio Motor Cycles	25, Catherine Street	2913	
Gateshead, 8	O. Carmichael & Son Ltd.	75, High West Street	71815	
Glasgow, C3	Bell Bos. (H.P.) Ltd.	223, St. Georges Road	Douglas 6414	Douglas 6414, Glasgow.
,, **C4**	J. R. Alexander & Co. Ltd.	272, Great Western Street	Douglas 7516	Alex Moto, Glasgow.
Gloucester	Harpers of Gloucester	23a, Worcester Street	23187	Gloucester 23187.
Grimsby	H. J. Gresswell and Son Ltd.	13, 15 and 19, Osborne Street	2202	
Guernsey	Millard & Co. Ltd.	Victoria Road	777	
Guildford	E. Pascall (Guildford) Ltd.	11-12, Woodbridge Road	Guildford 2274-5-6	Millard Motors, Guernsey.
Harrogate	H. Aclam (Prop. H. Baynes)	11, BowerRoad	5125	
Harrow	Pinks of Harrow	Station Road	0044-5, (Spares 3328)	Pink, Harrow.
Hatfield	W. Waters & Sons Ltd.	32, Great North Road	2255	
Hereford	A. Kear & Co.	52b, Commercial Street	2239	Kear, Hereford.
Holbeach	Gordan Woodman Ltd.	34, Fleet Street	3221	
Hornchurch	T. W. Kirby Ltd.	10, Roneo Corner	8785	
Hounslow	Stanley's Motors	46-8, Lampton Road	Hounslow 1949	Stanley's, Hounslow.
Huddersfield	Earnshaw	Manchester Road	1232	
Hull	Browns (Witham) Ltd.	47-49, Witham	Witham 29802	

Town.	Name of Stockist	Address.	Telephone No.	Telegraphic Address.
Hull	Jordans of Hull	Storey Street	24131	Gumption, Hull.
Ilford	J. J. Double (Motor Cycles) Ltd.	1, Mildmay Parade, Cranbrook Road	Valentine 0191, 0192, 7723	
Ilkeston	Ray Gamble	Pelham Street (off Bath Street)	873	
Ipswich	Revetts Ltd.	Clarkson Street	53726/7	
Jersey	Colebrooks (J. D. Poingdestre)	22½, New St. Johns Road, St. Helier	Central 642	Colebrooks, Jersey.
Keighley	Dick Ratcliffe	Coldshaw Garage, Haworth	Haworth 3133	
Kendal	Tom O'Loughlin Ltd.	66, Stricklandgate	315	
Kings Lynn	Peter Guest Ltd.	Wooton Road	4129	
Kirkcaldy	County Motors (Kirkcaldy) Ltd.	Junction Road	Dysart 5631	
Lancaster	Pye Motors Ltd.	Parliament Street	3553	
Launceston	J. Wooldridge & Sou	Western Road	21	Wooldridge, Launceston.
Leeds, 1	Watson-Cairns & Co. Ltd.	157-8, Lower Briggate	33024/5	Watson-Cairns, Briggate, Leeds
Leicester	E. W. Campion & Son Ltd.	Welford Place	58054	
Lincoln	Wests (Lincoln) Ltd.	116, High Street	21262	
Liverpool, 3	Cundles (Liverpool) Ltd.	41, Byrom Srreet	Central 4148	Cundles, Central 4148.
Llawhaden	James Bowen & Sons (Llawhaden)	Llawhaden, near Narberth, Pem.	Llawhaden 6	
London, E.6	Godfreys Ltd.	220, Barking Road, East Ham	Grangewood 8088	Gofrabike, Forgate.
E.7	Godfreys Ltd.	418, Romford Road, Forest Gate	Grangewood 1234-5	Gofrabike, Forgate.
E.8	Eleanor Motors	265-7-9, Mare Street, Hackney	Amherst 5134-3923	
E.18	E. S. Longstaff Ltd.	88, High Road, Woodford	Buckhurst 6369-6757	
N.5	Glanfield Lawrence (Highbury) Ltd.	25, Highbury Corner	North 2791	
N.12	George Grose	834, High Road, Finchley	Hillside 2149	
N.12	Glanfield Lawrence Ltd.	407, High Road, Finchley	Finchley 0091	Glanfin, Norphone, London.
N.15	Godfreys Ltd.	94, 96 and 104, High Road, Tottenham	STA 9960	Gofrabike, London.
N.W.1	J. Grose Ltd.	379-381, Euston Road	Euston 5231	
N.W.10	Slocombes Ltd.	239, Neasden Lane, Neasden	Gladstone 3355	
S.E.11	Writers Ltd.	161-5, Kennington Lane	Reliance 1362	
S.E.13	F. Parks & Sons Ltd.	404, High Street, Lewisham	Lee Green 0535	
S.E.15	West End Motors Ltd.	171, High Street, Peckham	Newcross 2589	
S.E.18	Cleare & Co. Ltd.	1, High Street, Woolwich	Woolwich 0174	
S.W.6	Claude Rye Ltd.	897-921, Fulham Road, Fulham	Renown 6174	Ryebikes, Walgreen, London
S.W.9	Pride & Clarke Ltd.	158, Stockwell Road	Brixton 6251	Priclarke, London.
S.W.11	Owen Bros.	19, Battersea Rise, Clapham Junction	Battersea 7816	
S.W.17	Elite Motors (Tooting) Ltd.	951-961, Garrat Lane, Tooting Broadway	Balham 1200	Elitemota, Toot, London.
W.1	Godfreys Ltd.	208-210, Great Portland Street	Euston 4632-4	Gofrabike, London.
W.3	Whitbys of Acton Ltd.	273, The Vale, Acton	Shepherd's Bush 5355-6	
W.5	Kays of Ealing Ltd.	8-10, Bond Street	Ealing 2387	Sparesokay, Ealux, London.
W.12	Turners Stores	81-83, Goldhawk Road, Shepherd's Bush	Shepherd's Bush 2436	
Lowestoft	R. Wright	67-69, London Road South	645	
Macclesfield	A. Watling	49, Buxton Road	3592	
Maidstone	Redhill Motors (Maidstone) Ltd.	The Broadway, Maidstone	3096	
Manchester, 3	Tom Davies (Motors) Ltd.	233, Deansgate	Blackfriars 0681	
,, **22**	Alex Parker	31/33, Palatine Road, Northenden	Wythenshaw 2062	
,,	Fred Fearnley Ltd.	692-4, Ashton Old Road	East 1445-6	Fernbike, Manchester.
Mansfield	Henstocks	128, Chesterfield Road	329	Henstock 329, Mansfield.

Town.	Name of Stockist.	Address.	Telephone No.	Telegraphic Address.
Middlesbrough ...	J. T. Dickinson (Middlesbrough) Ltd.	160-162, Lindthropre Road	3861	Payacob, Middlesbrough.
Neath	Fred Rist	16 and 17, Windsor Road	Neath 780	
Newcastle-on-Tyne	Dene (Newcastle) Motor Co. Ltd.	Haymarket	2-9165/6	Ened, Newcastle-on-Tyne.
Newton Abbot ...	J. E. Green & Co.	87, Queen Street	653	
Newport, (Mon.) ...	R. J. Ware & Sons	69, Commercial Street	66206	
Northampton ...	Glanfield Lawrence (Northampton) Ltd.	40-44, Wellingborough Road		
Norwich	Chapmans (Norwich) Ltd. ...	38-42, Duke Street	24727	
Nottingham	E. W. Campion & Son Ltd. ...	Arkwright Street and Queens Road	83444	
Oldbury	Bromford Garage	Bromford Road, Worcs.	BRO 2225	
Oldham	Alan Taylor	192, Manchester Street	Main 4456	
Oswestry	Roy Evans (Motor Cycles) ...	Willow Street	1144-7	
Oxford	Temples	69, St. Thomas Street	47496/7	
,, ...	Faulkner & Son	12, Cardigan Street	57279	
,, ...	John Avery	228/230 and 240, Banbury Road	57362/3	
Parkstone	Bob Foster	472-6, Ashley Road	3500/1	
Perth	M. Shaw & Sons	143, High Street	483	
Peterborough ...	Burrows Bos.	55-57, Westgate	2154	
Plymouth	P. Pike & Co. Ltd.	Millbay Road	Plymouth 63018	Piko, Plymouth.
Pontardulais	T. Griffiths	Forest Garage	Pontardulais 323	
Portsmouth	Jenkins & Purser Ltd.	277-281, Copnor Road	2339	
,, ...	Glanfield Lawrence	147-157, Fratton Road	74331	
,, ...	Percy Kiln Ltd.	65-67, Elm Grove	23734	
Preston	Loxhams Garages Ltd.	Central Garage, Charnley Street	Sales Dept. 4242 Service Dept. 4243	Loxhams, Preston.
Pulborough	Gray & Rowsell (Bury) Ltd. ...	Bury Gate, Pulborough	Bury 4	
Radcliffe	Will Lord (Motor Cycles) Ltd. ...	115, Blackburn Street	2002	
Reading	Phillips & Bloomfield Motors Ltd.	10-14, South Street	2635	
Reading	Stocker & Shepherd Ltd. ...	129/133, Oxford Road	53983-52212	
Redhill	The Redhill Motor & Cycle Works Ltd.	50-54, Brighton Road	327	
Ripon (Yorks) ...	T. Ellis	2, High Skellgate	Ripon 1079	
Rotherham	Ernest Cross	55-59, Drummond Street	Rotherham 3987	
Salisbury	Pankhurst (Weymouth) Ltd. ...	78-79, Exeter Street	Salisbury 5222-3	
Scarborough	E. Andrew of Scarborough Ltd. ...	149, Victoria Road	Scarborough 1857	
Sevenoaks	Angus Motor Cycles	Station Parade	3338	
Sheffield, 1	Walter Wragg Ltd.	Stanley Works, Wellington Street	26098	26098 Sheffield.
Shrewsbury	J. R. Meredith	Coleham Head	6529	
Sittingbourne ...	Scoones Garage	9, West Street	66	Scoones, Sittingbourne.
Slough	Sid Moram	Wexham Corner, High Street	Slough 23767	
Southampton ...	Alec Bennett Ltd.	152, Portswood Road	54081-2-3	
Southport	H. F. Brockbank	62, King Street	5054	
St. Albans	Clarkes Ltd.	164, London Road	53153	
St. Helens	Geoff. Duke Ltd.	Greenfield Road Garage	3918	
Stockport	Theobald & Coppack	6, Chestergate	2843	Theobald Coppack, Stockport.
Stockton-on-Tees ...	T. Cowie Ltd.	Norton Road	65361	
Stoke-on-Trent ...	J. & N. Bassett	Howards Place, Shelton	2890	

Town.	Name of Stockist	Address.	Telephone No.	Telegraphic Address.
Stourbridge	Pearsons Cycle Depot ...	31, Market Street	5677	
Sunderland	Dunns Garage (Sunderland) Ltd.	Wheatsheaf Corner, North Bridge Street ...	57666/7	
Swansea	Glanfield Lawrence (Swansea) Ltd.	13/14, Fisher Street	50311	
Taunton	W. P. Edwards (Motors) Ltd. ...	Station Road	2943	Edwards, Motor Cycles, Taunton.
Thames Ditton ...	Comerfords Ltd.	Portsmouth Road, Thames Ditton	Emberbrook 5531	
Torquay	P. H. Sharam Ltd.	244-6, Union Street	4184 and 7255	
Troon	Cooper Bros.	117-129, Templehill	925	
Truro	W. H. Collins & Son	Kenwyn Mews	Truro 2168	
Tunbridge Wells ...	G. E. Tunbridge	21, London Road	416	Motors, Tunbridge Wells.
Twickenham ...	Blays of Twickenham Ltd. ...	192-9, Heath Road	Popesgrove 2103 & 1435	
Uxbridge	Miles Motors	60, High Street	Uxbridge 6000	
Wakefield	Parkinsons (Wakefield) Ltd. ...	38, Ings Road	2087	
Walsall	The Motor Cycle Mart (Walsall) Ltd.	12, Ablewell Street	3363	
Warrington	Jack Frodsham Ltd.	37a, Winnick Street	34713	
Watford	Lloyd Cooper & Co. Ltd. ...	61, Queen's Road	2125	Lloyd Cooper, Watford.
Wellington (Salop) ...	Bill Doran & Matt Wright ...	Park Street Garage	Wellington 138	
Westcliff-on-Sea ...	J. Costin & Sons	237, London Road	Southend 42215	
Weston-super-Mare	Wyverns of Weston Ltd. ...	3, Locking Road	524	Wyverns, Weston-super-Mare.
Weybridge	W. L. Lewis & Sons	51, Church Street	2210	
Weymouth	Tilleys (Dorset) Ltd.	9, Frederick Place, St. Thomas Street ...	72	
Whitehaven	Mark Taylor	21, King's Street	252	
Wolverhampton ...	C. E. Cope & Sons Ltd.	169, Stafford Street	24605-6	
Worcester	W. J. Bladder & Son	52, Sidbury	2438	Bladder, Sidbury, Worcester
Worksop	Ezra Sugden Ltd.	109, Gateford Road	3053	
Yeovil	The Yeovil Motor Mart	Hendford	267	Motor Mart, Yeovil.
York	C. S. Russell (York) Ltd. ...	Lawrence Street	23793	Russell, Lawrence St., York.

B.S.A. OVERSEAS DISTRIBUTORS
CONCESSIONAIRES D'OUTREMER
VERTRETER IM AUSLAND
DISTRIBUIDORES ULTRAMARINOS

ADEN	Arabian Trading Co., Maala Garage, Aden.
ALASKA	Hap Alzina, 3074, Broadway, Oakland 11, California, U.S.A.
ALGERIA	Movea, 79, Ave. de la Grande Armee, Paris XVI, France, operating through: Societe Algerienne de Distribution d' Equipements Britanniques, 1, rue d' Assus Alger, Algiers.
ARGENTINA	Ditlevsen & Cia Ltda, Av. Ingeniero Huergo 1335, Buenos Aires.
AUSTRALIA.	
South Australia	J. N. Taylor & Co., 121/5, Grenfell St., Adelaide.
Victoria	Finlay Bros. (Pty) Ltd., 316/20, Elizabeth St., Melbourne C.1.
West Australia	Mortlock Bros., 914, Hay Street, Perth.
N.S.W. and Queensland ...	Bennett & Wood Ltd., Corner Bathurst and Pitt Streets, Sydney and 128, Wickham St., Valley, Brisbane.
Tasmania	Sim King (Pty) Ltd., (Box A. 240G G.P.O.), 63, Bisbane Street, Launceston.
AUSTRIA	Maximillian Koeniger Strubenring 20, Vienna 1.
AZORES	Hayes & Travell Ltd., P.O. Box 56, Ponta Delgada, St. Michael's.
BAHAMAS	Nassau Bicycle Co., P.O.Box 191, Nassau.
BAHREIN	United Commercial Agencies, P.O. Box 166, Bahrein Islands, Persian Gulf.
BELGIAN CONGO.	
Albertville	La Sima S.C.R.L., P.O. Box 671, Elizabethville.
Bukavu	Touriel Motors, P.O. Box 796, Bukavu.
Coquilhatville	Ets. Fr. Mechant et Fils, P.O. Box 786, Leopoldville.
Elizabethville	La Sima, Boite Postale 671, Elizabethville.
Leopoldville	Ets. Fr. Mechant et Fils, P.O. Box 786, Leopoldville.
Usumbura	Capelluto Touriel & Co., P.O. Box 501, Usumbura, Ruanda Urundi.
Stanleyville	Nassers Trading Co. Ltd., P.O. Box 71.
BELGIUM	Ets. Moorkens S.A., 571, Grande Chaussée, Berchem, Antwerp.
BERMUDA	Holmes, Williams & Purvey Ltd., P.O. Box 444, Pembroke.
BOLIVIA	Balfour Williamson Merchant Shippers Limited 7, Gracechurch St., London, E.C.3, operating through: Gibbs Williamson (Bolivia) Ltd., Casilla 957, La Paz.
BORNEO.	
Br. N. Borneo	Harrisons & Crosneld (Borneo) Ltd., Import Dept., Jesselton.
Sarawak	The Borneo Co. Ltd., (P.O. Box 141), Thomson Road, Kuching.
BOUGAINVILLE	Bennett & Wnod Ltd., Corner Pitt & Bathurst Streets, Sydney, N.S.W., Australia.
BRAZIL	Mesbla S.A., Rua de Passeio 48/54, Rio de Janeiro.
and branches at	Sao Paulo (Est. de Sao Paulo)—Rua 24 de Maio, 141.
BRAZIL	Porto Alegre (R.G. do Sul)—Rua Voluntarios de Patria 524.
	Belo Horizonte (Minas Gerais)—Rua Curitiba, 444–464.
	Recife (Pernambuco)—Rua de Palma 251.
	Pelotas (R.G. do Sul)—Praca Cel. P. Osorio, 152–154.
	Niteroi (Est. do Rio)—Rua Visconde Rio Branco 521-523.
	Marilia (Sao Paulo)—Rua 9 de Julho 1001.
	Victoria (Espirato Santo)—Av. Victoria 719–727.
	Salvador (Bahia)—Av. Frederico Pontes, 102–104.
BRITISH E. AFRICA.	
Kenya	Hughes Ltd., P.O. Box 30060, Nairobi.
Tanganyika	Inertnational Motor Mart Ltd., P.O. Box 409, Dar-es-Salaam.
Uganda	The Uganda Co. (Africa) Ltd., P.O. Box 1, Kampala.
Zanzibar	Musa Jusabani, P.O. Box 366, Zanzibar.
BRITISH GUIANA	Bookers Stores Ltd., 49/53, Water St., Georgetown.
BRITISH HONDURAS ...	Santiago Castillo, Box 69, Belize.
BRITISH SOMALILAND ...	Arabian Trading Co., Berbera.
BRITISH W. AFRICA.	
Gambia	Cie. F.A.O., Bathurst.
Ghana	Cie. F.A.O., P.O. Box 70, Accra.
Nigeria	Cie. F.A.O., P.O. Box 160, Lagos.
Sierra Leone	Cie. F.A.O., Freetown.
(and other branches throughout territory)	
BRITISH W. INDIES.	
Antigua, Leeward Is. ...	Stephen R. Mendes Ltd., Colonial House, 18, Thames St., St. John's.
Barbados	Redman & Taylors Garage Ltd., P.O. Box 269, Church Street, Bridgetown.
Dominica, Leeward Is. ...	A. C. Shillingford & Co., P.O. Box 123, The Garage, Roseau.
Grenada, Windward Is. ...	Glean's Garage, St. Patricks.
Jamaica	B.S.A. Agency Ltd., P.O. Box 3, Denham Town, Kingston.
St. Kitts, Leeward Is. ...	J. W. Thurston & Co. Ltd., Fort St., Basseterre.
St. Lucia, Windward Is. ...	Peter & Co., Castries.
Montserrat, Leeward Is. ...	M. S. Osborne, Trescellian House.
Nevis, Leeward Is.	J. W. Thurston & Co. Ltd., Fort St., Basseterre. St. Kitts.
St. Vincent, Windward Is.	Corea & Co. Ltd., Kingston, St. Vincent.
Trinidad	Sports & Games Ltd., (P.O. Box 271), 28, Henry Street, Port of Spain.
BURMA	Levetus Limited, 194, Bishopsgate, London E.C.2, operating through: Fairweather Richards & Co. Ltd., 67/69, Lewis St., Rangoon.
CANADA.	
British Columbia & Alberta	Fred Deeley Ltd., 606, E. Broadway Ave., Vancouver.
Newfoundland	Edwin Murray Ltd., 256, Water St., St. John's.
Nova Scotia	Mr. L. C. Comeau, Comeauville, Nova Scotia.

CANADA.	
Ontario	Percy A. McBride & Co. Ltd., 15, Devonshire Row, Bishopsgate, London, E.C.2.
Quebec	Arlington Cycle & Sports Ltd., The Forum, 1410, Closse St., Montreal.
Saskatchewan & Manitoba	Nicholson Bros., 245, Second Ave. North, Saskatoon.
CANARY ISLANDS	J. Gonzalez Suarez, Nicolas Estevanez, 4 Puerto de la Luz, Las Palmas.
CEYLON	Cargills (Ceylon) Ltd., Fort, Colombo, P.O. Box 23.
CHINA	M. D. Ewart & Co. Ltd., 15, Devonshire Row, Bishopsgate, London, E.C.2.
COOK ISLANDS	United Island Traders Ltd., (W. H. Watson), Raratonga.
COLOMBIA	Balfour Williamson Merchant Shippers Limited, 7, Gracechurch St., London E.C.3, operating through: Tracey & Co. S.A., Apartado 1196, Bogota.
COSTA RICA	Almacen Lagranja S.A., Apartado Postale "R."
CUBA	Distribudora de Motocicletas Britanicas, S.A. Padre Varela, Havana, Cuba, P.O. Box 962.
CYPRUS	S & G Collocassides Ltd., 1–3, Heraclius Ave., Box 91, Nicosia, Cyprus.
CYRENAICA	Metcalfe Eng. Co. Ltd., P.O. Box 216, Benghazi.
DENMARK	B.S.A. Motors & Cycles (H. V. Hansen), G1, Kongevej 127–131, Copenhagen, V.
DOMINICAN REPUBLIC ...	General Sales Co., Apartado 746, Ciudad Trujillo, R.D.
DUTCH GUIANA	The New Motor Supply & Importing Co. (P.O. Box 422), Watermolen St., Paramaribo
ECUADOR	Balfour Williamson Merchant Shippers Limited, 7, Gracechurch St., London E.C.3, operating through: Sociedad Anonima Comercial, Anglo-Ecuatoriana, Apartado 410, Guayaquil.
EGYPT	T. W. M. Forsyth, 7, Sharia Maspero, Cairo.
ERITREA	Arabian Trading Co. Ltd., Viale Blattenchieta Lorenzo Tazaz, 29–33, Asmara.
ETHIOPIA	Arabian Trading Co. (P.O. Box 23), 155, Cunningham Street, Addis Ababa.
FALKLAND ISLANDS	The Falkland Island Co. Ltd., Port Stanley. McAtasney & Sedgwick, Falkland Store, Stanley.
FAROE ISLANDS	Charles Smith, Trondargota 35, Tnorshann, Faroe Islands.
FIJI	Morris Hedstrom Ltd., Suva.
FINLAND	S. & N. Osakeyhito, N. Esplanade 19, Elsinfors.
FRANCE	Movea S.A., 79, Ave. de la Grande Armée, Paris XVIe.
FR. ANTILLES (Guadeloupe)	Maison F. D'Alexis 44, Rue Frebault, Pointe-à-Pitre.
FRENCH INDIA	Levetus Ltd., 194, Bishopsgate, London E.C.2.
FRENCH SOMALILAND ...	Arabian Trading Co., Djibouti.

FRENCH W. AFRICA.	
Dahomey	Cie. F.A.O., Service Autos, Cotonou.
French Cameroons	Cie. F.A.O., Duala.
Ivory Coast	Cie. F.A.O., Abidjan.
Mauritania	The United Africa Co., Unilever House, Blackfriars, E.C.4, operating through: Compagnie Du Niger Français, Boite Postale No. 230, Saint-Louis, Senegal.
French Guinea	The United Africa Co., operating through: Cie. du Niger Français, Conakry.
French Sudan	The United Africa Co., operating through: Cie. du Niger Françiais, Bamako.
Senegal	The United Africa Co., operating through: Nouvelle Societé Commerciale Africaine, 31, Boulevard Pinet-Laprade, Dakar.
GERMANY (West)	Messrs. Alan W. A. Bruce, P.O. Box 123, Cologne, 17.
GIBRALTAR	English Garage Ltd., Queensway, Gibraltar.
GILBERT & ELLICE ISLANDS	Morris Hedstrom Ltd., Apia, Samoa.
GREECE	D. F. Papoutsas, 56, Chalcocondillis St., Athens.
GUADELOUPE	Maison F. D'Alexis, 44, Rue Frebault, Pointe-a-Pitre.
HADRAMUT	Arabian Trading Co., Esplanade, Aden.
HAITI	Mr. J. Taverne, c/o Motor Services, Rue Dantes Destouches No. 22, P.O. Box 1225, Port au Prince.
HAWAII ISLANDS	Hap Alzina, 3074, Broadway, Oakland 11, California, U.S.A.
HONDURAS	M. Liebers, Apartado 51, Tegucigalpa, D.C.
HONG KONG	Levetus Limited, 194, Bishopsgate, London, E.C.2, operating through: British Bicycle Co., 16, Hennessy Road.
ICELAND	Falkinn Ltd., P.O. Box 997, Rejkjavik.
INDIA	Levetus Limited, 194, Bishopsgate, London, E.C.2, and branches in Delhi, Bombay and Calcutta, operating through:
Bombay	Mr. M. N Kamat, 19/21, Hamam St., Fort, Bombay, 1.
Calcutta	Messrs Rai Chondhuri & Bose 56/1 Canning Street, Calcutta.
Madras	Messrs Wilson & Co. (Private) Ltd. North Raslway Terminus Road, Rovapuram, Madras
INDONESIA	P. T. Platon (Platon Trading Co.) Postrommel Dak 766, Djakarta-Kota.
IRAQ	Mr. J. A. Noury, 2/111, Rashid Street, Baghdad Iraq.
IRISH REPUBLIC	Huet. Bros. Ltd., 7 and 8, Bachelor's Walk, Dublin, C.9.
ISRAEL	S. Gousman & Son Ltd., 16, Hakishon Street, Tel-Aviv.
ITALIAN SOMILAND ...	Arabian Trading Co., Esplanade, Aden.
ITALY (North)	S.R.L. Ghe-Ba, Vial Gian Galleazzo, 29 Milan
JAPAN	Balcom Trading Co. Inc., Fukoku Building No. 1, 2-Chome Uchisaiwai-Cho, Chiyoda-Ku, Tokyo.
KOREA	Balcom, Trading Co. Inc., Fukoku Building No. 1, 2-Chome Uchisaiwai-Cho, Chiyoda-Ku Tokyo.
KUWAIT	Abdul Rahman Albisher & Zaid Alkezemi, Kuwait, Persian Gulf.
LEBANON	Associated Commercial Enteprse, P.O. Box 3270, Air Moureisseh, Beirut.

LIECHENSTEIN	Fibag, Postfacich, h Zurich 39, ZurSwitzerland.
LIBERIA	Cie. F.A.O., Monravia.
LIBYA.	
Tripolitania	F.lli Pagani Soc. Coll, 33 Giaddat Omar Muktar.
Cyrenaica	Metcalfe Eng. Co. Ltd., P.O. Box 216, Benghazi.
LUXEMBOURG	Ets. Moorkens S.A., 571, Grande Chaussée, Berchem, Antwerp, Belgium.
MADAGASCAR	Movea, S.A. 79 Ave. de la Grande Armée, Paris XVIe, France.
MADERIA	A Gomez Loja, P.O. Box 52, Funchal.
MALAYA	Cycle & Carriage Co. (1926) Ltd., (P.O. Box 142), Orchard Road, Singapore.
MALTA	G. Anastasi, 27 and 35 opp. St. John's Church, Valletta.
MAURITIUS	Lising & Co., 32, Royal Street, Port Louis.
MEXICO	Watson Phillips & Cia. Succs. S.A., Apartado Postal No. 67, Mexico 6 D.F.
	Alejandro Dominguez Font Calle 60, Num. 536, Merida, Yucatan.
NETHERLANDS	Hart Nibbrig & Greeve N.V., Parkstraat 91A, The Hague.
NETHERLANDS ANTILLES (D.W.I.)	Caribbean Sales (P.O. Box 43), Noordstraat No. 543, Orangestad, Aruba.
	Caribbean Sales, Joh. van Walbeek, Plein N.4.A Curacao
NEW BRITAIN	Bennett & Wnod (Pty.) Ltd., Corner Pitt and Bathurst Streets, Sydney, N.S.W. Australia.
NEW CALEDONIA	Agence Automobile, Boite Postale 1, Nouméa Nouvelle Caledonia.
NEW GUINEA	Bennett & Wood Ltd., Corner Pitt and Bathurst Streets, Sydney, N.S.W. Australia.
NEW HEBRIDES	Bennett & Wood Ltd., Corner Pitt and Bathurst Streets, Sydney, N.S.W., Australia.
NEW IRELAND	Bennett & Wood Ltd., Corner Pitt and Bathurst Streets, Sydney, N.S.W., Australia,
NEW ZEALAND	Skeates & White Ltd., 48, Fort St., Auckland, C1.
NICARAGUA	J. A. Estrada & Cia. Ltda., (Apartado No. 11). Avenida Roosevelt, Managua.
NORTHERN MOROCCO ...	Abraham S. Levy, (P.O. Box 132), Casa Riera 26/28, Tangier.
NORWAY	Erling Sande, Hausmannagt 27, Oslo.
NYASALAND	Mandala Motors, P.O. Box 467, Blantyre.
OKINAWA	Balcom Trading Co. Inc., Fukoku Building No. 1, 2-Chome Uchisaiwai-Cho, Chiyoda-Ku, Tokyo.
PAKISTAN	Levetus Ltd., 194, Bishopsgate, London E.C2., and their branches at Karachi and Dacca, operating through:
(West)	Shahnawaz Ltd., (P.O. Box 655), Victoria Rd., Karachi.
(East)	Crescent Cycle & Motor Co., 161, Nawabpur Road, Dacca.
	Chowdbury & Co,. 379, Sarrajuddoula Road, Chittagong.
PANAMA	Panamoto S.A., P.O. Box 3227, Rep. of Panama.
PAPUA	Bennett & Wood Ltd., Corner Pitt and Bathurst Streets, Sydney, N.S.W., Australia.
PARAGUAY	S.A., Fidencio Perez Cie., 14, de Mayo Pte Franco, Asuncion.
PERSIA (IRAN)...	H. Mohammed Travakolipoor, Ave. Boozar-jomehri, Tehran.
PERU	Balfour Williamson Merchant Shippers Limited, 7, Gracechurch St., London, E.C.3, operating through:
	Milne & Co. S.A., Apartado 684, Lima.
PHILLIPPINES	Campos Rueda & Sons, 421/7, Juan Luna, Manilla.
PORTUGAL ... **(North)**	Silva Neto & Ca. Lda., Anadia.
(South)	Stand Vidal, Rua Josquim Bonifacio, No. 13C, Lisbon, Portugal.
PORTUGESE EAST AFRICA	F. L. Simoes & Co., P.O. Box 13, Beira.
	A. A. Azevedo, P.O. Box 482, Lourenco Marques.
	Gordhandas Valabdas & Filhos, P.O. Box 28. Mozambique.
	Auto Sobressalentes Ltd., P.O. 206, Quelimane.
PORTUGESE WEST AFRICA	Casa Americana Comercial Sarl, Caixa Postal 1208, Luanda.
PORTUGESE GUINEA ...	Nunes & Irmao, C.P. 83, Bissau.
PORTUGESE INDIA	M.S.B. Caculo, Nova Goa.
PUERTO RICO	M. Castro Fernandez & Co. Ltd., (P.O. Box 1579), San Juan 7, Puerto Rico.
QATAR	Kasem and Abdulla Sons of Darwish Fakhroo, Qatar, Persian Gulf.
REUNION ISLES	Movea S.A., 79, Avenue de la Grande-Armee, Paris XVIe, France.
RHODESIA (Northern) ...	Lusaka Auto Electrical Services, P.O. Box 628, Lusaka.
	Messrs. Livingstone Motors Ltd., P.O. Box No. 56, Livingstone.
RHODESIA (Southern) ...	Van Rooyen Motor Cycle Works Ltd., 124, Gray Street, Bulawayo.
	Alick Stuart Ltd., P.O. Box 306, Bulawayo.
	Ray's Engineering Co., 69, 5th Street, P.O. Box 91, Gwelo.
	Gammon Bros., P.O. Box 151, Umtali.
	Johnstons Motor Cycle Supplies (Pvt) Ltd., 28, Pioneer Street, Salisbury.
SALVADOR	La Agencia Nacional Ltda., Avenida Independencia, San Salvador.
SAMOA	Morris Hedstrom Ltd., Apia.
SARAWAK	Borneo Co. Ltd., Borneo House, 62/63, Mark Lane, London, E.C.3.
SAUDI ARABIA ...	Ebrahim Abdullah Juffali & Bros., P.O. Box 297, Jeddah.
SEYCHELLES	Mahe Trading Ltd., Victoria, Mahe.
SOLOMON ISLANDS	Bennett & Wood Ltd., Corner Pitt and Bathurst Streets, Sydney, N.S.W., Australia.
SOUTHERN MOROCCO ...	Africa and Eastern (Near East) Ltd., P.O. Box 519, Casablanca.
	C. Dempers & Co. Ltd., P.O. Box 538, Windhoek.
SPAIN	Commercial Yacobi, Nunez de Balbao 74 Madrid
SPANISH GUINEA	J. Gonzalez Suarez, Nicolas Estevanez, 4, Puerto de la Luz, Las Palmas, Canary Islands.
SUDAN	Geo. Djerejian & Sons, P.O. Box 269, Khartoum.

SWEDEN	A-B. E. Fleron, Malmo.
SWITZERLAND	Fibag, Postfach Zurich 39, Zurich, Van Leisen S.A., 34, Rue de la Synagogue, Geneva.
SYRIA	M. Chafik el Khiami & Co., Rue el Nasr 169, Damascus, Syria.
TAHITI	H. Jean Hamon, Papeete.
TANGIER	Abraham J. Levy, 4, Roe Jeanne D'Arc, Tangier.
THIALAND	Loxley (Bangkok) Ltd., P.O. Box 214, Loxley Building, 304, Suapan Road, Bangkok.
TONGA	E. H. Jones, P.O. Box 34, Nukualofa, Tonga Islands.
TRIPOLITANIA	F.lli Pagani Soc. Coll., 33, Giaddat Omar Muktar, Tripoli, Libya.
TUNISIA	Etabs. Jean Borg, 35, Rue de Marseille, Tunis.
TURKEY	Turkish Automobile Trade Co., Beyoglu Istiklal Caddesi 239, (P.O. Box 32), Beyoglu, Istanbul.

UNION OF SOUTH AFRICA.

Cape Province	Robb Motors Ltd., 102, Strand St., Cape Town, P.O. Box 1100.
	Barnes Garage Ltd., P.O. Box 438, East London.
	The Union Cycle Works, P.O. Box 442, Kimberley.
	Sahds, P.O. Box 149, Queenstown.
	Scotts Garage, 4, Rhodes Street, Port Elizabeth.

UNION OF SOUTH AFRICA

	Messrs. Du Plessis Cycle Store (Pty), Lutz Street, Upington, District Go rdona.
Natal	W. Killerby (Natal) (Pty) Ltd., 281, Umbilo Road, Durban, Natal.
	Jowett Bros., P.O. Box 201, Pietermaritzburg.
Orange Free State	Welkom Motor Supplies (Pty) Ltd., Mooi St., Civic Centre, Welkom.
Transvaal	Jacks Motors (Pty) Ltd., P.O. Box 8479, Johannesburg.
	Shimwell Bros., (Pty) Ltd., P.O. Box 2035, Johannesburg, also at P.O. Box 95, Pretoria.

UNITED STATES OF AMERICA.

East Coast	B.S.A. Incorporated, 639, Passaic Ave., Nutley 10, New Jersey.
West Coast	Hap Alzina, 3074, Broadway Oakland 11, California.
URUGUAY	Linn & Cia. S.A., Casilla Correo 1027, Montevideo.
VENEZUELA	Agencias B.S.A. de Venezuela C.A. 'Groupe Oriel' Calle el Progresso, Urb, Las Acacias, Caracas.
	"Casa del Motociclista" (Rafael E. Montero), Calle 89-E No. 3-A-52, Maracaibo, (Zulia and Falcon).
VIRGIN ISLANDS	B.S.A. Incorporated, 637, Passaic Avenue, Nutley 10, New Jersey.
YEMEN	Arabian Trading Co., Esplanade, Aden.

INDEX, INHALTSVERZEICHNIS, INDICE
Group, Groupe, Gruppe, Grupo 1-19

Cylinder Head Group	Ensemble culasse	Zylinderkopfsatz	Conjunto de la culata	1
Cylinder Crankshaft	Cylindre Vilebrequin	Zylinder Kurbelwelle	Cilindro Ciguëñal	2
Crankcase Alternator	Carter de vilebrequin Alternateur	Kurbelgehause Wechelstromlichmaschine	Caja de ciguëñal Alternador	3
Crankcase Oil Pump	Carter de vilebrequin Pompe à huile	Kurbelgehause Ölpumpe	Caja de ciguëñal Bomba de aceite	4
Gear Cluster	Jeu d'engrenages	Zahnradsatz	Juego de engranajes	5
Gearchange Mechanism	Mécanisme de changement de vitesse	Schaltung	Cambio	6
Footstart and Footchange	Kick-start et selecteur au pied	Kickstart und Fussschaltung	Arrancador y cambio de pies	7
Clutch Complete	Embrayage complet	Kupplung Kompl.	Embrague completa	8
Brake Pedal	Pédale de frein	Fussbremshebel	Pedal de freno	9
Swinging Arm Footrests Battery Holder	Bras oscillant Repose-pied Support de batterie	Schwingarm Fussraste Batteriehalter	Horquilla oscillante Descansa-pie Porta-bateria	10
Tool Box Oil Tank Cover Plate	Boîte à outils Réservoir d'huile Plaque couvercle	Werkzeugkasten Öltank Abdeckplatte	Caja de herramientos Deposito de aceite Tapa del cojinete	11
Mudguards Chainguard Petrol tank	Gardeboue Carter de chaîne Réservoir d'essence	Schutzblech Kettenschutz Benzintank	Guardabarros Guardacadena Deposito de combustible	12
Dual Seat Handlebar	Selle double Guidon	Doppelsitz Lenker	Asiento doble Manillar	13
Front Fork	Fourche av	Vordergabel	Horquilla del.	14
Front Fork	Fourche av	Vordergabel	Horquilla del.	15
Front Wheel	Roue av	Vorderrad	Rueda delantera	16
Rear Wheel	Roue ar	Hinterrad	Rueda trasera	17
Tools Sundries	Outils Piéces diverses	Werkzeuge Sonstige Teile	Herramientos Piezas varias	18
Electrical Equipment	Equipement electrique	Elektr. Ausrüstung	Equipo electrico	19

ELECTRICAL EQUIPMENT, EQUIPEMENT ELECTRIQUE, ELEKTRISCHE AUSRUSTUNG, EQUIPO ELECTRICO

J. LUCAS LTD., GREAT KING STREET, BIRMINGHAM, ENGLAND.

SPARK PLUGS, BOUGIES, ZUNDKERZE, BUJIAS

CHAMPION SPARKING PLUGS LTD., FELTHAM, MIDDLESEX, ENGLAND.

SPEEDOMETERS, COMPTEUR DE VITESSES, TACHOMETER, VELOCIMETROS

SMITHS MOTOR ACCESSORIES, CRICKLEWOOD WORKS, LONDON, ENGLAND.

CARBURETTERS, CARBURATEURS, VERGASER, CARBURADORES

AMAL LTD., HOLFORD ROAD, WITTON, BIRMINGHAM, ENGLAND.

Model Modèle Typen Modelos	Spares No. No. de pièce Ersatzteil-Nr. No. de repuesto	Makers No. No. du fabricant Nr.-Hersteller No. fabricante
B40	87340–0020	Amal 376/253

PISTON CHART
TABLEAU DES PISTONS
KOLBENTABELLE
GRAFICO DE EMBOLOS

Piston complete Piston complet Kolben Kompl. Embolo completa 15341–0075	Compression Ratio Taux de compression Verdichtungsverhältnis Compresión 7 : 1	Piston complete + ½ mm. Piston complet + ½ mm. Kolben Kompl. + ½ mm. Embolo completa + ½ mm. 15341–0077	Piston complete + 1 mm. Piston complet + 1 mm. Kolben Kompl. + 1 mm. Embolo completa + 1 mm. 15341–0079
15341–0082	8.25 : 1	15341–0084	15341–0086
Piston Ring (top) Segment (dessus) Oberring Segmento (superior) 11541–0095	7 : 1 and 8.25 : 1	Piston Ring (top) + ½ mm. Segment (dessus) + ½ mm. Oberring + ½ mm. Segmento (superior) + ½ mm. 11541–0096	Piston Ring (top) + 1 mm. Segment (dessus) + 1 mm. Oberring + 1 mm. Segmento (superior) + 1 mm. 11541–0097
Piston Ring (central) Segment (centrale) Mittelring Segmento (central) 11541–0092	7 : 1 and 8.25 : 1	Piston Ring (central) + ½ mm. Segment (centrale) + ½ mm. Mittelring + ½ mm. Segmento (central) + ½ mm.) 11541–0093	Piston Ring (central) + 1 mm. Segment (centrale) + 1 mm. Mittelring + 1 mm. Segmento (central) + 1 mm. 11541–0094
Piston Ring (bottom) Segment (inférieure) Unterring Segmento (inferior) 11741–0098	7 : 1 and 8.25 : 1	Piston Ring (bottom) + ½ mm. Segment (inférieure) + ½ mm. Unterring + ½ mm. Segmento (inferior) + ½ mm. 11741–0099	Piston Ring (bottom) + 1 mm. Segment (inférieure) + 1 mm. Unterring + 1 mm. Segmento (inferior) + 1 mm. 11741–0100

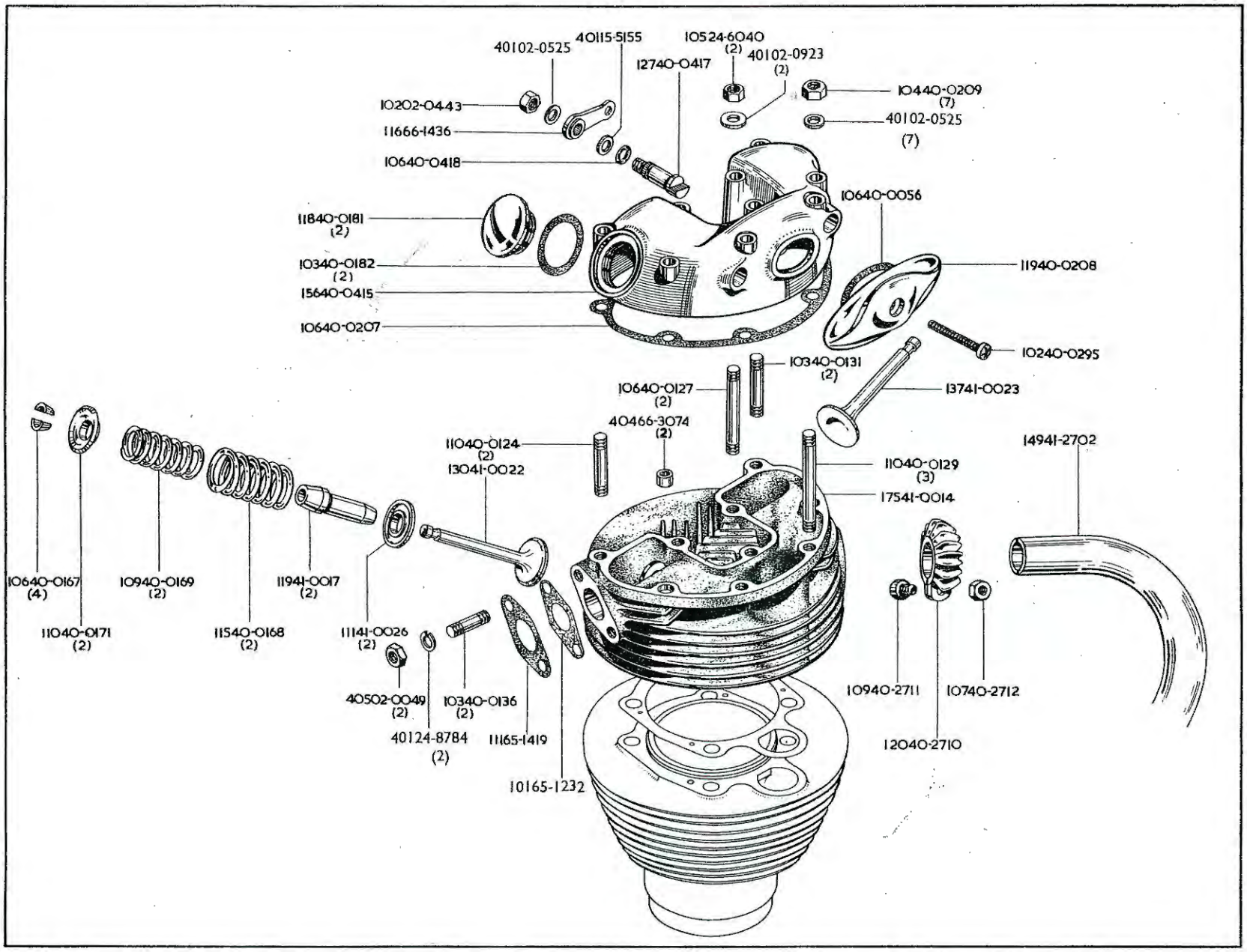
40102-0525
40115-5155
10524-6040
(2)
40102-0923
(2)
12740-0417
10440-0209
(7)
10202-0443
40102-0525
(7)
11666-1436
10640-0418
10640-0056
11840-0181
(2)
10340-0182
(2)
11940-0208
15640-0415
10640-0207
10240-0295
10340-0131
(2)
10640-0127
(2)
13741-0023
40466-3074
(2)
11040-0124
(2)
14941-2702
13041-0022
11040-0129
(3)
17541-0014
10640-0167
(4)
10940-0169
(2)
11941-0017
(2)
11040-0171
(2)
11540-0168
(2)
11141-0026
(2)
40502-0049
(2)
10340-0136
(2)
40124-8784
(2)
11165-1419
10165-1232
10940-2711
10740-2712
12040-2710

CYLINDER HEAD GROUP
ENSEMBLE CULASSE
ZYLINDERKOPFSATZ
CONJUNTO DE LA CULATA

Spares No. No. de pièce Ersatzteil-Nr. No. de repuesto	Description	Designation	Beschreibung	Descripción	Per Set Par jeu Pr. Satz Juego de
— 41-1	Engine and Gearbox complete less Carburetter.	Moteur et boîte de vitesses sans carburateur.	Mort ound Getriebe Ohne Vergaser	Motor y caja de velocidades sin carburador.	
1 31 00-3122	Gasket Set	Pochette de joints	Dichtungen Satz	Jeugo de empaquetaduras	
1 18 00-3123	Decoke Set	Jeu de joint pour décalaminage	Dichtungsatz für Zylinderkopf	Jeugo de empaquetaduras para descarbonización.	
4 05 02-0049	Nut	Ecrou	Mutter	Tuerca	2
1 02 02-0443	Nut	Ecrou	Mutter	Tuerca	
4 01 02-0525	Washer	Rondelle	Scheibe	Arandela	8
4 01 02-0923	Washer	Rondelle	Scheibe	Arandela	2
4 01 15-5155	Washer	Rondelle	Scheibe	Arandela	
1 05 24-6040	Nut	Ecrou	Mutter	Tuerca	2
4 01 24-8784	Lockwasher	Rondelle frein	Sicherungsscheibe	Freno	2
1 06 40-0056	Gasket	Joint	Dichtung	Empaquetadura	
1 10 40-0124	Stud	Goujon	Stehbolzen	Esparago	2
1 06 40-0127	Stud (medium)	Goujon (moyen)	Stehbolzen (Mittel)	Esparago (medio)	2
1 10 40-0129	Stud (long)	Goujon (longue)	Stehbolzen (Lang)	Esparago (largo)	3
1 03 40-0131	Stud (short)	Goujon (courte)	Stehbolzen (Kurz)	Esparago (corte)	2
1 03 40-0136	Stud	Goujon	Stehbolzen	Esparago	2
1 06 40-0167	Collet	Collet	Keil	Refuerzo del cilindro	4
1 15 40-0168	Spring (outer)	Ressort (extérieur)	Aüssere Feder	Resorte (exterior)	2
1 09 40-0169	Spring (inner)	Ressort (intérieur)	Innere Feder	Resorte (interior)	2
1 10 40-0171	Collar	Bague d'arrêt	Stellring	Anillo movil aprisionado	2
1 18 40-0181	Cap	Chapeau	Abdeckkappe	Tapon	2
1 03 40-0182	Sealing Washer	Joint d'étanchéité	Dichtung	Arandela de reten	2
1 06 40-0207	Gasket	Joint	Dichtung	Empaquetadura	
1 19 40-0208	Cover	Couvercle	Schutzkappe	Tapa	
1 04 40-0209	Nut	Ecrou	Mutter	Tuerca	7
1 02 40-0295	Screw	Vis	Schraube	Tornillo	
1 56 40-0415	Rocker Box	Boîtier des culbuteurs	Kipphebelgehäuse	Carter de los brazos oscilantes	
1 27 40-0417	Exhaust Valve Lifter	Poussior De Soupape D'echappement	Auslassventilstössel	Levantavalvula-Escape	
1 06 40-0418	"O" Ring	Bague "O"	"O" Ring	Anillo "O"	
1 20 40-2710	Collar	Bague d'arrêt	Stellring	Anillo movil aprisionado	
1 09 40-2711	Screw	Vis	Schraube	Tornillo	
1 07 40-2712	Nut	Ecrou	Mutter	Tuerca	
1 75 41-0014	Cylinder Head	Culasse	Zylinderkopf	Culata	
1 19 41-0017	Valve Guide	Guide de soupape	Ventilführung	Guia de valvula	2
1 30 41-0022	Inlet Valve	Soupape d'admission	Einlassventil	Válvula de admisión	
1 37 41-0023	Exhaust Valve	Soupape d'échappement	Auslassventil	Válvula de escape	
1 11 41-0026	Cup	Cuvette	Schale	Copa	2
1 49 41-2702	Exhaust Pipe	Tuyau d'échappement	Auspuffrohr	Tubo de escape	
1 01 65-1232	Gasket	Joint	Dichtung	Empaquetadura	
1 11 65-1419	Gasket	Joint	Dichtung	Empaquetadura	
1 16 66 1436	Lever	Levier	Hebel	Palanca	
4 04 66-3074	Dowel	Goujon	Passtift	Pasador	2

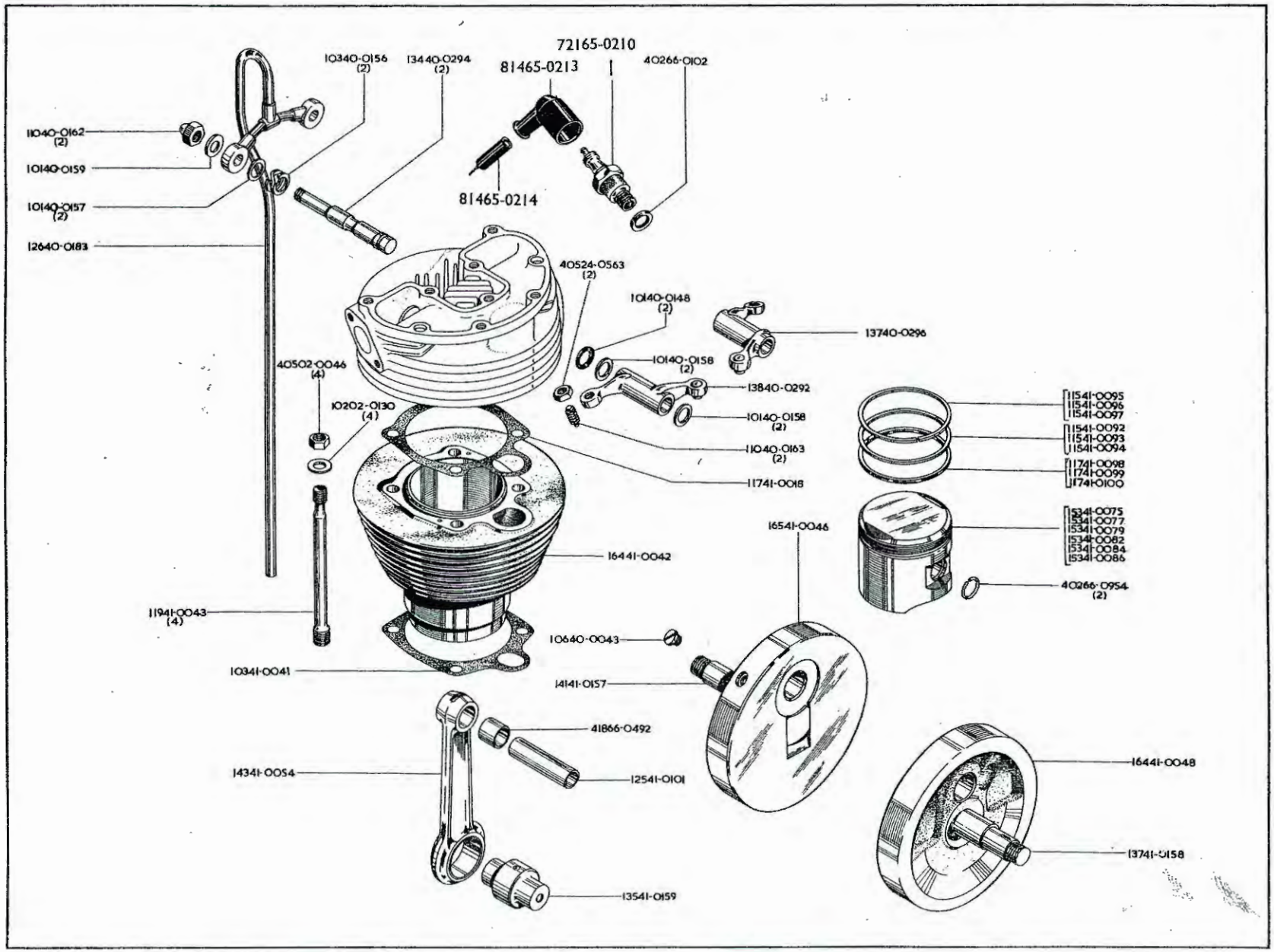
72165-0210
81465-0213
40266-0102
10340-0156 (2)
13440-0294 (2)
11040-0162 (2)
10140-0159
10140-0157 (2)
12640-0183
81465-0214
40524-0563 (2)
10140-0148 (2)
13740-0296
10140-0158 (2)
13840-0292
40502-0046 (4)
10202-0130 (4)
10140-0158 (2)
11040-0163 (2)
11741-0018
11541-0095
11541-0096
11541-0097
11541-0092
11541-0093
11541-0094
11741-0098
11741-0099
11741-0100
15341-0075
15341-0077
15341-0079
15341-0082
15341-0084
15341-0086
16541-0046
16441-0042
40266-0954 (2)
11941-0043 (4)
10640-0043
10341-0041
14141-0157
41866-0492
14341-0054
12541-0101
16441-0048
13741-0158
13541-0159

CYLINDER
CYLINDRE
ZYLINDER
CILINDRO

CRANKSHAFT
VILEBREQUIN
KURBELWELLE
CIGUENAL

Spares No. / No. de pièce / Ersatzteil-Nr. / No. de repuesto	Description	Designation	Beschreibung	Descripción	Per Set / Par jeu / Pr. Satz / Juego de
1 83 41–0045	Crankshaft Assembly	Vilebrequin complet	Kurbelwelle Kompl.	Ciguëñal completa	
1 49 41–0056	Connecting Rod Assembly	Bielle complet	Pleuelstange Kompl.	Biela completa	
4 05 02–0046	Nut	Ecrou	Mutter	Tuerca	4
1 02 02–0130	Washer	Rondelle	Scheibe	Arandela	4
4 05 24–0563	Nut	Ecrou	Mutter	Tuerca	
1 06 40–0043	Plug	Bouchon	Stopfen	Tapon	
1 01 40–0148	"O" Ring	Bague "O"	"O" Ring	Anillo "O"	2
1 03 40–0156	Spring	Ressort	Feder	Resorte	2
1 01 40–0157	Washer	Rondelle	Scheibe	Arandela	2
1 01 40–0158	Washer	Rondelle	Scheibe	Arandela	4
1 01 40–0159	Washer	Rondelle	Scheibe	Arandela	
1 10 40–0162	Nut	Ecrou	Mutter	Tuerca	2
1 10 40–0163	Adjuster Screw	Vis de réglage	Einstellschraube	Tornillo de ajuste	2
1 26 40–0183	Oil Feed Pipe	Tuyauterie d'alimentation d'huile	Ölzufuhrleitung	Tubo de alimentación de aceite	
1 38 40–0292	Inlet Rocker	Culbuteur, admission	Einlasskipphebel	Brazo osc., admisión	
1 34 40–0294	Spindle	Axe	Welle	Arbol	2
1 37 40–0296	Exhaust Rocker	Culbuteur, échappement	Auslasskipphebel	Brazo osc., escape	
1 17 41–0018	Gasket	Joint	Dichtung	Empaquetadura	
1 03 41–0041	Gasket	Joint	Dichtung	Empaquetadura	
1 64 41–0042	Cylinder	Cylindre	Zylinder	Cilindro	
1 19 41–0043	Stud	Goujon	Stehbolzen	Esparago	4
1 65 41–0046	Crankshaft (left-hand)	Vilebrequin (gauche)	Kurbelwelle (Links)	Ciguëñal (izq.)	
1 64 41–0048	Crankshaft (right-hand)	Vilebrequin (droite)	Kurbelwelle (Rechts)	Ciguëñal (derecho)	
1 43 41–0054	Connecting Rod	Bielle	Pleuelstange	Varilla de acoplamiento	
1 53 41–0075	Piston complete (7 : 1)	Piston complet (7 : 1)	Kolben Kompl. (7 : 1)	Embolo completa (7 : 1)	
1 53 41–0077	Piston complete +½ mm. (7 : 1)	Piston complet +½ mm. (7 : 1)	Kolben Kompl. +½ mm. (7 : 1)	Embolo completa +½ mm. (7 : 1)	
1 53 41–0079	Piston complete +1 mm. (7 : 1)	Piston complet +1 mm. (7 : 1)	Kolben Kompl. +1 mm. (7 : 1)	Embolo completa +1 mm. (7 : 1)	
1 53 41–0082	Piston complete (8.25 : 1)	Piston complet (8.25 : 1)	Kolben Kompl. (8.25 : 1)	Embol completa (8.25 : 1)	
1 53 41–0084	Piston complete (8.25 : 1) +½ mm.	Piston complet (8.25 : 1) +½ mm.	Kolben Kompl. (8.25 : 1) +½ mm.	Embolo completa (8.25 : 1) +½ mm.	
1 53 41–0086	Piston complete (8.25 : 1) +1 mm.	Piston complet (8.25 : 1) +1 mm.	Kolben Kompl. (8.25 : 1) +1 mm.	Embolo completa (8.25 : 1) +1 mm.	
1 15 41–0092	Piston Ring	Segment	Kolbenring	Segmento	
1 15 41–0093	Piston Ring (+½ mm.)	Segment (+½ mm.)	Kolbenring (+½ mm.)	Segmento (+½ mm.)	
1 15 41–0094	Piston Ring (+1 mm.)	Segment (+1 mm.)	Kolbenring (+1 mm.)	Segmento (+1 mm.)	
1 15 41–0095	Piston Ring	Segment	Kolbenring	Segmento	
1 15 41–0096	Piston Ring (+½ mm.)	Segment (+½ mm.)	Kolbenring (+½ mm.)	Segmento (+½ mm.)	
1 15 41–0097	Piston Ring (+1 mm.)	Segment (+1 mm.)	Kolbenring (+1 mm.)	Segmento (+1 mm.)	
1 17 41–0098	Piston Ring	Segment	Kolbenring	Segmento	
1 17 41–0099	Piston Ring (+½ mm.)	Segment (+½ mm.)	Kolbenring (+½ mm.)	Segmento (+½ mm.)	
1 17 41–0100	Piston Ring (+1 mm.)	Segment (+1 mm.)	Kolbenring (+1 mm.)	Segmento (+1 mm.)	
1 25 41–0101	Gudgeon Pin	Axe de piston	Kolenbolzen	Bulon de embolo	
1 41 41–0157	Shaft (left-hand)	Arbre (gauche)	Welle (Links)	Arbol (izq.)	
1 37 41–0158	Shaft (right-hand)	Arbre (droite)	Welle (Rechts)	Arból (derecho)	
1 35 41–0159	Crankpin	Maneton de vilebrequin	Kurbelzapfen	Codo del ciguëñal	
7 21 65 0210	Spark Plug	Bougie d'allumage	Zündkerze	Bujia	
8 14 65–0213	Cover	Couvercle	Schutzkappe	Tapa	
8 14 65–0214	Suppressor	Depositif antiparasite	Entstoerter Kabelschuh	Supresor	2
4 02 66–0102	Washer	Rondelle	Scheibe	Arandela	
4 18 66–0492	Bush	Douille	Büchse	Casquillo	
4 02 66–0954	Circlip	Circlip	Sprengring	Freno	2

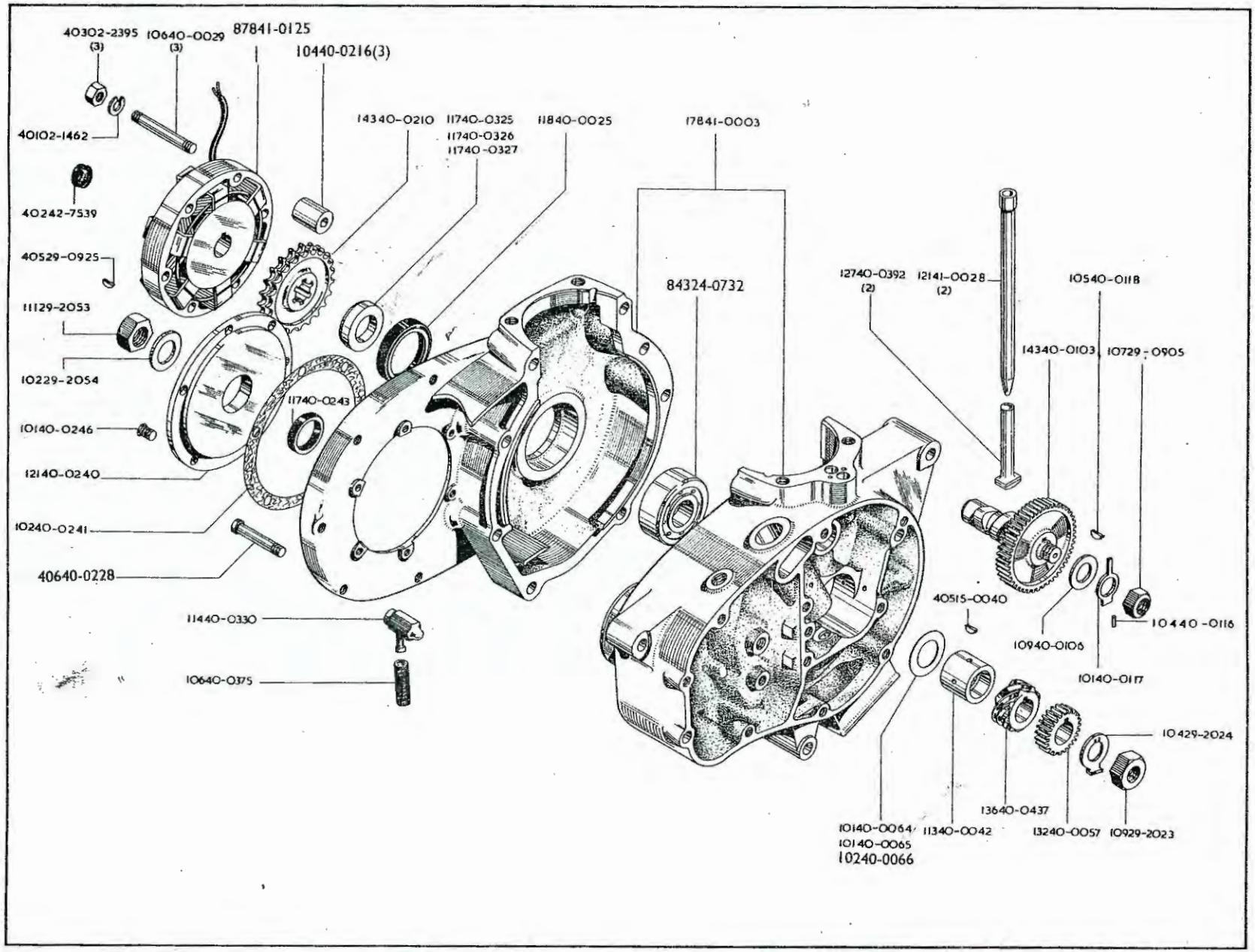
40302-2395 (3)
10640-0029 (3)
87841-0125
10440-0216(3)
40102-1462
14340-0210
11740-0325
11740-0326
11740-0327
11840-0025
17841-0003
40242-7539
40529-0925
84324-0732
12740-0392 (2)
12141-0028 (2)
10540-0118
11129-2053
14340-0103
10729-0905
10229-2054
11740-0243
10140-0246
12140-0240
10240-0241
40640-0228
40515-0040
10440-0116
11440-0330
10940-0106
10640-0375
10140-0117
10429-2024
13640-0437
10140-0064
10140-0065
10240-0066
11340-0042
13240-0057
10929-2023

CRANKCASE
CARTER DE VILEBREQUIN
KURBELGEHAÜSE
CAJA DE CIGUENAL

ALTERNATOR
ALTERNATEUR
LICHTMASCHINE
ALTERNADOR

Spares No. / No. de pièce / Ersatzteil-Nr. / No. de repuesto	Description	Designation	Beschreibung	Descripción	Per Set / Par jeu / Pr. Satz / Juego de
1 78 41-0003	Crankcase complete	Carter de vilbrequin complet	Kurbelgehäuse Kompl.	Caja de ciguëñal completa	
4 01 02-1462	Lockwasher	Rondelle frein	Sicherungsscheibe	Freno	3
4 03 02-2395	Nut	Ecrou	Mutter	Tuerca	3
4 05 15-0040	Woodruff Key	Clavette	Rundkeil	Chaveta Woodruff	
8 43 24-0732	Bearing	Roulement	Lager	Rolamiento	
1 07 29-0905	Nut	Ecrou	Mutter	Tuerca	
4 05 29-0925	Woodruff Key	Clavette	Rundkeil	Chaveta Woodruff	
1 09 29-2023	Nut	Ecrou	Mutter	Tuerca	
1 02 29-2024	Lockwasher	Rondelle frein	Sicherungsscheibe	Freno	
1 11 29-2053	Nut	Ecrou	Mutter	Tuerca	
1 02 29-2054	Washer	Rondelle	Scheibe	Arandela	
1 18 40-0025	Oil Seal	Joint d'huile	Simmerring	Reten de aceite	
1 06 40-0029	Stud	Goujon	Stehbolzen	Esparago	3
1 13 40-0042	Sleeve	Douille	Büchse	Casquillo	
1 32 40-0057	Pinion	Pignon	Zahnrad	Piñón	
1 01 40-0064	Washer (.003 in.)	Rondelle (.076 mm.)	Scheibe (.076 mm.)	Arandela (.076 mm.)	
1 01 40-0065	Washer (.005 in.)	Rondelle (.127 mm.)	Scheibe (.127 mm.)	Arandela (.127 mm.)	
1 02 40-0066	Washer (.010 in.)	Rondelle (.254 mm.)	Scheibe (.254 mm.)	Arandela (.254 mm.)	
1 43 40-0103	Camshaft complete	Arbre de cames complet	Nockenwelle Kompl.	Arból de levas completa	
1 09 40-0106	Washer	Rondelle	Scheibe	Arandela	
1 04 40-0116	Peg	Ergot	Stift	Esparago	
1 01 40-0117	Lockwasher	Rondelle frein	Sicherungsscheibe	Freno	
1 05 40-0118	Woodruff Key	Clavette	Rundkeil	Chaveta Woodruff	
1 43 40-0210	Sprocket 23T	Pignon D-23	Ritzel Z-23	Piñon D-23	
1 04 40-0216	Spacer Tube	Tube entretoise	Distanzrohr	Tubo espaciador	3
4 06 40-0228	Bolt	Boulon	Schraube	Tornillo	
1 21 40-0240	Cover Plate	Plaque couvercle	Lagerdeckel	Tapa de cojinete	
1 02 40-0241	Gasket	Joint	Dichtung	Empaquetadura	
1 17 40-0243	Oil Seal	Joint d'huile	Simmerring	Reten de aceite	
1 01 40-0246	Screw	Vis	Schraube	Tornillo	6
1 17 40-0325	Distance Piece (.324—.327 in.)	Entretoise (8.230—8.306 mm.)	Distanzrohr (8.230—8.306 mm.)	Distanciador (8.230—8.306 mm.)	
1 17 40-0326	Distance Piece (.309—.312 in.)	Entretoise (.7849—7.924 mm.)	Distanzrohr (7.849—7.924 mm.)	Distanciador (7.849—7.924 mm.)	
1 17 40-0327	Distance Piece (.249—.297 in.)	Entretoise (7.468—7.544 mm.)	Distanzrohr (7.468—7.544 mm.)	Distanciador (7.468—7.544 mm.)	
1 14 40-0330	Oil Feed Union	Raccord d'alimentation d'huile	Ölzufuhrverbindung	Union de la tuberia de alimentación de aceite.	
1 06 40-0375	Oil Pipe	Conduit ou canalisation d'huile	Ölleitung	Conección del engrase	
1 27 40-0392	Tappet	Poussoir	Stössel	Botador de valvula	2
1 36 40-0437	Contact Breaker Drive	Entraînement du rupteur	Unterbrecherantrieb	Accionamiento del interruptor	
1 21 41-0028	Push Rod	Tige de culbuteur	Stösselstange	Varilla	2
8 78 41-0125	Alternator	Alternateur	lichtmaschine	Alternador	
4 02 42-7539	Grommet	Rondelle capuchon	Tülle	Manguera	

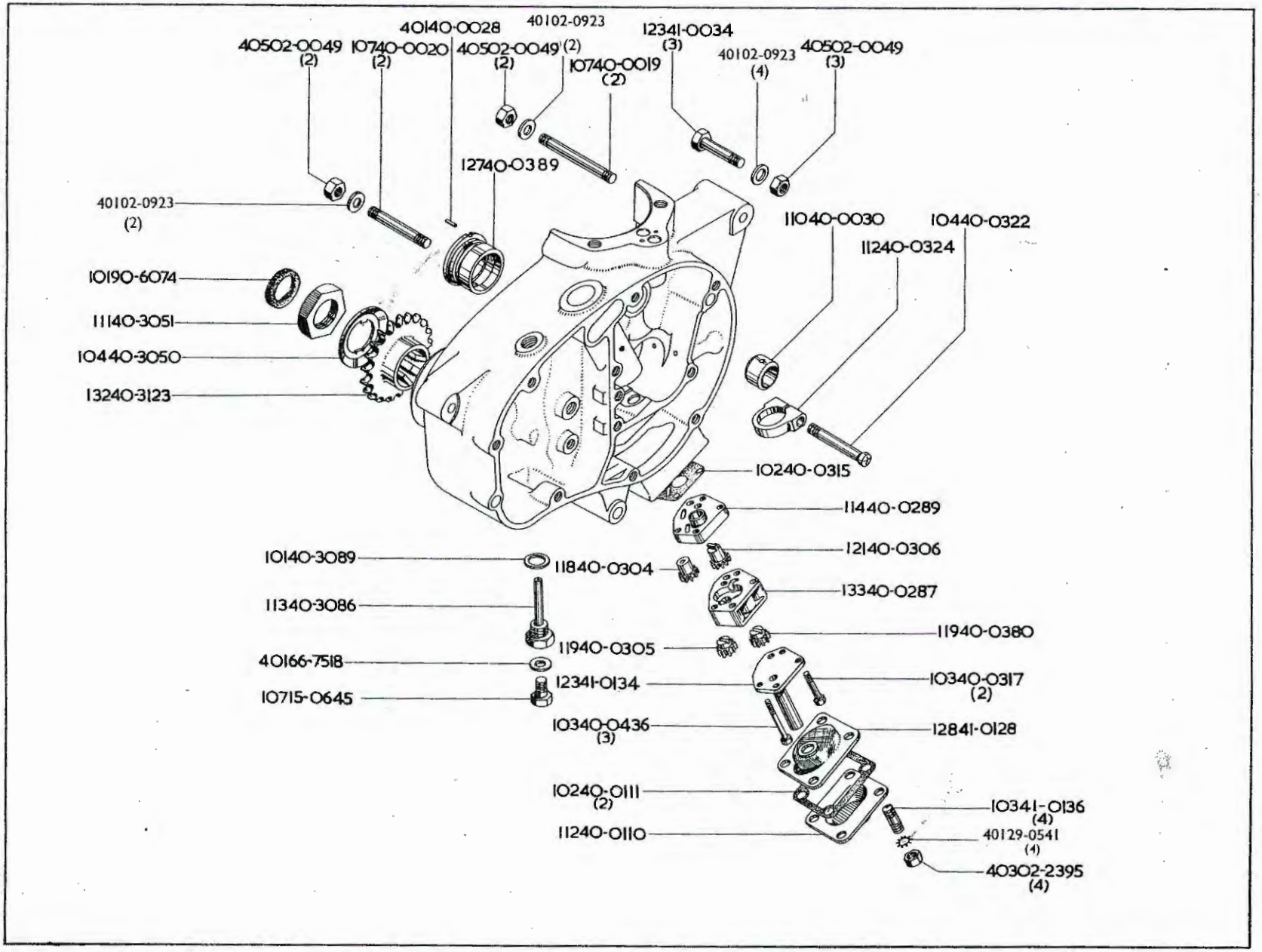
40502-0049 (2)
10740-0020 (2)
40140-0028
40102-0923
40502-0049 (2)
10740-0019 (2)
12341-0034 (3)
40102-0923 (4)
40502-0049 (3)
12740-0389
40102-0923 (2)
10190-6074
11140-3051
10440-3050
13240-3123
11040-0030
10440-0322
11240-0324
10240-0315
11440-0289
12140-0306
13340-0287
11940-0380
10340-0317 (2)
12841-0128
10341-0136 (4)
40129-0541 (4)
40302-2395 (4)
10140-3089
11840-0304
11340-3086
11940-0305
40166-7518
12341-0134
10715-0645
10340-0436 (3)
10240-0111 (2)
11240-0110

CRANKCASE
CARTER DE VILEBREQUIN
KURBELGEHÄUSE
CAJA DE CIGUENAL

OIL PUMP
POMPE À HUILE
ÖLPUMPE
BOMBA DE ACEITE

Spares No. No. de pièce Ersatzteil-Nr. No. de repuesto	Description	Designation	Beschreibung	Descripción	Per Set Par jeu Pr. Satz Juego de
1 48 41–0133	Oil Pump complete	Pompe à huile complet	Ölpumpe Kompl.	Bomba de aceite completa	
4 05 02–0049	Nut	Ecrou	Mutter	Tuerca	7
4 01 02–0923	Washer	Rondelle	Scheibe	Arandela	7
4 03 02–2395	Nut	Ecrou	Mutter	Tuerca	4
1 07 15–0645	Bolt	Boulon	Schraube	Tornillo	
4 01 29–0541	Lockwasher	Rondelle frein	Sicherungsscheibe	Freno	4
1 07 40–0019	Stud	Goujon	Stehbolzen	Esparago	2
1 07 40–0020	Stud	Goujon	Stehbolzen	Esparago	2
4 01 40–0028	Peg	Ergot	Stift	Esparago	
1 10 40–0030	Bush	Douille	Büchse	Casquillo	
1 12 40–0110	Sump Cover	Couvercle de fond de carter	Sumpfdeckel	Carter	
1 02 40–0111	Gasket	Joint	Dichtungen	Empaquetadura	2
1 33 40–0287	Oil Pump Body	Corps de pompe à huile	Ölpumpengehäuse	Cuepo del la bomba de aceite	
1 14 40–0289	Top Cover	Couvercle (sup.)	Schutzkappe (Oben)	Tapa (sup.)	
1 18 40–0304	Feed Gear, Driver	Engrenage d'alimentation, entraîneur.	Zufuhrzahnradantreb	Impulsador del engranaje de alimentación.	
1 19 40–0305	Scavenge Gear, Driver	Engrenage de retour d'huile entraîneur.	Spülzahnrad	Impulsador del engranaje de barrido.	
1 21 40–0306	Feed Gear	Engrenage d'alimentation	Zufuhrzahnrad	Engranaje de alimentación	
1 02 40–0315	Gasket	Joint	Dichtungen	Empaquetadura	
1 03 40–0317	Bolt	Boulon	Schraube	Tornillo	2
1 04 40–0322	Screw	Vis	Schraube	Tornillo	
1 12 40–0324	Clamp	Bride	Lasche	Brida	
1 19 40–0380	Scavenge Gear	Engrenage de retour d'huile	Spülzahnrad	Engranaje de barrido	
1 27 40–0389	Bush	Douille	Büchse	Casquillo	
1 03 40–0436	Screw	Vis	Schraube	Tornillo	3
1 04 40–3050	Lockwasher	Rondelle frein	Sicherungsscheibe	Freno	
1 11 40–3051	Nut	Ecrou	Mutter	Tuerca	
1 13 40-3086	Drain Plug	Bouchon de vidange d'huile	Ablassschraube	Tapón	
1 01 40–3089	Washer	Rondelle	Scheibe	Arandela	
1 32 40–3123	Sprocket 19T	Pignon D–19	Ritzel Z–19	Piñón D–19	
1 10 41–0034	Bolt	Boulon	Schraube	Tornillo	3
1 17 41–0128	Sump Filter	Filtre de carter	Sumpffilter	Filtro de carter	
1 23 41–0134	Scavenge Valve	Soupape de retour d'huile	Spülventil	Valvula de barrido	
1 03 41–0136	Stud	Goujon	Stehbolzen	Esparago	4
4 01 66–7518	Washer	Rondelle	Scheibe	Arandela	
1 01 90–6074	Felt Washer	Rondelle feutre	Filzscheibe	Arandela de fieltro	

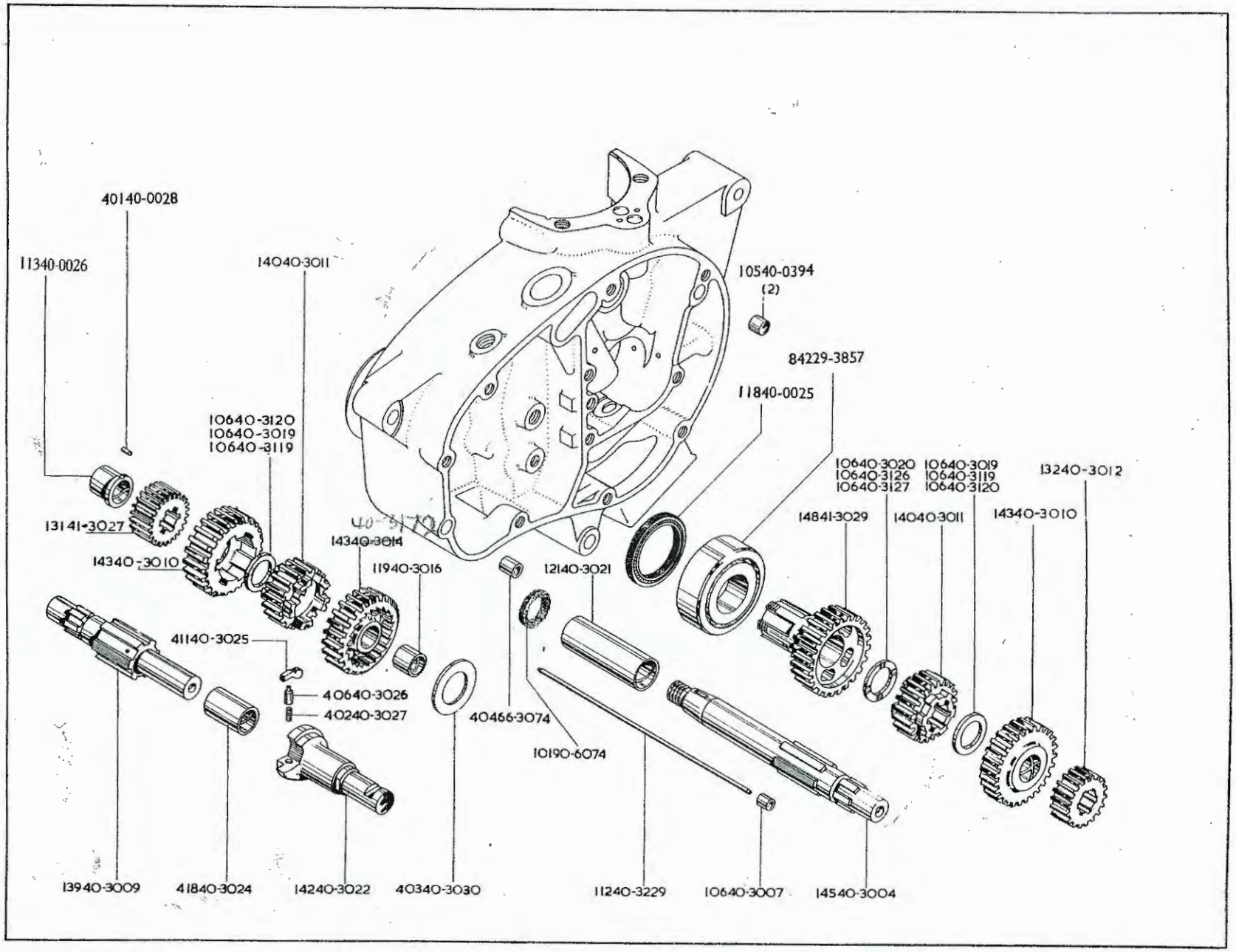
40140-0028
11340-0026
14040-3011
10540-0394
(2)
84229-3857
11840-0025
10640-3120
10640-3019
10640-3119
10640-3020
10640-3126
10640-3127
10640-3019
10640-3119
10640-3120
13240-3012
13141-3027
14841-3029
14040-3011
14340-3010
14340-3014
14340-3010
11940-3016
12140-3021
41140-3025
40640-3026
40240-3027
40466-3074
10190-6074
13940-3009
41840-3024
14240-3022
40340-3030
11240-3229
10640-3007
14540-3004

GEAR CLUSTER
JEU D'ENGRENAGES
ZAHNRADSATZ
JUEGO DE ENGRANAJES

Spares No. No. de pièce Ersatzteil-Nr. No. de repuesto	Description	Designation	Beschreibung	Descripción	Per Set Par jeu Pr. Satz Juego de
8 42 29–3857	Bearing	Roulement	Lager	Rolamiento	
1 18 40–0025	Oil Seal	Joint d'huile	Simmerring	Reten de aceite	
1 13 40–0026	Bush	Douille	Büchse	Casquillo	
4 01 40–0028	Peg	Ergot	Stift	Esparago	
1 05 40–0394	Dowel	Goujon	Passtift	Pasador	2
1 45 40–3004	Mainshaft	Arbre primaire	Getriebewelle	Arból principal	
1 06 40–3007	Bush	Douille	Büchse	Casquillo	
1 39 40–3009	Layshaft	Arbre secondaire	Vorgelegewelle	Arból de reenvio	
1 43 40–3010	Pinion 27T	Pignon D–27	Zahnrad Z–27	Piñón D–27	2
1 40 40–3011	Pinion 23T	Pignon D–23	Zahnrad Z–23	Piñón D–23	2
1 32 40–3012	Pinion 18T	Pignon D–18	Zahnrad Z–18	Piñón D–18	
1 43 40–3014	Pinion 32T	Pignon D–32	Zahnrad Z–32	Piñón D–32	
1 19 40–3016	Bush	Douille	Büchse	Casquillo	
1 06 40–3019	Washer (.076—.075 in.)	Rondelle (1.930—1.905 mm.)	Scheibe (1.930—1.905mm.)	Arandela (1.930—1.905 mm.)	2
1 06 40–3020	Washer (.094—.093 in.)	Rondelle (2.387—2.362 mm.)	Scheibe (2.387—2.362 mm.)	Arandela (2.387—2.362 mm.)	
1 21 40–3021	Bush	Douille	Büchse	Casquillo	
1 42 40–3022	Kickstart Spindle	Arbre du kick	Kickstarterwelle	Arbol del arrancador	
4 18 40–3024	Bush	Douille	Büchse	Casquillo	
4 11 40–3025	Pawl	Cliquet	Klaue	Trinquete	
4 06 40–3026	Plunger	Plongeur	Plunger	Buzo	
4 02 40–3027	Spring	Ressort	Feder	Resorte	
4 03 40–3030	Retainer	Arrêtoir	Sicherung	Freno	
1 06 40–3119	Washer (.071—.070 in.)	Rondelle (1.803—1.778 mm.)	Scheibe (1.803—1.778 mm.)	Arandela (1.803—1.778 mm.)	2
1 06 40–3120	Washer (.081—.080 in.)	Rondelle (2.057—2.032 mm.)	Scheibe (2.057—2.032 mm.)	Arandela (2.057—2.032 mm.)	2
1 06 40–3126	Washer (.099—.098 in.)	Rondelle (2.514—2.489 mm.)	Scheibe (2.514—2.489 mm.)	Arandela (2.514—2.489 mm.)	
1 06 40–3127	Washer (.104—.103 in.)	Rondelle (2.641—2.616 mm.)	Scheibe (2.641—2.616 mm.)	Arandela (2.641—2.616 mm.)	
1 12 40–3229	Clutch Rod	Tige d'embrayage	Kupplungsdruckstange	Varilla de acoplamiento	
1 31 41–3027	Pinion 17T	Pignon D–17	Zahnrad Z–17	Piñón D–17	
1 48 41–3029	Pinion 26T	Pignon D–26	Zahnrad Z–26	Piñón D–26	
4 04 66–3074	Dowel	Goujon	Passtift	Pasador	
1 01 90–6074	Felt Washer	Rondelle feutre	Filzscheibe	Arandela de fieltro	

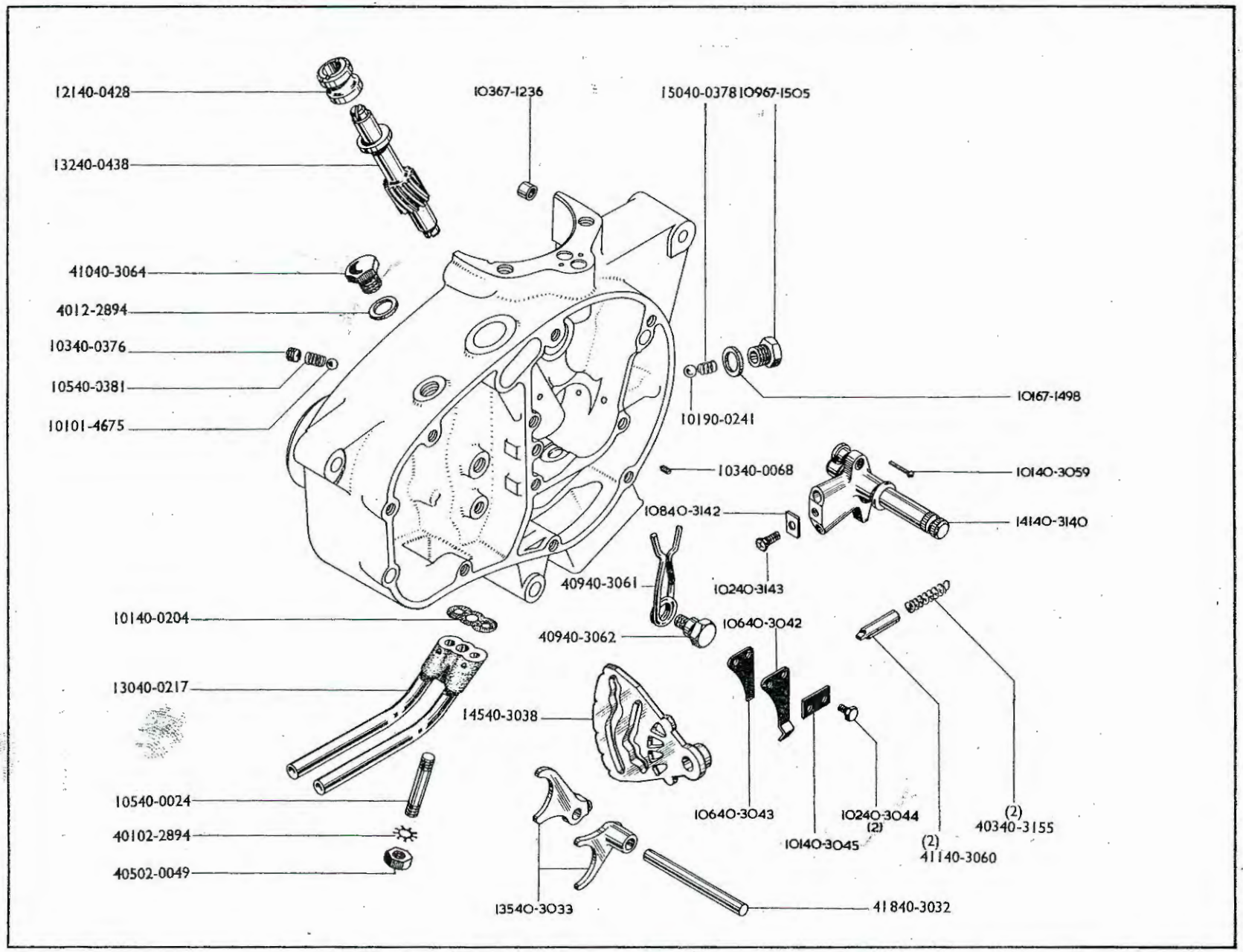
12140-0428
13240-0438
10367-1236
15040-0378
10967-1505
41040-3064
4012-2894
10340-0376
10540-0381
10101-4675
10190-0241
10167-1498
10340-0068
10140-3059
10840-3142
14140-3140
10240-3143
40940-3061
10140-0204
40940-3062
10640-3042
13040-0217
14540-3038
10540-0024
40102-2894
40502-0049
10640-3043
10240-3044
(2)
10140-3045
(2)
41140-3060
(2)
40340-3155
13540-3033
41840-3032

GEARCHANGE MECHANISM
MÉCANISME DE CHANGEMENT DE VITESSE
SHALTUNG
CAMBIO

Spares No. No. de pièce Ersatzteil-Nr. No. de repuesto	Description	Designation	Beschreibung	Descripción	Per Set Par jeu Pr. Satz Juego de
1 41 40-3140	Quadrant complete	Secteur complet	Quadrant Kompl.	Sector completa	
1 01 01-4675	Ball	Bille	Kugel	Bola	
4 05 02-0049	Nut	Ecrou	Mutter	Tuerca	
4 01 02-2894	Sealing Ring	Bague d'étanchéité	Dichtring	Junta	
4 01 36-0382	Lockwasher	Rondelle frein	Sicherungsscheibe	Freno	
1 05 40-0024	Stud	Goujon	Stehbolzen	Esparago	
1 03 40-0068	Screw	Vis	Schraube	Tornillo	
1 01 40-0204	Gasket	Joint	Dichtungen	Empaquetadura	
1 30 40-0217	Oil Pipe	Conduit d'huile	Ölleitung	Conección de engrase	
1 03 40-0376	Screw	Vis	Schraube	Tornillo	
1 05 40-0378	Spring	Ressort	Feder	Resorte	
1 05 40-0381	Spring	Ressort	Feder	Resorte	
1 21 40-0428	Bush	Douille	Büchse	Casquillo	
1 32 40-0438	Contact Breaker Driven Gear	Entraînement du rupteur	Unterbrechertrieb	Accionamiento del interruptor	
4 18 40-3032	Spindle	Arbre	Welle	Arbol	
1 35 40-3033	Selector Fork	Fourchette de sélecteur	Schaltgabel	Horquilla de mando de caja de velocidades.	2
1 45 40-3038	Camplate	Plaque de came	Nockenplatte	Placa de leva	
1 06 40-3042	Spring	Ressort	Feder	Resorte	
1 06 40-3043	Spring Plate	Plaque à ressort	Federplatte	Placa de resorte	
1 02 40-3044	Screw	Vis	Schraube	Tornillo	2
1 01 40-3045	Lockwasher	Rondelle frein	Sicherungsscheibe	Freno	
1 01 40-3059	Rivet	Rivet	Niete	Remache	2
4 11 40-3060	Plunger	Plongeur	Plunger	Buzo	2
4 09 40-3061	Spring	Ressort	Feder	Resorte	
4 09 40-3062	Bolt	Boulon	Schraube	Tornillo	
4 10 40-3064	Plug	Bouchon	Stopfen	Tapon	
1 08 40-3142	Plate	Plaque	Scheibe	Placa	
1 02 40-3143	Screw	Vis	Schraube	Tornillo	2
4 03 40-3155	Spring	Ressort	Feder	Resorte	2
1 03 67-1236	Dowel	Goujon	Passtift	Pasador	
1 01 67-1498	Sealing Ring	Bague d'étanchéité	Dichtring	Junta	
1 09 67-1505	Release Valve	Soupape de décharge	Überdruckventil	Valvula disparadora	
1 01 90-0241	Ball	Bille	Kugel	Bola	

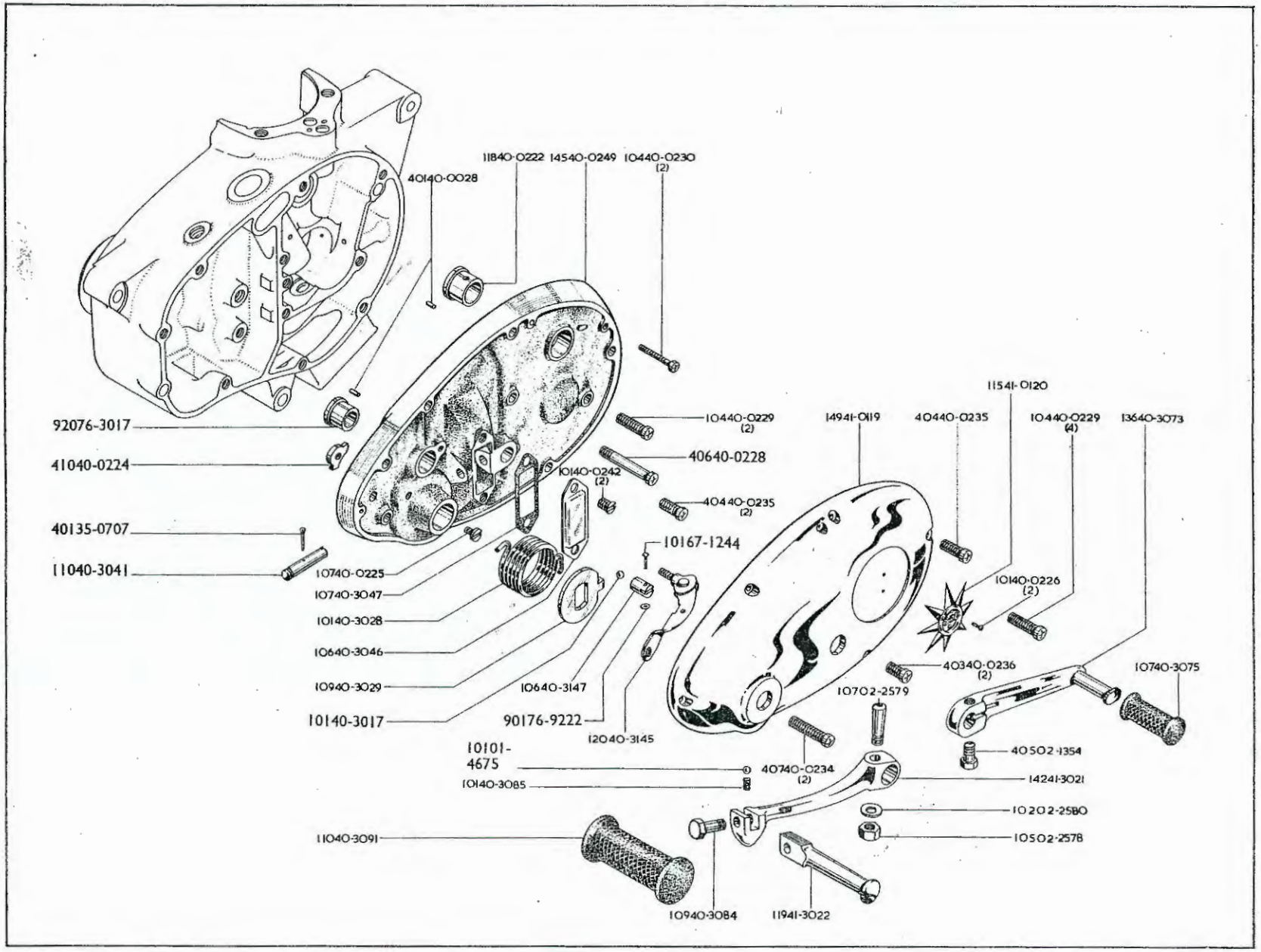
11840-0222
14540-0249
10440-0230 (2)
40140-0028
92076-3017
41040-0224
40135-0707
11040-3041
10440-0229 (2)
40640-0228
10140-0242 (2)
40440-0235 (2)
10167-1244
10740-0225
10740-3047
10140-3028
10640-3046
10940-3029
10140-3017
10640-3147
90176-9222
12040-3145
10101-4675
10140-3085
11040-3091
10940-3084
11941-3022
40740-0234 (2)
14941-0119
40440-0235
11541-0120
10440-0229 (4)
13640-3073
10140-0226 (2)
40340-0236 (2)
10702-2579
10740-3075
40502-1354
14241-3021
10202-2580
10502-2578

FOOTSTART AND FOOTCHANGE
KICK-START ET SELECTEUR AU PIED
KICKSTART UND FUSSSCHALTUNG
ARRANCADOR Y CAMBIO DE PIES

Spares No. No. de pièce Ersatzteil-Nr. No. de repuesto	Description	Designation	Beschreibung	Descripción	Per Set Par jeu Pr. Satz Juego de
1 45 41-3020	Lever complete	Levier complet	Hebel Kompl.	Palanca completa	
1 01 01-4675	Ball	Bille	Kugel	Bola	
4 05 02-1354	Bolt	Boulon	Schraube	Tornillo	
1 05 02-2578	Nut	Ecrou	Mutter	Tuerca	
1 07 02-2579	Cotter	Clavette, demi-lune	Nutenkeil	Chaveta ordinaria	
1 02 02-2580	Washer	Rondelle	Scheibe	Arandela	
4 01 35-0707	Split Pin	Goupille fendue	Splint	Chaveta hendida	
4 01 40-0028	Peg	Ergot	Stift	Esparago	2
1 18 40-0222	Bush	Douille	Büchse	Casquillo	
4 10 40-0224	Kickstart Stop	Butée de kick	Kickstarteranschlag	Dispositivo de tope	
1 07 40-0225	Screw	Vis	Schraube	Tornillo	
1 01 40-0226	Screw	Vis	Schraube	Tornillo	2
4 06 40-0228	Screw (long)	Vis (longue)	Schraube (Lang)	Tornillo (largo)	
1 04 40-0229	Screw (medium)	Vis (moyen)	Schraube (Mittel)	Tornillo (medio)	4
1 04 40-0230	Screw (short)	Vis (court)	Schraube (Kurz)	Tornillo (corto)	2
4 07 40-0234	Screw (long)	Vis (longue)	Schraube (Lang)	Tornillo (largo)	2
4 04 40-0235	Screw (medium)	Vis (moyen)	Schraube (Mittel)	Tornillo (medio)	2
4 03 40-0236	Screw (short)	Vis (court)	Schraube (Kurz)	Tornillo (corto)	2
1 01 40-0242	Screw	Vis	Schraube	Tornillo	2
1 45 40-0249	Inner Cover	Couvercle (intérieur)	Innere Schutzkappe	Tapa (int.)	
1 10 40-3028	Spring	Ressort	Feder	Resorte	
1 09 40-3029	Anchor Plate	Plaque d'ancrage	Ankerplatte	Soporte	
1 10 40-3041	Spindle	Arbre	Welle	Arbol	
1 06 40-3046	Cover	Couvercle	Schutzkappe	Tapa	
1 01 40-3047	Gasket	Joint	Dichtungen	Empaquetadura	
1 01 40-3071	Ball	Bille	Kugel	Bola	
1 36 40-3073	Lever	Levier	Hebel	Palanca	
1 07 40-3075	Rubber Pad	Tampon caoutchouc	Gummiauflange	Cojin de goma	
1 09 40-3084	Bolt	Boulon	Schraube	Tornillo	
1 01 40-3085	Spring	Ressort	Feder	Resorte	
1 10 40-3091	Rubber Pad	Tampon caoutchouc	Gummiauflage	Cojin de goma	
1 20 40-3145	Clutch Lever	Levier d'embrayage	Kupplungshebel	Palanca del embrague	
1 06 40-3147	Cup	Cuvette	Schale	Copa	
1 49 41-0119	Cover	Couvercle	Schutzkappe	Tapa	
1 15 41-0120	Badge	Ecusson	Firmenzeichen	Rótulo	
1 42 41-3021	Lever	Levier	Hebel	Palanca	
1 19 41-3022	Pedal	Pédale	Hebel	Pedal	
1 01 67-1244	Rivet	Rivet	Niete	Remache	
9 20 76-3017	Bush	Douille	Büchse	Casquillo	
9 01 76-9222	Washer	Rondelle	Scheibe	Arandela	

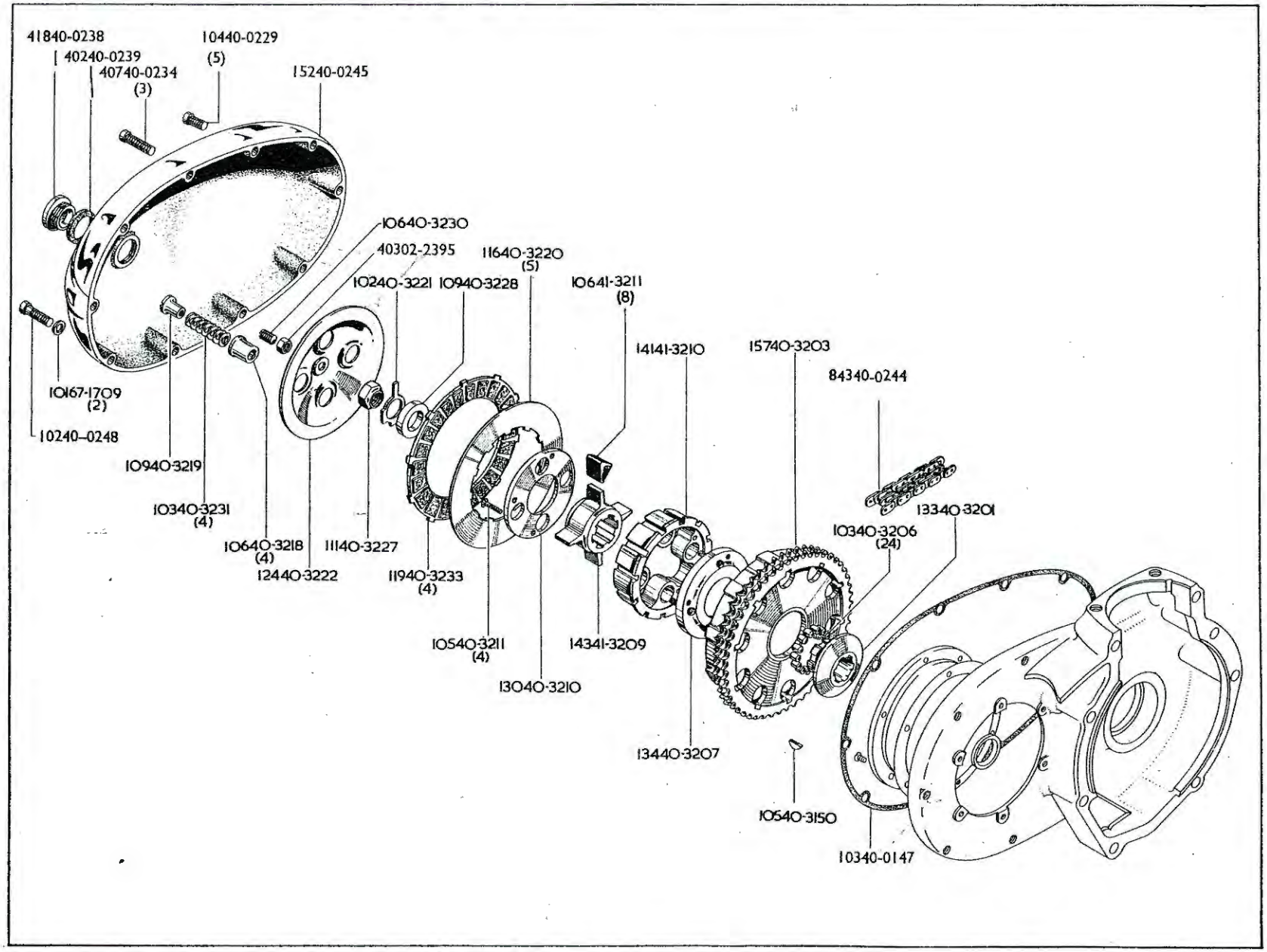
41840-0238
40240-0239
40740-0234
(3)
10440-0229
(5)
15240-0245
10640-3230
40302-2395
11640-3220
(5)
10240-3221
10940-3228
10641-3211
(8)
14141-3210
15740-3203
84340-0244
10167-1709
(2)
10240-0248
10940-3219
10340-3231
(4)
10640-3218
(4)
12440-3222
11140-3227
11940-3233
(4)
10540-3211
(4)
13040-3210
14341-3209
13340-3201
10340-3206
(24)
13440-3207
10540-3150
10340-0147

CLUTCH COMPLETE
EMBRAYAGE COMPLET
KUPPLUNG KOMPL
EMBRAGUE COMP

Spares No. No. de pièce Ersatzteil-Nr. No. de repuesto	Description	Designation	Beschreibung	Descripción	Per Set Par jeu Pr Satz Juego de
1 82 40-3200	Clutch complete	Embrayage complet	Kupplung Kompl.	Embrague completa	
4 03 02-2395	Nut	Écrou	Mutter	Tuerca	
1 04 40-0229	Screw (short)	Vis (court)	Schraube (Kurz)	Tornillo (corto)	5
4 07 40-0234	Screw (long)	Vis (longue)	Schraube (Lang)	Tornillo (largo)	3
4 18 40-0238	Cap	Chapeau	Abdeckkappe	Tapon	
4 02 40-0239	Sealing Washer	Joint d'étanchéité	Dichtung	Arandela de reten	
8 43 40-0244	Chain	Chaîne	Kette	Cadena	
1 52 40-0245	Cover	Couvercle	Schutzkappe	Tapa	
1 03 40-0247	Gasket	Joint	Dichtungen	Empaquetadura	
1 02 40-0248	Screw	Vis	Schraube	Tornillo	
1 05 40-3150	Woodruff Key	Clavette	Rundkeil	Chaveta Woodruff	
1 33 40-3201	Clutch Sleeve	Manchon de l'embrayage	Kupplungsmitnehmer	Mangueto de embrague	
1 57 40-3203	Clutch Chainwheel	Couronne d'embrayage	Kupplungskettenrad	Piñón de cadena del embrague	
1 03 40-3206	Roller	Rouleau	Rolle	Rodillo	24
1 34 40-3207	Retaining Plate complete (inner)	Plaque arrêtoir complet (int.)	Haltescheibe Innen, Kompl.	Placa retenedora (int.)	
1 30 40-3210	Retaining Plate (outer)	Plaque arrêtoir (ext.)	Haltescheibe (Aussen)	Placa retenedora (ext.)	
1 05 40-3211	Screw	Vis	Schraube	Tornillo	4
1 06 40-3218	Spring Cup	Siège de ressort	Federhülse	Copa	4
1 09 40-3219	Nut	Ecrou	Mutter	Tuerca	4
1 16 40-3220	Driven Plate	Disque entraîne	Reibscheibe	Disco accionado	5
1 02 40-3221	Lockwasher	Rondelle frein	Sicherungsscheibe	Freno	
1 24 40-3222	Clutch Pressure Plate	Disque extérieur d'embrayage	Aussere Kupplungsdruckplatte	Disco exterior del embrayage	
1 11 40-3227	Nut	Ecrou	Mutter	Tuerca	
1 09 40-3228	Washer	Rondelle	Scheibe	Arandela	
1 06 40-3230	Screw	Vis	Schraube	Tornillo	
1 03 40-3231	Spring	Ressort	Feder	Resorte	4
1 19 40-3233	Driving Plate	Disque entraînement	Mitnehmerplatte	Placa de manda	4
1 43 41-3209	Clutch Spider	Crosillon de l'embrayage	Kupplungskreuz	Estrella de embrague	
1 41 41-3210	Clutch Centre	Moyeux d'embrayage	Kupplungsnabe	Cubo de embrague	
1 06 41-3211	Rubber Buffer	Butée caoutchouc	Gummipuffer	Tope de goma	8
1 01 67-1709	Sealing Washer	Joint d'étanchéité	Dichtung	Arandela de reten	

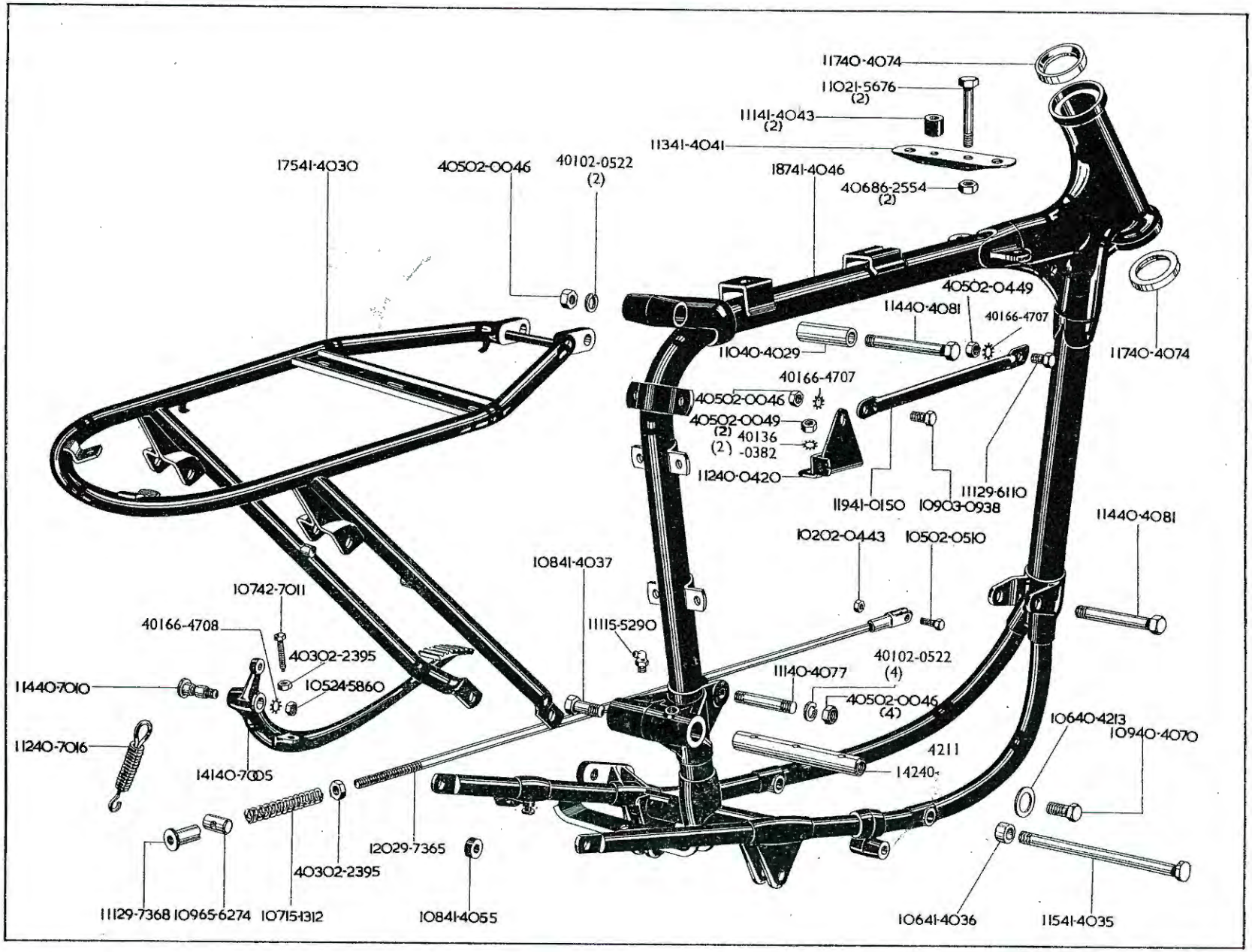
11740-4074
11021-5676
(2)
11141-4043
(2)
11341-4041
17541-4030
40502-0046
40102-0522
(2)
18741-4046
40686-2554
(2)
40502-0449
11440-4081
40166-4707
11040-4029
11740-4074
40166-4707
40502-0046
40502-0049
(2)
40136
(2) -0382
11240-0420
11941-0150
10903-0938
11129-6110
11440-4081
10202-0443
10502-0510
10841-4037
10742-7011
40166-4708
11115-5290
40302-2395
40102-0522
(4)
11140-4077
10524-5860
11440-7010
40502-0046
(4)
10640-4213
10940-4070
11240-7016
4211
14140-7005
14240-
12029-7365
40302-2395
11129-7368
10965-6274
10715-1312
10841-4055
10641-4036
11541-4035

FRAME
CADRE
RAHMEN
CUADRO

BRAKE PEDAL
PEDALE DE FREIN
FUSSBREMSHEBEL
PEDAL DE FRENO

Spares No. No. de pièce Ersatzteil-Nr. No. de repuesto	Description	Designation	Beschreibung	Descripción	Per Set Par jeu Pr. Satz Juego de
1 93 41-4044	Frame complete	Cadre complet	Rahmen Kompl.	Cuadro completa	
4 05 02-0046	Nut	Ecrou	Mutter	Tuerca	6
4 05 02-0049	Nut	Ecrou	Mutter	Tuerca	2
1 02 02-0443	Nut	Ecrou	Mutter	Tuerca	
4 05 02-0449	Nut	Ecrou	Mutter	Tuerca	
1 05 02-0510	Screw	Vis	Schraube	Tornillo	
4 01 02-0522	Lockwasher	Rondelle frein	Sicherungsscheibe	Freno	6
4 03 02-2395	Nut	Ecrou	Mutter	Tuerca	2
1 09 03-0938	Bolt	Boulon	Schraube	Tornillo	
1 07 15-1312	Spring	Ressort	Feder	Resorte	
1 11 15-5290	Grease Nipple	Graisseur	Schmiernippel	Engrasador	
1 10 21-5676	Bolt	Boulon	Schraube	Tornillo	2
1 05 24-5860	Nut	Ecrou	Mutter	Tuerca	
1 11 29-6110	Bolt	Boulon	Schraube	Tornillo	
1 20 29-7365	Brake Rod	Tringle de frein	Bremsstange	Tirante de freno	
1 11 29-7368	Nut	Ecrou	Mutter	Tuerca	
4 01 36-0382	Lockwasher	Rondelle frein	Sicherungsscheibe	Freno	2
1 12 40-0420	Brakcet	Support	Verstrebung	Soporte	
1 10 40-4029	Spacer Tube	Tube entretoise	Distanzrohr	Tubo espaciador	
1 09 40-4070	Bolt (o/s)	Boulon (droite)	Schraube (Rechts)	Tornillo (der.)	
1 17 40-4074	Bearing Cup	Cuvette de roulement	Lagerschale	Copa de rolameinto	2
1 11 40-4077	Stud	Goujon	Stehbolzen	Esparago	
1 14 40-4081	Bolt	Boulon	Schraube	Tornillo	2
1 42 40-4211	Spindle	Arbre	Welle	Arbol	
1 06 40-4213	Washer (o/s)	Rondelle (droite)	Scheibe (Rechts)	Arandela (der.)	
1 41 40-7005	Brake Pedal	Pédale de frein	Fussbremshebel	Pedal de freno	
1 14 40-7010	Pivot Pin	Axe	Bolzen	Eje	
1 12 40-7016	Spring	Ressort	Feder	Resorte	
1 19 41-0150	Stay	Tringle	Strebe	Tirante	
1 75 41-4030	Rear Sub Frame	Cadre ar	Hinterrahmen	Cuadro trasera	
1 15 41-4035	Bolt	Boulon	Schraube	Tornillo	
1 06 41-4036	Spacer Bush	Bague entretoise	Distanzbüchse	Anillo espaciador	
1 08 41-4037	Bolt (n/s)	Boulon (gauche)	Schraube (Links)	Tornillo (izq.)	
1 13 41-4041	Bracket	Support	Verstrebung	Soporte	
1 11 41-4043	Distance Piece	Entretoise	Distanzrohr	Distanciador	2
1 87 41-4046	Frame Front	Cadre av	Vorderrahmen	Cuadro delantera	
1 08 41-4055	Spacer Bush	Bague entretoise	Distanzbüchse	Anillo espaciador	
1 07 42-7011	Screw	Vis	Schraube	Tornillo	
1 09 65-6274	Swivel Pin	Tourillon simple	Stift	Esparago	
4 01 66-4707	Lockwasher	Rondelle frein	Sicherungsscheibe	Freno	2
1 01 66-4708	Lockwasher	Rondelle frein	Sicherungsscheibe	Freno	
4 06 86-2554	Nut	Ecrou	Mutter	Tuerca	2

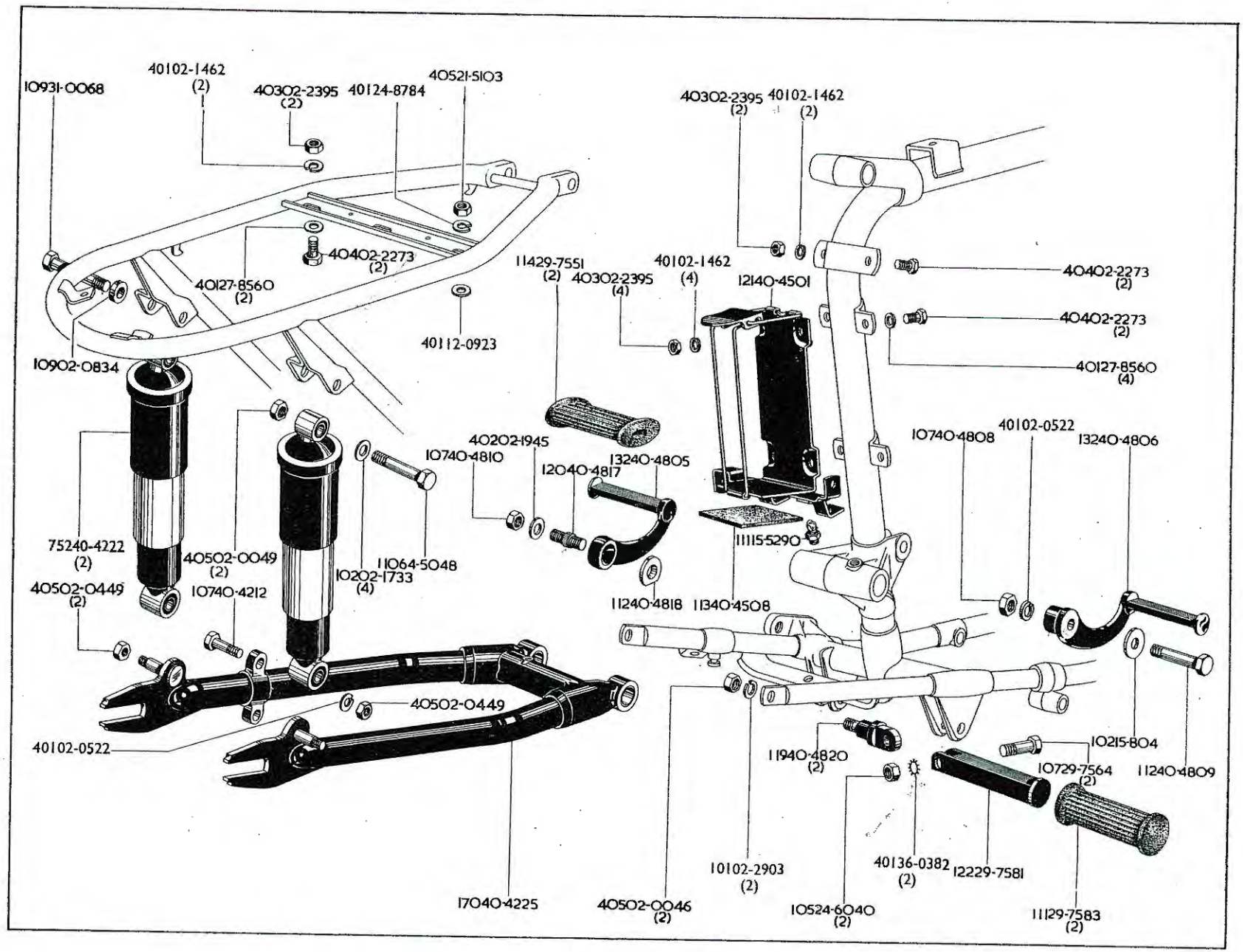
10931-0068
40102-1462 (2)
40302-2395 (2)
40124-8784
40521-5103
40402-2273 (2)
40127-8560 (2)
40112-0923
10902-0834
11429-7551 (2)
40302-2395 (4)
40102-1462 (4)
12140-4501
40302-2395 (2)
40102-1462 (2)
40402-2273 (2)
40402-2273 (2)
40127-8560 (4)
40202-1945
10740-4810
12040-4817
13240-4805
10740-4808
40102-0522
13240-4806
11115-5290
75240-4222 (2)
40502-0049 (2)
11064-5048
10202-1733 (4)
40502-0449 (2)
10740-4212
11240-4818
11340-4508
40502-0449
40102-0522
11940-4820 (2)
10215-804
10729-7564 (2)
11240-4809
10102-2903 (2)
40136-0382 (2)
12229-7581
17040-4225
40502-0046 (2)
10524-6040 (2)
11129-7583 (2)

SWINGING ARM
BRAS OSCILLANT
SCHWINGARM
HORQUILLA OSCILLANTE

FOOTRESTS
REPOSE-PIED
FUSSRASTE
DESCANSA-PIE

BATTERY HOLDER
SUPPORT DE BATTERIE
BATTERIE HALTER
PORTA-BATERIA

Spares No. No. de pièce Ersatzteil-Nr. No. de repuesto	Description	Designation	Beschreibung	Descripción	Per Set Par jeu Pr. Satz Juego de
1 21 40–4501	Battery Holder complete	Support de batterie complet	Batteriehalter Kompl.	Porta-batteria completa	
1 31 40–4822	Pillion Footrest complete	Repose-pied arrière complet	Soziusfussraste Kompl.	Descansa-pie para asiento trasera completa.	
4 05 02–0046	Nut	Ecrou	Mutter	Tuerca	2
4 05 02–0449	Nut	Ecrou	Mutter	Tuerca	5
4 01 02–0522	Lockwasher	Rondelle frein	Sicherungsscheibe	Freno	2
1 09 02–0834	Distance Piece	Entretoise	Distanzrohr	Distanciador	
4 01 02–0923	Washer	Rondelle	Scheibe	Arandela	
4 01 02–1462	Lockwasher	Rondelle frein	Sicherungsscheibe	Freno	8
1 02 02–1733	Washer	Rondelle	Scheibe	Arandela	4
4 02 02–1945	Washer	Rondelle	Scheibe	Arandela	
4 04 02–2273	Bolt	Boulon	Schraube	Tornillo	6
4 03 02–2395	Nut	Ecrou	Mutter	Tuerca	8
1 01 02–2903	Lockwasher	Rondelle frein	Sicherungsscheibe	Freno	2
1 02 15–0804	Washer	Rondelle	Scheibe	Arandela	
1 11 15–5290	Grease Nipple	Graisseur	Schmiernippel	Engrasador	
4 05 21–5103	Nut	Ecrou	Mutter	Tuerca	
1 05 24–6040	Nut	Ecrou	Mutter	Tuerca	2
4 01 24–8784	Lockwasher	Rondelle frein	Sicherungsscheibe	Freno	
4 01 27–8560	Washer	Rondelle	Scheibe	Arandela	6
1 14 29–7551	Rubber Pad	Tampon caoutchouc	Gummiauflage	Cojin de goma	2
1 07 29–7564	Bolt	Boulon	Schraube	Tornillo	2
1 22 29–7581	Pillion Footrest	Repose-pied arrière	Soziusfussraste	Descansa-pie para asiento trasera	2
1 11 29–7583	Rubber Pad	Tampon caoutchouc	Gummiauflage	Cojin de goma	2
1 09 31–0068	Bolt (n/s)	Boulon (gauche)	Schraube (Links)	Tornillo (izq.)	
4 01 36–0382	Lockwasher	Rondelle frein	Sicherungsscheibe	Freno	2
1 07 40–4212	Bolt	Boulon	Schraube	Tornillo	
7 52 40–4222	Shock Absorber	Amortisseur	Stossdämpfer	Amortiguador	2
1 70 40–4225	Swinging Arm	Bras oscillant	Schwingarm	Horquilla oscillante	
1 13 40–4508	Rubber Mat	Recouvrement caoutchouc	Gummibelag	Estera de goma	
1 32 40–4805	Footrest (n/s)	Repose-pied (gauche)	Fussraste (Links)	Descansa-pie (izq.)	
1 32 40–4806	Footrest (o/s)	Repose-pied (droite)	Fussraste (Rechts)	Descansa-pie (der.)	
1 07 40–4808	Nut	Ecrou	Mutter	Tuerca	
1 12 40–4809	Bolt	Boulon	Schraube	Tornillo	
1 07 40–4810	Nut	Ecrou	Mutter	Tuerca	
1 20 40 4817	Stud	Goujon	Stehbolzen	Esparago	
1 12 40–4818	Locking Plate	Plaque de blocage	Sicherungsscheibe	Placa cerradora	
1 19 40–4820	Bolt	Boulon	Schraube	Tornillo	2
1 10 64–5048	Bolt (o/s)	Boulon (droite)	Schraube (Rechts)	Tornillo (der.)	

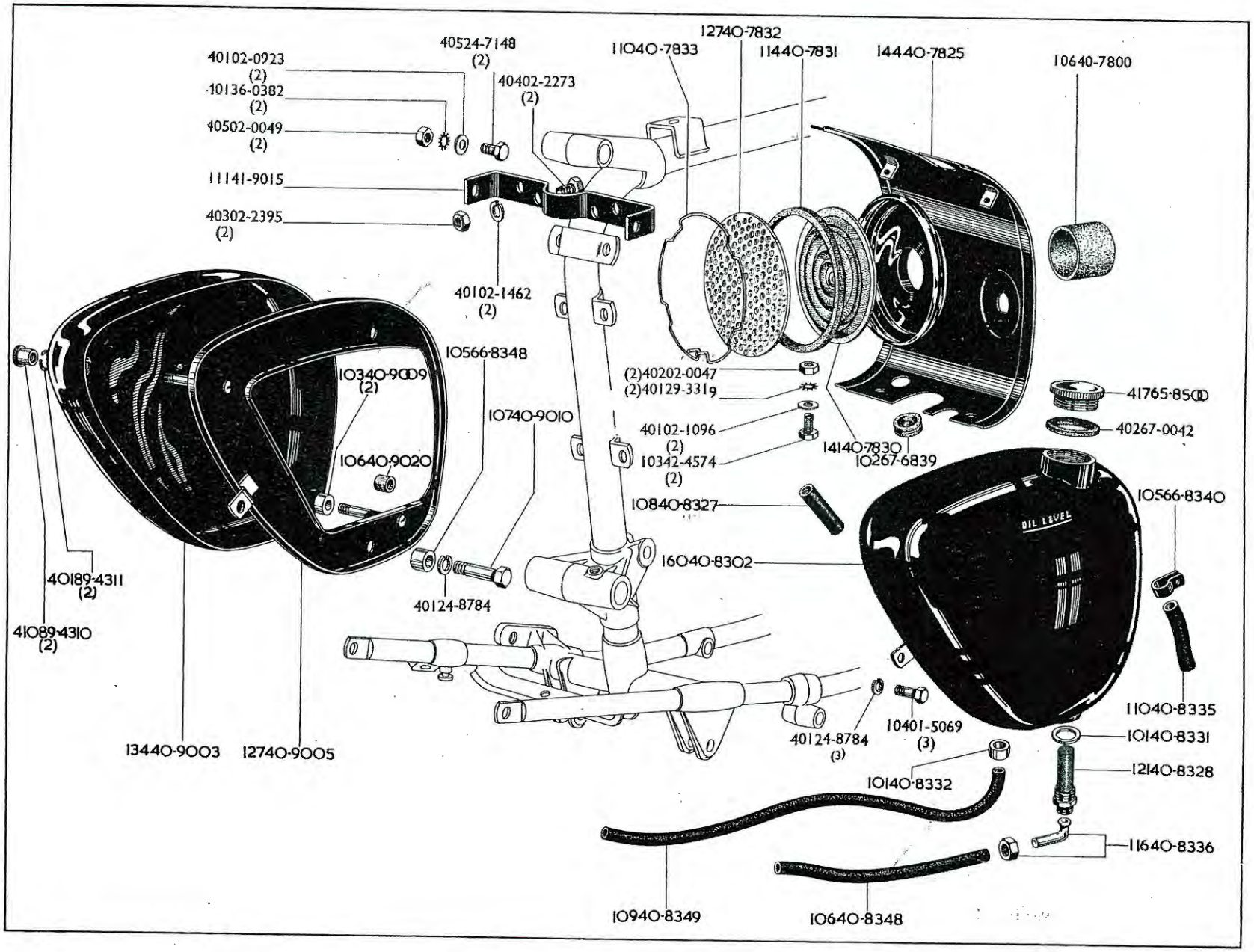
40102-0923
(2)
40524-7148
(2)
40402-2273
(2)
10136-0382
(2)
40502-0049
(2)
11141-9015
40302-2395
(2)
40102-1462
(2)
11040-7833
12740-7832
11440-7831
14440-7825
10640-7800
10566-8348
10340-9009
(2)
10740-9010
10640-9020
(2)40202-0047
(2)40129-3319
40102-1096
(2)
10342-4574
(2)
14140-7830
10267-6839
41765-8500
40267-0042
10840-8327
16040-8302
OIL LEVEL
10566-8340
40189-4311
(2)
41089-4310
(2)
40124-8784
13440-9003
12740-9005
40124-8784
(3)
10401-5069
(3)
11040-8335
10140-8331
12140-8328
10140-8332
11640-8336
10940-8349
10640-8348

TOOLBOX
BOÎTE À OUTILS
WERKZEUGKASTEN
CAJA DE HERRAMIENTOS

OIL TANK
RESEVOIR D'HUILE
ÖLTANK
DEPOSITO DE ACEITE

COVER PLATE
PLAQUE COUVERCLE
ABDECKPLATTE
TAPA DEL COJINETE

Spares No. No. de pièce Ersatzteil-Nr. No. de repuesto	Description	Designation	Beschreibung	Descripción	Per Set Par jeu Pr. Satz Juego de
1 04 01-5069	Bolt	Boulon	Schraube	Tornillo	3
4 02 02-0047	Nut	Ecrou	Mutter	Tuerca	2
4 05 02-0049	Nut	Ecrou	Mutter	Tuerca	2
4 01 02-0923	Washer	Rondelle	Scheibe	Arandela	2
4 01 02-1096	Washer	Rondelle	Scheibe	Arandela	2
4 01 02-1462	Lockwasher	Rondelle frein	Sicherungsscheibe	Freno	2
4 04 02-2273	Bolt	Boulon	Schraube	Tornillo	2
4 03 02-2395	Nut	Ecrou	Mutter	Tuerca	2
4 05 24-7148	Bolt	Boulon	Schraube	Tornillo	2
4 01 24-8784	Lockwasher	Rondelle frein	Sicherungsscheibe	Freno	4
4 01 29-3319	Lockwasher	Rondelle frein	Sicherungsscheibe	Freno	2
4 01 36-0382	Lockwasher	Rondelle frein	Sicherungsscheibe	Freno	2
1 06 40-7800	Rubber Sleeve	Douille caoutchouc	Gummimuffe	Manguita de goma	
1 41 40-7830	Air Filter Element	Element de filtre à air	Luftfilter	Guarnición del filtro	
1 14 40-7831	Rubber Ring	Bague caoutchouc	Gummiring	Anillo de goma	
1 27 40-7832	Filter Gauze	Gaze du filtre	Filtergaze	Gasa de filtro	
1 10 40-7833	Circlip	Circlip	Sprengring	Freno	
1 44 40-7825	Cover Plate	Plaque couvercle	Schutzkappe	Tapa	
1 60 40-8302	Oil Tank	Résevoir d'huile	Öltank	Desposito de aceite	
1 08 40-8327	Rubber Sleeve	Douille caoutchouc	Gummimuffe	Manguita de goma	
1 21 40-8328	Oil Tank Filter	Filtre du résevoir à huile	Öltankfilter	Filtro del depósito de aceite	
1 01 40-8331	Sealing Washer	Joint d'étanchéité	Dichtung	Arandela de reten	
1 01 40-8332	Ferrule	Virole	Huelse	Virola	
1 10 40-8335	Oil Pipe	Conduit ou canalisation d'huile	Ölleitung	Conección de engrase	
1 16 40-8336	Oil Feed Union complete	Raccord d'alimentation d'huile	Ölzufuhrverbinodung	Union de la tuberia de alimentación de aceite.	
1 06 40-8348	Oil Pipe	Conduit ou canalisation d'huile	Ölleitung	Conección de engrase	
1 09 40-8349	Oil Return Pipe	Tuyauterie de retour d'huile	Ölrucklaufleitung	Tubo de retorna de aceite	
1 34 40-9003	Tool Box Cover	Couvercle de la boîte à outils	Werkzeugkastendeckel	Tapa de la caja de herramientos	
1 27 40-9005	Back Plate	Plaque arrière	Hintere Platte	Placa trasera	
1 03 40-9009	Spacer Bush	Bague entretoise	Distanzbüchse	Anillo espaciador	2
1 07 40-9010	Bolt	Boulon	Schraube	Tornillo	
1 06 40-9020	Rubber Sleeve	Douille caoutchouc	Gummimuffe	Manguita de goma	2
1 11 41-9015	Bracket	Support	Verstrebung	Soporte	
1 03 42-4574	Bolt	Boulon	Schraube	Tornillo	2
4 17 65-8500	Filler Cap	Bouchon de remplissage	Verschlusskappe	Tapa	
1 05 66-8340	Clip	Bride	Klammer	Grapa	
1 05 66-8348	Spacer Bush	Bague entretoise	Distanzbüchse	Anillo espaciador	
4 02 67-0042	Sealing Washer	Joint d'étanchéité	Dichtung	Arandela de reten	
1 02 67-6839	Rubber Grommet	Virole caoutchouc	Gummitülle	Manguera de goma	
4 10 89-4310	Nut	Ecrou	Mutter	Tuerca	2
4 01 89-4311	Circlip	Circlip	Sprengring	Freno	2

13942-6887
10967-6851
12540-6506
15141-6502
15141-6501
10640-6517
40402-0220
11042-5125
40302-2395 (4)
40102-1462 (2)
40302-2395 (2)
40102-1462 (4)
40402-0204 (4)
40127-8560 (4)
40129-0541
10202-0443
10267-6839 (2)
40502-0049 (2)
40302-2395 (2)
40124-8784 (2)
40102-1462 (2)
11440-6505 (2)
40124-8784 (4)
11741-6503 (2)
40524-0563 (4)
40124-8784 (2)
40467-8313 (2)
11340-4040
40127-8560 (2)
40402-0204 (2)
10135-0033
10515-7354 (2)
40524-5160
14441-7701
15741-6751
40402-0204 (4)
40402-0204
40102-1462 (4)
40402-0204
40102-1462
40127-8560 (4)
40102-0525
40102-1462
40302-2395
40124-8784
11040-4715
10841-7702
40524-7148
11167-6760
40102-0522
40402-0204
11040-4733
40102-1462
10135-0710 (2)
13840-4729
10340-4734
11540-4716
40215-0431 (2)
10940-4735
14741-4703
10640-4714 (2)

MUDGUARDS
GUARDEBOUE
SCHUTZBLECH
GUARDABARROS

CHAINGUARD
CARTER DE CHAÎNE
KETTENSCHUTZ
GUARDACADENA

Spares No. / No. de pièce / Ersatzteil-Nr. / No. de repuesto	Description	Designation	Beschreibung	Descripción	Per Set / Par jeu / Pr. Satz / Juego de
4 05 02–0049	Nut	Ecrou	Mutter	Tuerca	2
4 04 02–0204	Bolt	Boulon	Schraube	Tornillo	13
4 04 02–0220	Bolt	Boulon	Schraube	Tornillo	
1 02 02–0443	Nut	Ecrou	Mutter	Tuerca	
4 01 02–0522	Lockwasher	Rondelle frein	Sicherungsscheibe	Freno	
4 01 02–0525	Washer	Rondelle	Scheibe	Arandela	
4 01 02–1462	Lockwasher	Rondelle frein	Sicherungsscheibe	Freno	15
4 03 02–2395	Nut	Ecrou	Mutter	Tuerca	9
4 02 15–0431	Washer	Rondelle	Scheibe	Arandela	2
1 05 15–7354	Bolt	Boulon	Schraube	Tornillo	2
4 05 24–0563	Nut	Ecrou	Mutter	Tuerca	4
4 05 24–5160	Nut	Ecrou	Mutter	Tuerca	
4 05 24–7148	Bolt	Boulon	Schraube	Tornillo	
4 01 24–8784	Lockwasher	Rondelle frein	Sicherungsscheibe	Freno	9
4 01 27–8560	Washer	Rondelle	Scheibe	Arandela	10
4 01 29–0541	Lockwasher	Rondelle frein	Sicherungsscheibe	Freno	
4 01 35–0033	Washer	Rondelle	Scheibe	Arandela	
1 01 35–0710	Split Pin	Goupille fendue	Splint	Chaveta hendida	
1 13 40–4040	Spring Anchor Plate	Plaque d'ancrage de ressort	Ankerplatte für Feder	Sujeción	
1 06 40–4714	Pivot Pin	Axe	Drehzapfen	Eje	2
1 10 40–4715	Bolt	Boulon	Schraube	Tornillo	
1 15 40–4716	Spring	Ressort	Feder	Resorte	
1 38 40–4729	Prop Stand	Béquille latérale	Seitenstütze	Muleta lateral	
1 10 40–4733	Pivot Pin	Axe	Drehzapfen	Eje	
1 03 40–4734	Lockwasher	Rondelle frein	Sicherungsscheibe	Freno	
1 09 40–4735	Spring	Ressort	Feder	Resorte	
1 14 40–6505	Bracket	Support	Verstrebung	Soporte	2
1 25 40–6506	Number Plate	Plaque de police	Nummernschild	Chapa de patente	
1 06 40–6517	Bracket	Support	Verstrebung	Soporte	
1 47 41–4703	Centre Stand	Béquille centrale	Mittelständer	Muleta	
1 51 41–6501	Front Guard	Guard-boue de roue av	Vorderradschutzblech	Guardabarro del.	
1 51 41–6502	*Front Guard	Guard-Boue de Roue Ar	Hinterradschutzblech	Guardacarro Tras	
1 17 41–6503	Stay	Tringle	Strebe	Tirante	2
1 57 41–6751	Rear Guard	Guard-boue de roue ar	Hinterradschutzblech	Guardabarro tras.	
1 44 41–7701	Chain Guard	Carter de chaîne	Kettenschutz	Guardacadena	
1 08 41–7702	Bracket	Support	Verstrebung	Soporte	
1 10 42–5125	Retainer	Arrêtoir	Sicherung	Freno	
1 39 42–6887	Number Plate	Plaque de police	Nummernschild	Chapa de patente	
1 11 67–6760	Bolt	Boulon	Schraube	Tornillo	
1 02 67–6839	Grommet	Rondelle capuchon	Tülle	Manguera	2
1 09 67–6851	Rubber Moulding	Caoutchouc moulé	Profilgummi	Profil de goma	
4 04 67–8313	Bolt	Boulon	Schraube	Tornillo	2

*American Type — *Type American — *Amerikanische Typen — *Tipo Americano

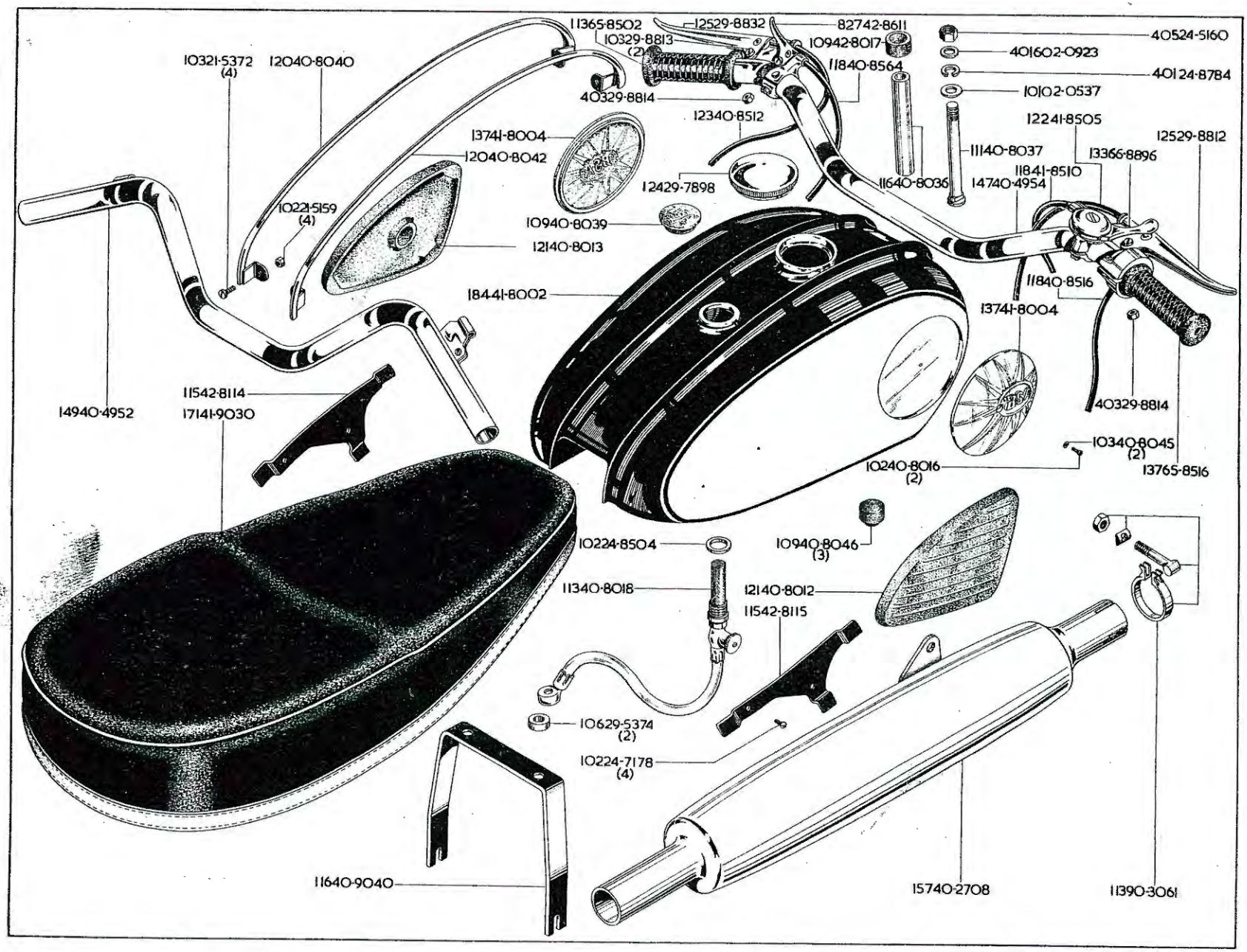
11365-8502
12529-8832
82742-8611
40524-5160
10329-8813
(2)
10942-8017
401602-0923
10321-5372
(4)
12040-8040
11840-8564
40124-8784
10102-0537
40329-8814
12340-8512
12241-8505
12529-8812
13741-8004
12040-8042
11140-8037
13366-8896
11841-8510
12429-7898
11640-8036
14740-4954
10221-5159
(4)
10940-8039
12140-8013
11840-8516
18441-8002
13741-8004
11542-8114
14940-4952
17141-9030
40329-8814
10340-8045
(2)
10240-8016
(2)
13765-8516
10940-8046
(3)
10224-8504
11340-8018
12140-8012
11542-8115
10629-5374
(2)
10224-7178
(4)
11640-9040
15740-2708
11390-3061

PETROL TANK
RESEVOIR D'ESSENCE
BENZINTANK
DEPOSITO DE COMBUSTIBLE

DUAL SEAT
SELLE DOUBLE
DOPPELSITZ
ASIENTO DOBLE

HANDLEBAR
GUIDON
LENKER
MANILLAR

Spares No. / No. de pièce / Ersatzteil-Nr. / No. de repuesto	Description	Designation	Beschreibung	Descripción	Per Set / Par jeu / Pr. Satz / Juego de
1 23 40–8512	Clutch Cable complete	Cable de commande de l'embrayage complet	Kupplungskabel Kompl.	Cable Bowden para embrague completa	
1 18 40–8516	Throttle Cable complete	Commande des gaz complet	Gaszug Kompl.	Cable Bowden para acelerado completa	
1 18 40–8564	Exhaust Cable complete	Cable pour decompresseur complet	Seilzug für Auspuff-Ventilhebel kompl	Cable para des compresor completa	
1 22 41–8505	Front Brake Cable complete	Cable de commande du frein avant complet	Vorderradbremskabel kompl	Cable Bowden para freno delantera completa	
1 37 65–8516	Throttle Twist Grip complete	Poignée tournante de commande des gaz. complet	Gasdrehgriff kompl	Puño girante de acelerador completa	
1 01 02–0537	Washer	Rondelle	Scheibe	Arandela	
4 01 02–0923	Washer	Rondelle	Scheibe	Arandela	
1 02 21–5159	Nut	Ecrou	Mutter	Tuerca	4
1 03 21–5372	Screw	Vis	Schraube	Tornillo	4
4 05 24–5160	Nut	Ecrou	Mutter	Tuerca	
1 02 24–7178	Screw	Vis	Schraube	Tornillo	4
1 02 24–8504	Sealing Ring	Bague étanchéité	Dichtring	Junta	
4 01 24–8784	Lockwasher	Rondelle frein	Sicherungsscheibe	Freno	
1 06 29–5374	Distance Piece	Entretoise	Distanzrohr	Distanciador	2
1 24 29–7898	Filler Cap	Bouchon de remplissage	Verschlusskappe	Tapa	
1 25 29–8812	Brake Lever	Levier de came de frein	Bremsnockenhebel	Palanca de freno	
4 03 29–8813	Screw	Vis	Schraube	Tornillo	2
4 03 29–8814	Nut	Ecrou	Mutter	Tuerca	2
1 25 29–8832	Clutch Lever	Levier d'embrayage	Kupplungshebel	Palanca del embrague	
1 57 40–2708	Silencer	Silencieux	Schalldämpfer	Silenciador	
1 49 40–4952	Handlebar (Western)	Guidon (type American)	Lenker (Amerikanischen Typs)	Manillar (tipo Americano)	
1 47 40–4954	Handlebar	Guidon	Lenker	Manillar	
1 21 40–8012	Rubber Pad (o/s)	Tampon caoutchouc (droite)	Gummiauflage (Rechts)	Cojin de goma (der.)	2
1 21 40–8013	Rubber Pad (n/s)	Tampon caoutchouc (gauche)	Gummiauflage (Links)	Cojin de goma (izq.)	
1 02 40–8016	Screw	Vis	Schraube	Tornillo	2
1 33 40–8018	Petrol Pipe and Tap	Tuyau à essence avec robinet	Benzinschlauch mit Hahn	Cañade benzina con grifo	
1 16 40–8036	Distance Piece	Entretoise	Distanzrohr	Distanciador	
1 09 40–8039	Grommet	Virole	Gummitülle	Manguera de goma	
1 11 40–8037	Bolt	Boulon	Schraube	Tornillo	
1 20 40–8040	Beading (n/s)	Moulure (gauche)	Zierleiste (Links)	Moldura (izq.)	
1 20 40–8042	Beading (o/s)	Moulure (droite)	Zierleiste (Rechts)	Moldura (der.)	
1 03 40–8045	Washer	Rondelle	Scheibe	Arandela	2
1 09 40–8046	Rubber Buffer	Butée caoutchouc	Gummipuffer	Tope de goma	3
1 16 40–9040	Bracket	Support	Verstrebung	Soporte	
1 83 41–8002	Petrol Tank	Résevoir d'essence	Benzintank	Deposito de combustible	
1 37 41–8004	Name Plate	Ecusson	Typenzeichen	Placa	2
1 18 41–8510	Air Control Cable	Cable Pour la Manette D'air	Seilzug Fur Luft	Cable Para la Manecilla de Aire	
1 71 41–9030	Dual Seat	Selle double	Doppelsitz	Asiento doble	
1 09 42–8017	Rubber Sleeve	Douille caoutchouc	Gummimuffe	Manguita de goma	
1 15 42–8114	Bracket (n/s)	Support (gauche)	Verstrebung (Links)	Soporte (izq.)	
1 15 42–8115	Bracket (o/s)	Support (droite)	Verstrebung (Rechts)	Soporte (der.)	
8 27 42–8611	Exhaust Lever	Manette de d'decompresseur	Auspuff-Ventilhebel	Manecilla del compresor	
1 13 65–8502	Rubber Grip (left-hand)	Poignee en caoutchouc (gauche)	Gummigriff (Links)	Puño fijo de goma (izq.)	
1 33 66–8896	Air Control Lever	Levier Pour la Manette D'air	Luftheqel	Palanca Para la Manicilla de Aire	
1 13 90–3061	Clip complete	Bride complet	Klammer Kompl.	Grapa completa	

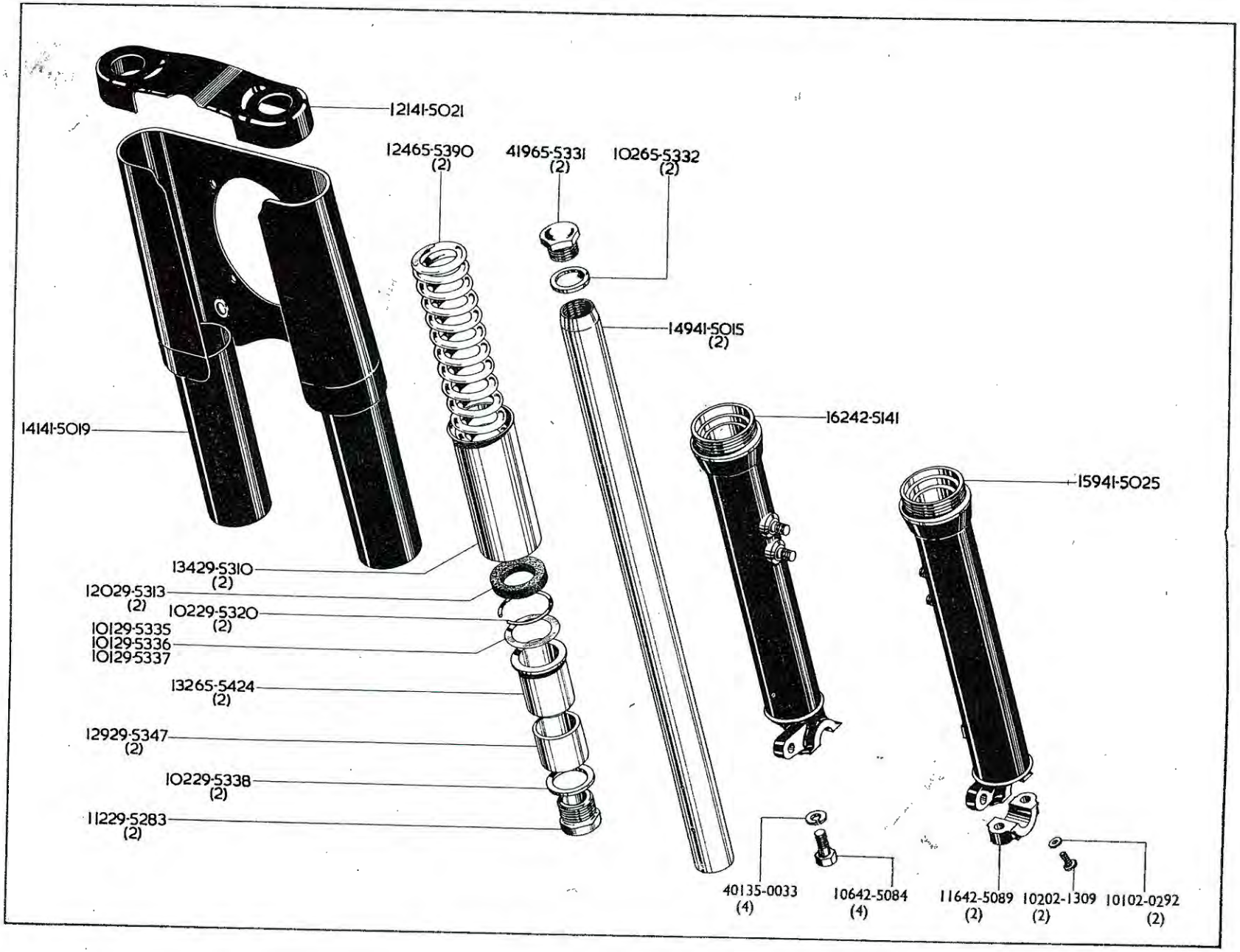
12141-5021
12465-5390 (2)
41965-5331 (2)
10265-5332 (2)
14941-5015 (2)
16242-5141
15941-5025
14141-5019
13429-5310 (2)
12029-5313 (2)
10229-5320 (2)
10129-5335
10129-5336
10129-5337
13265-5424 (2)
12929-5347 (2)
10229-5338 (2)
11229-5283 (2)
40135-0033 (4)
10642-5084 (4)
11642-5089 (2)
10202-1309 (2)
10102-0292 (2)

FRONT FORK
FOURCHE AV
VORDERGABEL
HORQUILLA DEL

Spares No. No. de pièce Ersatzteil-Nr. Nb. de repuesto	Description	Designation	Beschreibung	Descripción	Per Set Par jeu Pr. Satz Juego de
1 8941–5000	Front Fork complete	Fourch av complet	Vordergabel Kompl	Horquilla del completa	
1 01 02–0292	Sealing Washer	Joint d'étanchéité	Dichtung	Arandela de reten	2
1 02 02–1309	Plug	Bouchon	Stopfen	Tapon	
1 12 29–5283	Plug	Bouchon	Stopfen	Tapon	
1 34 29–5310	Oil Seal Housing	Boiter de joint d'huile	Dichtringgehäuse	Caja reten de aceite	2
1 20 29–5313	Oil Seal	Joint d'huile	Simmerring	Reten de aceite	2
1 02 29–5320	Circlip	Arrêtoir	Sprengring	Freno	2
1 01 29–5335	Shim (.010 in.)	Rondelle d'epaisseur (.254 mm.)	Ausgleichsscheibe (.254 mm.)	Espesor (.254 mm.)	
1 01 29–5336	Shim (.020 in.)	Rondelle d'epaisseur (.508 mm.)	Ausgleichsscheibe (.508 mm.)	Espesor (.508 mm.)	
1 01 29–5337	Shim (.030 in.)	Rondelle d'epassieur (.762 mm.)	Ausgleichsscheibe (.762 mm.)	Espesor (.762 mm.)	
1 02 29–5338	Washer	Rondelle	Scheibe	Arandela	2
1 29 29–5347	Bearing	Roulement	Lager	Rolamiento	2
4 01 35–0033	Lockwasher	Rondelle frein	Sicherungsscheibe	Freno	4
1 49 41–5015	Shaft	Arbre	Welle	Arból	2
1 41 41–5019	Cover	Couvercle	Schutzkappe	Tapa	
1 21 41–5021	Top Cover	Couvercle supérieur	Schutzkappe Oben	Tapa superior	
1 59 41–5025	Sliding Tube (o/s)	Tube coulissant (droite)	Gleitrohr (Rechts)	Tubo deslizando (der.)	
1 06 42–5084	Bolt	Boulon	Schraube	Tornillo	4
1 16 42–5089	Cap	Chapeau	Abdeckkappe	Tapon	2
1 62 42–5141	Sliding Tube (n/s)	Tube coulissant (gauche)	Gleitrohr (Links)	Tubo deslizando (izq.)	
4 19 65–5331	Top Nut	Ecrou supérieur	Obere Mutter	Tuerca superior	2
1 02 65–5332	Washer	Rondelle	Scheibe	Arandela	
1 24 65–5390	Spring	Ressort	Feder	Resorte	2
1 32 65–5424	Bearing	Roulement	Lager	Rolamiento	2

14

15

16

17

18

19

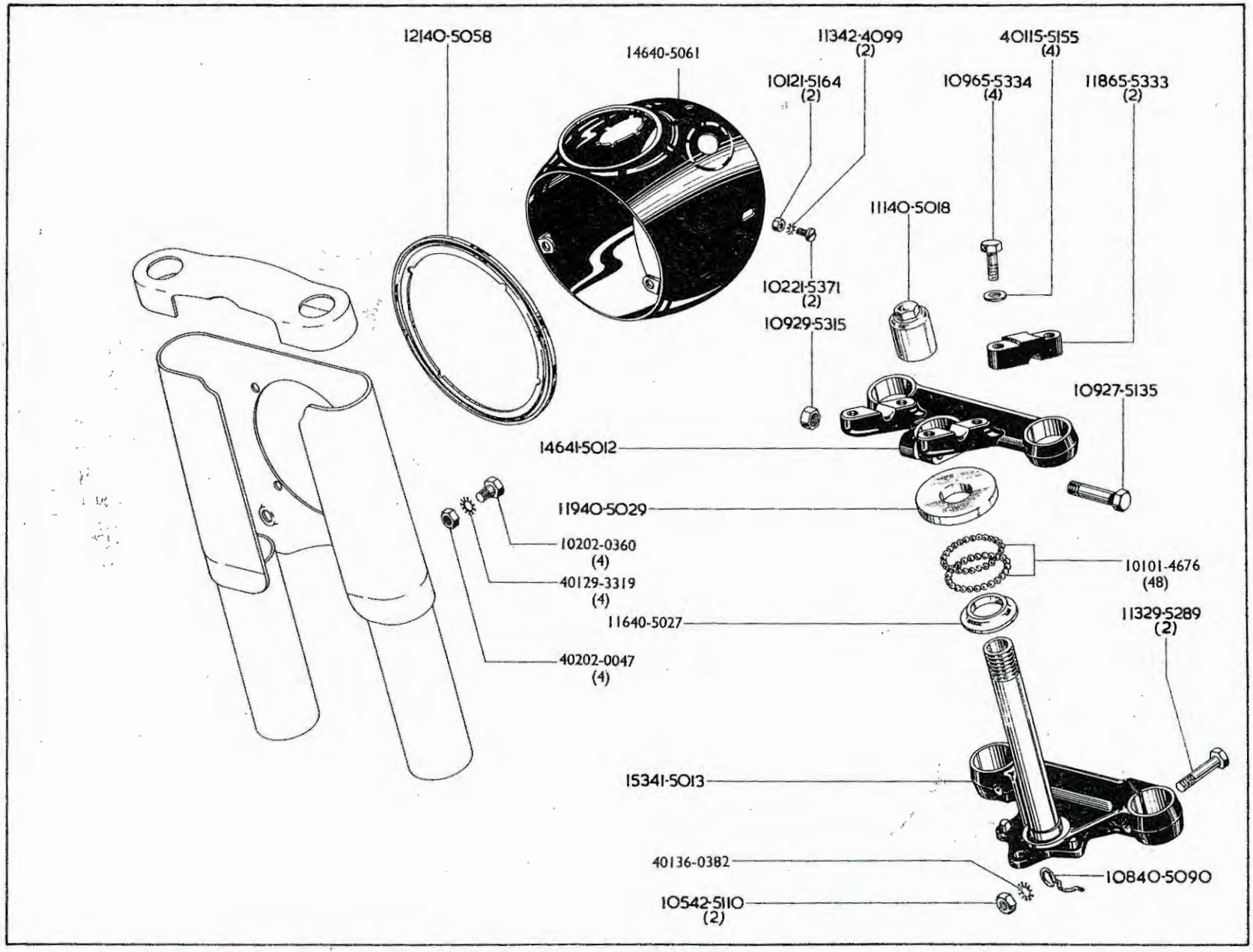
12140-5058
14640-5061
11342-4099
(2)
40115-5155
(4)
10121-5164
(2)
10965-5334
(4)
11865-5333
(2)
11140-5018
10221-5371
(2)
10929-5315
10927-5135
14641-5012
11940-5029
10202-0360
(4)
40129-3319
(4)
10101-4676
(48)
11640-5027
11329-5289
(2)
40202-0047
(4)
15341-5013
40136-0382
10840-5090
10542-5110
(2)

FRONT FORK
FOURCHE AV
VORDERGABEL
HORQUILLA DEL

Spares No. No. de pièce Ersatzteil-Nr. No. de repuesto	Description	Designation	Beschreibung	Descripción	Per Set Par jeu Pr. Satz Juego de
1 01 014676	Ball	Bille	Kugel	Bola	48
4 02 02-0047	Nut	Ecrou	Mutter	Tuerca	4
1 02 02-0360	Screw	Vis	Schraube	Tornillo	4
4 01 15-5155	Washer	Rondelle	Scheibe	Arandela	4
1 01 21-5164	Nut	Ecrou	Mutter	Tuerca	2
1 02 21-5371	Screw	Vis	Schraube	Tornillo	2
1 09 27-5135	Bolt	Boulon	Schraube	Tornillo	
4 01 29-3319	Lockwasher	Rondelle frein	Sicherungsscheibe	Freno	4
1 13 29-5289	Bolt	Boulon	Schraube	Tornillo	2
1 09 29-5315	Nut	Ecrou	Mutter	Tuerca	
4 01 36-0382	Lockwasher	Rondelle frein	Sicherungsscheibe	Freno	2
1 11 40-5018	Cap	Chapeau	Abdeckkappe	Tapon	
1 16 40-5027	Bottom Cone	Cone inférieur	Unterkonus	Cona inferior	
1 19 40-5029	Top Cone	Cone supérieur	Oberkonus	Cona superior	
1 21 40-5058	Support Ring	Anneau de support	Stutzring	Anillo de soporte	
1 46 40-5061	Cowl	Capotage de phare	Scheinwerferverkleidung	Capucha	
1 08 40-5090	Clip	Bride	Klammer	Grapa	
1 46 41-5012	Top Yoke	Attache supérieur te de fourche	Oberjoch	Horqueta superior	
1 53 41-5013	Bottom Yoke	Attache inférieur te de fourche	Unterjoch	Horqueta inferior	
1 13 42-4099	Lockwasher	Rondelle frein	Sicherungsscheibe	Freno	2
1 05 42-5110	Nut	Ecrou	Mutter	Tuerca	2
1 18 65-5333	Clip	Bride	Klammer	Grapa	
1 09 65-5334	Bolt	Boulon	Schraube	Tornillo	4

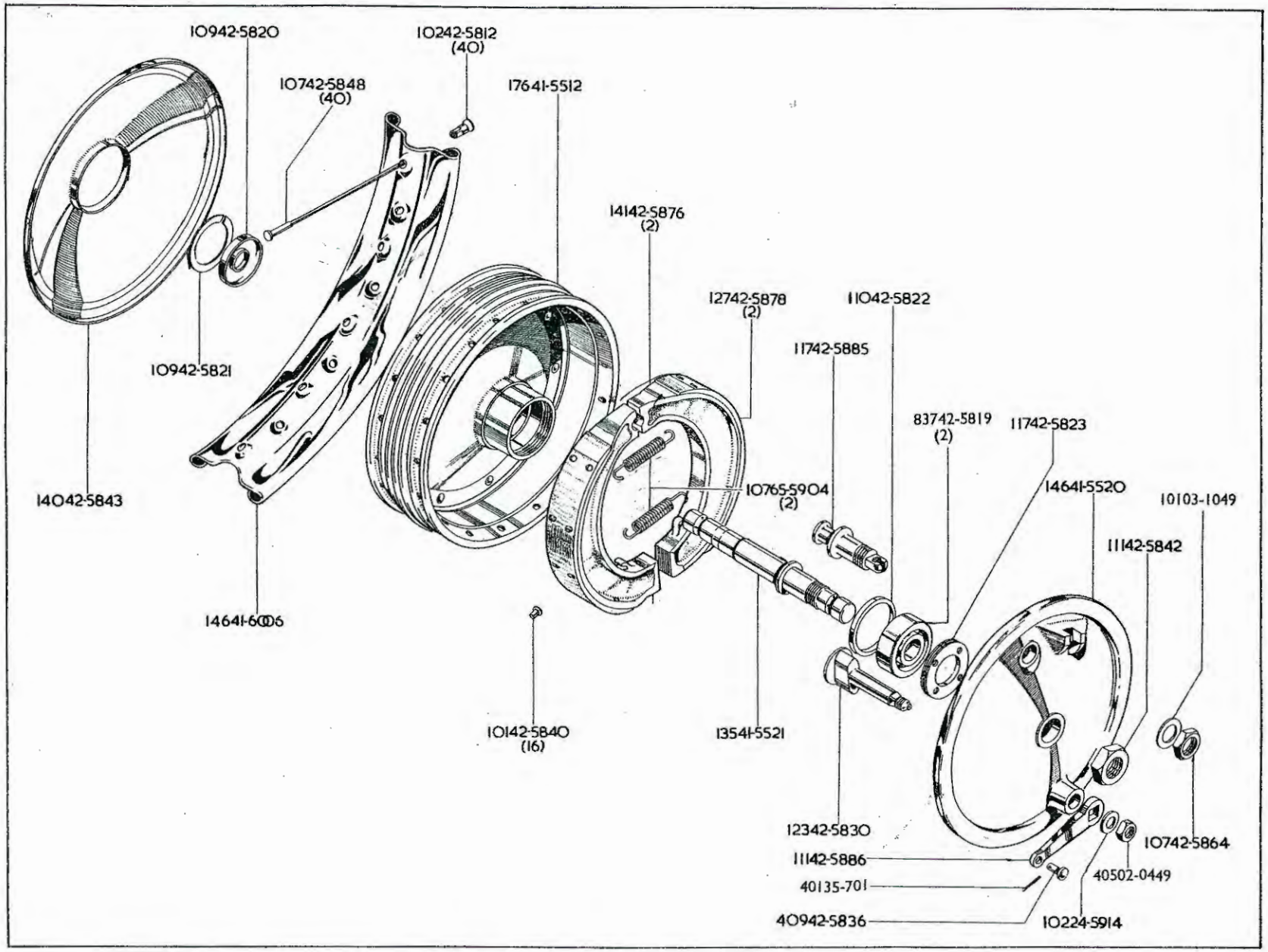
10942-5820
10242-5812
(40)
10742-5848
(40)
17641-5512
14142-5876
(2)
12742-5878
(2)
11042-5822
11742-5885
10942-5821
83742-5819
(2)
11742-5823
14042-5843
10765-5904
(2)
14641-5520
10103-1049
11142-5842
14641-6006
10142-5840
(16)
13541-5521
12342-5830
10742-5864
11142-5886
40502-0449
40135-701
40942-5836
10224-5914

FRONT WHEEL
ROUE AV
VORDERRAD
RUEDA DELANTERA

Spares No. No. de pièce Ersatzteil-Nr. No. de repuesto	Description	Designation	Beschreibung	Descripción	Per Set Par jeu Pr. Satz Juego de
1 80 41–5511	Front Wheel complete	Roue av complet	Vorderrad Kompl.	Rueda delantera completa	
1 76 41–5512	Front Hub complete	Moyeau de roue av complet	Vorderradnabe Kompl.	Cubo de rueda del completa	
1 41 42–5876	Brake Shoe complete	Segment complet	Bremsbacke Kompl.	Zapata completa	2
4 05 02–0449	Nut	Ecrou	Mutter	Tuerca	
1 01 03–1049	Washer	Rondelle	Scheibe	Arandela	
1 02 24–5914	Washer	Rondelle	Scheibe	Arandela	
4 01 35–0701	Split Pin	Goupille fendue	Splint	Chaveta hendida	
1 46 41–5520	Brake Back Plate	Disque de frein	Bremsscheibe	Disco de freno	
1 35 41–5521	Spindle	Arbre	Welle	Arbol	
1 46 41–6006	Rim	Jante	Felge	Llanta	
1 02 42–5812	Nipple	Ecrou de rayon	Nippel	Tuerca	
8 37 42–5819	Bearing	Roulement	Lager	Rolamiento	2
1 09 42–5820	Cover	Couvercle	Schutzkappe	Tapa	
1 09 42–5821	Circlip	Arrêtoir	Sprengring	Freno	
1 10 42–5822	Spacer Ring	Bague entretoise	Distanzring	Anillo espaciador	
1 17 42–5823	Retainer	Arrêtoir	Sicherung	Freno	
1 23 42–5830	Brake Cam	Clé de frein	Bremsschlüssel	Llave de freno	
4 09 42–5836	Pivot Pin	Axe	Bolzen	Eje	
1 01 42–5840	Rivet	Rivet	Niet	Remache	16
1 11 42–5842	Nut	Ecrou	Mutter	Tuerca	
1 40 42–5843	Cover	Couvercle	Schutzkappe	Tapa	
1 07 42–5848	Spoke	Rayon	Speiche	Raio	40
1 07 42–5864	Nut	Ecrou	Mutter	Tuerca	
1 27 42–5878	Brake Lining	Garniture de frein	Bremsbelag	Guarnición	2
1 17 42–5885	Fulcrum Pin	Goupille de butée	Drehbolzen	Espiga	
1 11 42–5886	Brake Cam Lever	Levier de came de frein	Bremsnockenhebel	Palanca de freno	
1 07 65–5904	Spring	Ressort	Feder	Resorte	2

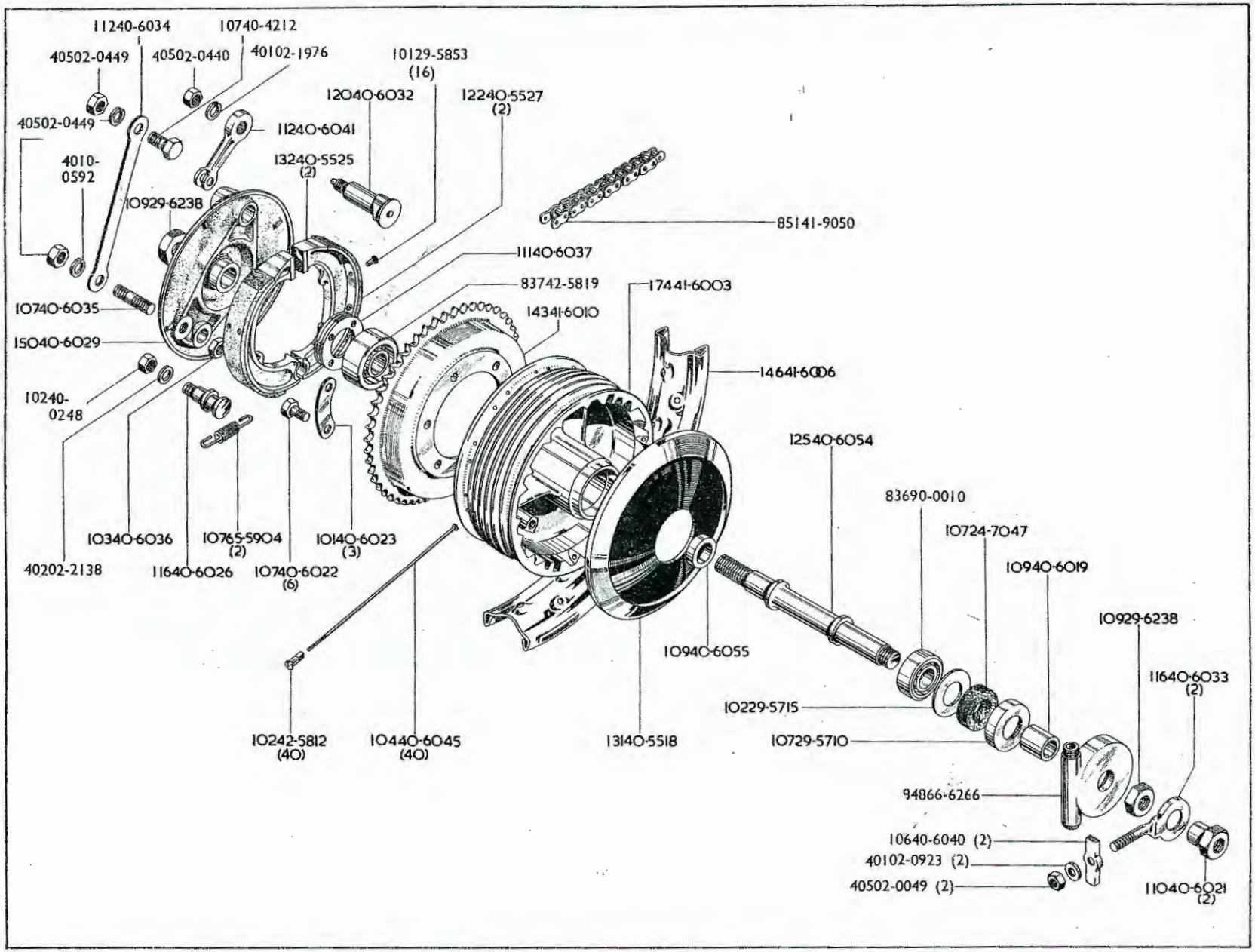
11240-6034
10740-4212
40502-0449
40502-0440
40102-1976
10129-5853
(16)
12040-6032
12240-5527
(2)
40502-0449
11240-6041
4010-
0592
13240-5525
(2)
10929-6238
85141-9050
11140-6037
83742-5819
17441-6003
10740-6035
14341-6010
15040-6029
14641-6006
10240-
0248
12540-6054
83690-0010
10724-7047
10340-6036
10765-5904
(2)
10140-6023
(3)
10940-6019
40202-2138
11640-6026
10740-6022
(6)
10929-6238
10940-6055
11640-6033
(2)
10229-5715
10242-5812
(40)
10440-6045
(40)
13140-5518
10729-5710
94866-6266
10640-6040 (2)
40102-0923 (2)
40502-0049 (2)
11040-6021
(2)

REAR WHEEL
ROUE AR
HINTERRAD
RUEDA TRASERA

Spares No. No. de pièce Ersatzteil-Nr. No. de repuesto	Description	Designation	Beschreibung	Descripción	Per Set Par jeu Pr. Satz Juego de
1 82 41-6002	Rear Wheel complete	Roue ar complet	Hinterrad Kompl.	Rueda trasera completa	
1 74 41-6003	Rear Hub complete	Moyeu de roue ar complet	Hinterradnabe Kompl.	Cuebo de rueda tras. completa	
4 05 02-0049	Nut	Ecrou	Mutter	Tuerca	2
4 05 02-0440	Nut	Ecrou	Mutter	Tuerca	
4 05 02-0449	Nut	Ecrou	Mutter	Tuerca	3
4 01 02-0522	Lockwasher	Rondelle frein	Sicherungsscheibe	Freno	2
4 01 02-0923	Washer	Rondelle	Scheibe	Arandela	2
4 01 02-1967	Lockwasher	Rondelle frein	Sicherungsscheibe	Freno	
4 02 02-2138	Washer	Rondelle	Scheibe	Arandela	
1 07 24-7047	Felt Washer	Rondelle feutre	Filzscheibe	Arandela de filetro	
1 07 29-5710	Retainer (o/s)	Arrêtoir (droite)	Sicherung (Rechts)	Freno (der.)	
1 02 29-5715	Washer (o/s)	Rondelle (droite)	Scheibe (Rechts)	Arandela (der.)	
1 01 29-5853	Rivet	Rivet	Niet	Remache	16
1 09 29-6238	Nut	Ecrou	Mutter	Tuerca	2
1 07 40-4212	Bolt	Boulon	Schraube	Tornillo	
1 31 40-5518	Cover	Couvercle	Schutzkappe	Tapa	
1 32 40-5525	Brake Shoe complete	Segment complet	Bremsbacke Kompl.	Zapata completa	2
1 22 40-5527	Brake Lining	Garniture de frein	Bremsbelag	Guarnición	2
1 09 40-6019	Distance Piece (o/s)	Entretoise (droite)	Distanzrohr (Rechts)	Distanciador (der.)	
1 10 40-6021	Nut	Ecrou	Mutter	Tuerca	2
1 07 40-6022	Bolt	Boulon	Schraube	Tornillo	6
1 01 40-6023	Locking Plate	Plaque de blocage	Sicherungsscheibe	Placa cerradora	3
1 16 40-6026	Fulcrum Pin	Goupille de butée	Drehbolzen	Espiga	
1 50 40-6029	Anchor Plate	Plaque d'ancrage	Ankerplatte	Soporte	
1 20 40-6032	Brake Cam	Came de frein	Bremsnocke	Llave de freno	
1 16 40-6033	Adjuster	Vis de réglage	Einstellschraube	Tornillo de ajuste	2
1 12 40-6034	Anchor Strap	Bride d'ancrage	Ankerhalterung	Anclaje de freno	
1 07 40-6035	Stud	Goujon	Stehbolzen	Esparago	
1 03 40-6036	Nut	Ecrou	Mutter	Tuerca	
1 11 40-6037	Retainer	Arrêtoir	Sicherung	Freno	
1 06 40-6040	Adjuster Cap	Couvercle de réglage	Kappe	Tapón	2
1 12 40-6041	Brake Cam Lever	Levier de came de frein	Bremsnockenhebel	Palanca de freno	
1 04 40-6045	Spoke	Rayon	Speiche	Raio	40
1 25 40-6054	Spindle	Arbre	Welle	Arbol	
1 09 40-6055	Distance Piece (n/s)	Entretoise (gauche)	Distanzrohr (Links)	Distanciador (izq.)	
1 46 41-6006	Rim	Jante	Felge	Llanta	
1 43 41-6010	Brake Drum	Tambour de frein	Bremstrommel	Tambor del freno	
8 51 41-9050	Chain	Chaine	Kette	Cadena	
1 02 42-5812	Nipple	Ecrou de rayon	Nippel	Tuerca	40
8 37 42-5819	Bearing (n/s)	Roulement (gauche)	Lager (Links)	Rolamiento (izq.)	
1 07 65-5904	Spring	Ressort	Feder	Resorte	2
8 48 66-6266	Speedometer Gearbox	Entrainement du compteur	Tachoantrieb	Accionamiento del velocimetro	
8 36 90-0010	Bearing (o/s)	Roulement (droite)	Lager (Rechts)	Rolamiento (der.)	

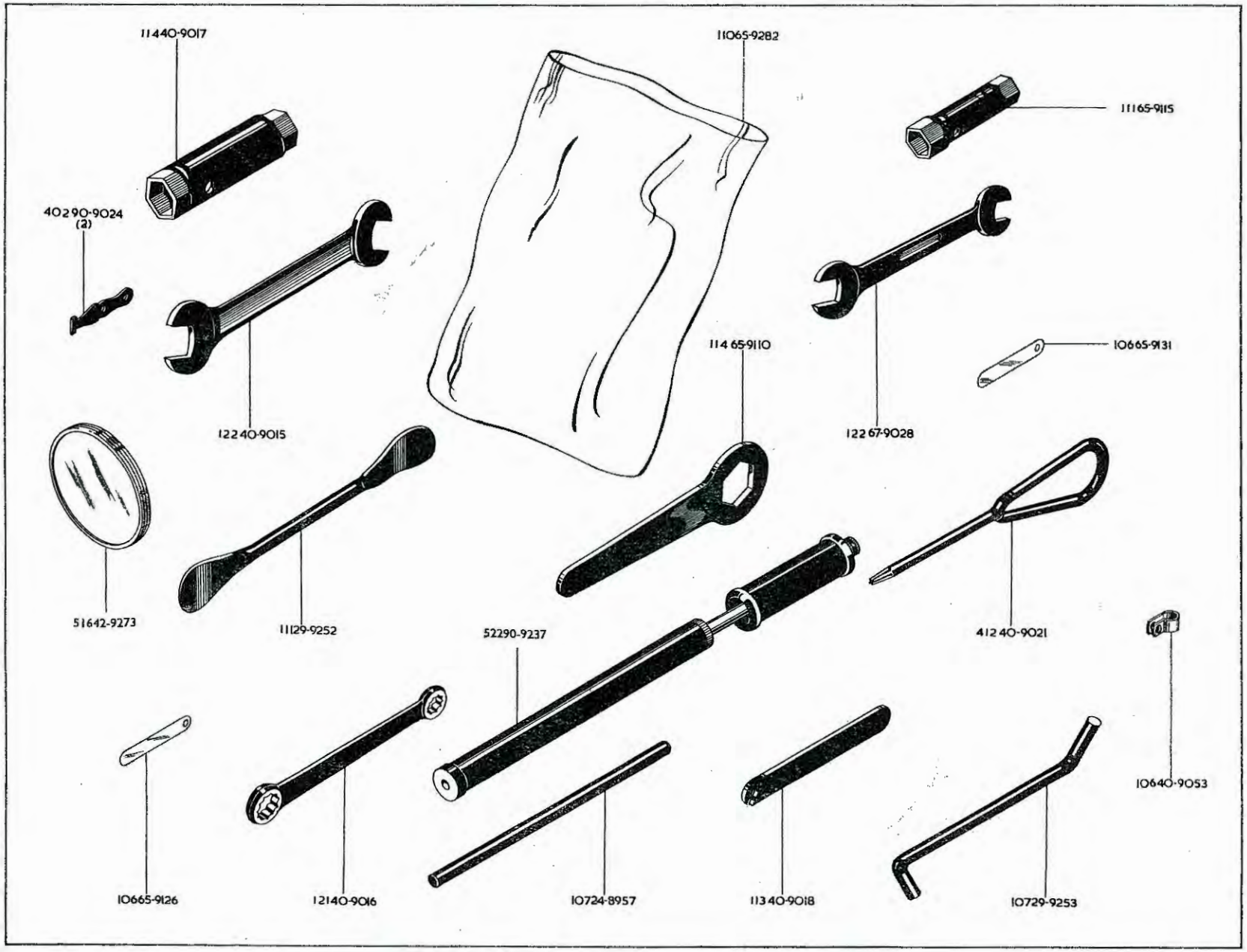
11440-9017
11065-9282
11165-9115
40290-9024
(2)
12240-9015
11465-9110
10665-9131
12267-9028
51642-9273
11129-9252
52290-9237
41240-9021
10640-9053
10665-9126
12140-9016
10724-8957
11340-9018
10729-9253

TOOLS
OUTILS
WERKZEUGE
HERRAMIENTOS

SUNDRIES
PIÈCES DIVERSES
SONTIGE TEILE
PIEZAS VARIAS

Spares No. No. de pièce Ersatzteil-Nr. Nò. de repuesto	Description	Designation	Beschreibung	Descripción	Per set Par jeu Pr. Satz Juego de
1 49 40–9012	Tool Kit complete	Trousse à butils complet	Werkzeuge Kompl.	Herramientos completa	
1 07 24–8957	Tommy Bar	Broche	Montiereisen	Barra para llaves de tubo	
1 11 29–9252	Tyre Lever	Démonte-pneu	Reifenheber	Palanca desmonta-neumaticos	
1 07 29–9253	Tommy Bar	Broche	Montiereisen	Barra para llaves de tubo	
1 22 40–9015	Double Ended Spanner	Clé à fourche double	Doppelschraubenschlüssel	Llave de dos bocas	
1 21 40–9016	Ring Spanner	Clé annulaire	Ringschlüssel	Llave anular	
1 14 40–9017	Box Spanner	Clé à tube	Steckschlüssel	Llave de tubo	
1 13 40–9018	Single Ended Spanner	Clé à une fourche	Schlüssel	Llave de una boca	
4 12 40–9021	Screwdriver	Tournevis	Schraubenzieher	Destornillador	
1 06 40–9053	Clip	Bride	Klammer	Grapa	
5 16 42–9273	Licence Holder	Porte-permis	Linzenzhalter	Portalicencia	
1 14 65–9110	Ring Spanner	Clé annulaire	Ringschlüssel	Llave anular	
1 11 65–9115	Box Spanner	Clé à tube	Steckschlüssel	Llave de tubo	
1 06 65–9126	Feeler Gauge (.012 in.)	Calibre à lames (.304 mm.)	Spion (.304 mm.)	Calibrador de cinta (.304 mm.)	
1 06 65–9131	Feeler Gauge (.014 in.)	Calibre à lames (.355 mm.)	Spion (.355 mm.)	Calibrador de cinta (.355 mm.)	
1 10 65–9282	Tool Bag	Sacoche à outils	Werkzeugtasche	Bolsa de herramientos	
1 22 67–9028	Double Ended Spanner	Clé à fourche double	Doppelschraubenschlüssel	Llave de dos bocas	
4 02 90–9024	Rubber Strap	Bride, caoutchouc	Gummiband	Cinta de goma	2
5 22 90–9237	Inflator	Pompe à air	Luftpumpe	Bomba de aire	

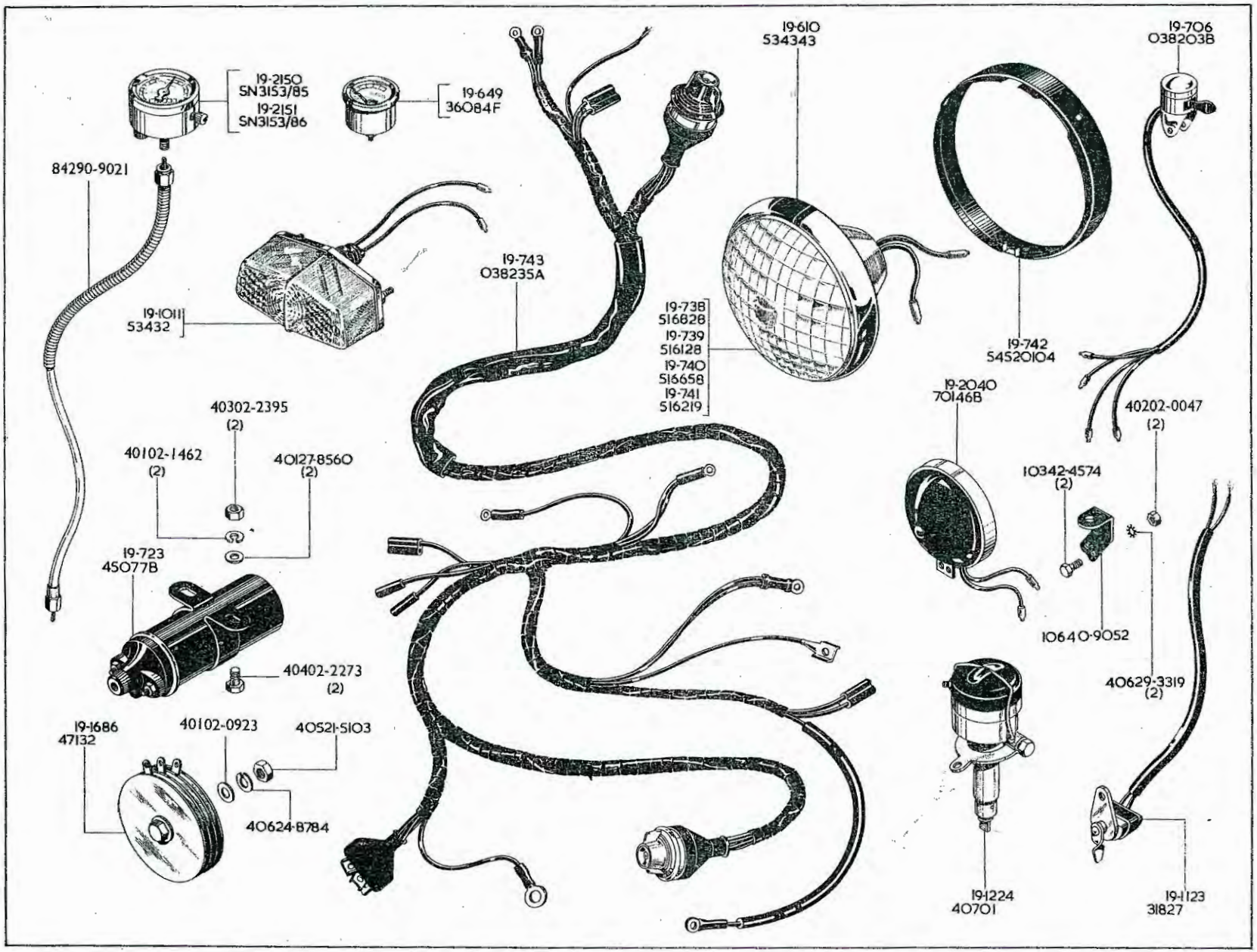
19-2150
SN3153/85
19-2151
SN3153/86
19-649
36084F
84290-9021
19-1011
53432
19-743
038235A
19-610
534343
19-706
038203B
19-738
516828
19-739
516128
19-740
516658
19-741
516219
19-742
54520104
19-2040
70146B
40202-0047
(2)
40302-2395
(2)
40102-1462
(2)
40127-8560
(2)
10342-4574
(2)
19-723
45077B
10640-9052
40402-2273
(2)
40629-3319
(2)
19-1686
47132
40102-0923
40521-5103
40624-8784
19-1224
40701
19-1123
31827

ELECTRICAL EQUIPMENT
EQUIPEMENT ELECTRIQUE
ELEKTR AUSRÜSTUNG
EQUIPO' ELECTRICO

Spares No. No. de pièce Ersatzteil-Nr. Nd. de repuesto	Description	Designation	Beschreibung	Descripción	Makers No. No. du fabricant Nr.-Hersteller No. fabricante
8 42.90-9021	Speedometer Cable	Câble de compteur complet	Tachometerkabel Komp.	Arbol de transmisión del velocimetro. completa	DF1110/21
4 02 02-0047	Nut	Ecrou	Mutter	Tuerca	
4 01 02-0923	Washer	Rondelle	Scheibe	Arandela	
4 01 02-1462	Lockwasher	Rondelle frein	Sicherungsscheibe	Freno	
4 04 02-2273	Bolt	Boulon	Schraube	Tornillo	
4 03 02-2395	Nut	Ecrou	Mutter	Tuerca	
— 19-616	Headlamp Rim	Portière de phare	Scheinwerferring	Anillo porta-cristal para faro	534343
— 19-649	Ammeter	Ampèremètre	Amperemeter	Amperimetro	36084
— 19-706	Dipper Switch	Inverseur code phare	Abblendschalter	Conmutador de cruce	038203
— 19-723	Coil	Bobine	Spule	Bobina	45077
— 19-738	Headlamp Unit	Phare complet	Scheinwerfer Kompl.	Faro completa	516828
— 19-739	Headlamp Unit (Export)	Phare complet (export)	Scheinwerfer Kompl. (Ausfuhr)	Faro completa (exportación)	516828
— 19-740	Headlamp Unit (Continental)	Phare complet (continental)	Scheinwerfer Kompl. (Kontinental)	Faro completa (continental)	516658
— 19-741	Headlamp Unit (France)	Phare complet (Francais)	Scheinwerfer Kompl. (Französisch).	Faro completa (Frances)	516912
— 19-742	Headlamp Support Ring	Anneau de support pour phare	Haltering für Scheinwerfer	Anillo de soporte del faro	54520104
— 19-743	Harness complete	Faisceau de câbles complet	Kabelstrang Kompl.	Juego de cables completa	038235
— 19-1011	Rear Lamp	Feu rouge arrière	Schlusslicht	Luz roja trasera	53432
— 19-1123	Stop Lamp Switch	Commutateur de lampe de stop	Stoplichtschalter	Interuptor para la luz "stop"	31827
— 19-1224	Distributor	Distrbuteur	Verteiler	Distribuidor	40701
— 19-1670	Battery	Batterie	Batterie	Bateria	54028263
— 19-1686	Rectifier	Redresseur	Gleichrichter	Rectificador	47132
— 19-2040	Horn	Avertisseur	Hupe	Bocina	70146
— 19-2150	Speedometer (m.p.h.)	Compteur de vitesses (m.p.h.)	Tachometer (m.p.h.)	Velocimetro (m.p.h.)	SN3153/85
— 19-2151	Speedometer (k.p.h.)	Compteur de vitesses (k.p.h.)	Tachometer (k.p.h.)	Velocimetro (k.p.h.)	SN3153/86
4 05 21-5103	Nut	Ecrou	Mutter	Tuerca	
4 01 24-8784	Lockwasher	Rondelle frein	Sicherungsscheibe	Freno	
4 01 27-8560	Washer	Rondelle	Scheibe	Arandela	
4 01 29-3319	Lockwasher	Rondelle frein	Sicherungsscheibe	Freno	
1 06 40-9052	Bracket	Support	Verstrebung	ScPorte	
1 03 42-4574	Bolt	Boulon	Schraube	Tornillo	

British Only

MOTORCYLES AND PARTS INC.

32451 PARKLANE ST.
GARDEN CITY, MI 48135 USA

WWW.BRITISHONLY.COM
INFO@BRITISHONLY.COM

RETAIL: 1-800-278-6659 ***WHOLESALE: 1-800-852-9253*** ***FAX: 1-734-422-9253***

WORLDS LARGEST SELECTION OF FACTORY ORIGINAL NEW AND USED PARTS

45,000 SQ. FT. OF MOTORCYLE PARTS & ACCESSORIES FROM 1911 TO 1984 FOR ALL BRITISH MAKES!
CASH FOR ALL BRITISH BIKES, PARTS AND LITERATURE

SPECIALIZING IN
VINTAGE MOTORCYLCE PARTS

TRIUMPH
Norton
BSA

THE BIGGEST!

ENGINE REBUILDING PARTS
GASKET - SEALS - BEARINGS
BUSHINGS - PISTONS - RINGS
CLUTCHES - TUNE UP PARTS
SPEED EQUIPMENT

THE BEST!

STOCK AND CUSTOM PARTS
SEATS - HANDLEBARS - CHAINS
TIRES - TUBES - EXHAUST PIPES
MUFFLERS - GAS TANKS - FENDERS
RESTORATION PARTS

THE ONLY!

Central Wheel Components · Barnett Clutches & Cables · Classic Transfers Robert Derrick Ltd · Renold · Lucas · Amal · Emgo Your Powersport Supplier · Brituro England · JP Pistons · Hastings · UH

VELOCETTE • ANDOVER NORTON • TEC • HAYNES • P&P SEATING • WASSELL • MORGO
ALPHA BEARINGS • M.A.C. PRODUCTS • JOE HUNT MAGNETOS • J.J. CABLES • BUCHANAN'S
L.A. SLEEVE • MEGACYCLE CAMS • T.J. WASSELL LIMITED • SUDCO INTERNATIONAL
ACE CLASSICS LONDON • CLASSIC GASKETS • BRITISH WIRING • PBM ENGINEERING
TRI-COR ENGLAND • LEAK PROOF SEALS • MCA (ASTON) LIMITED • GARDNER - WESTCOTT

WE ACCEPT VISA - MASTERCARD - DISCOVER - AMERICAN EXPRESS

PARTS SHIPPED WORDLWIDE !!! VISA · MasterCard · Discover · American Express

VISIT OUR EBAY STORE
http://stores.ebay.com/British-Only-Motorcycles-And-Parts

British Only

MOTORCYLES AND PARTS INC.

32451 PARKLANE ST.
GARDEN CITY, MI 48135 USA

WWW.BRITISHONLY.COM
INFO@BRITISHONLY.COM

RETAIL: 1-800-278-6659 ***WHOLESALE: 1-800-852-9253*** ***FAX: 1-734-422-9253***

WORLDS LARGEST SELECTION OF FACTORY ORIGINAL NEW AND USED PARTS

45,000 SQ. FT. OF MOTORCYLE PARTS & ACCESSORIES FROM 1911 TO 1984 FOR ALL BRITISH MAKES!
CASH FOR ALL BRITISH BIKES, PARTS AND LITERATURE

SPECIALIZING IN
VINTAGE MOTORCYLCE PARTS

TRIUMPH
Norton
BSA

THE BIGGEST!

ENGINE REBUILDING PARTS
GASKET - SEALS - BEARINGS
BUSHINGS - PISTONS - RINGS
CLUTCHES - TUNE UP PARTS
SPEED EQUIPMENT

THE BEST!

STOCK AND CUSTOM PARTS
SEATS - HANDLEBARS - CHAINS
TIRES - TUBES - EXHAUST PIPES
MUFFLERS - GAS TANKS - FENDERS
RESTORATION PARTS

THE ONLY!

Central Wheel Components · Barnett Clutches & Cables · Classic Transfers Robert Derrick Ltd · Renold · Lucas · Amal · Emgo Your Powersport Supplier · Brituro England · JP Pistons · Hastings · UH

VELOCETTE • ANDOVER NORTON • TEC • HAYNES • P&P SEATING • WASSELL • MORGO
ALPHA BEARINGS • M.A.C. PRODUCTS • JOE HUNT MAGNETOS • J.J. CABLES • BUCHANAN'S
L.A. SLEEVE • MEGACYCLE CAMS • T.J. WASSELL LIMITED • SUDCO INTERNATIONAL
ACE CLASSICS LONDON • CLASSIC GASKETS • BRITISH WIRING • PBM ENGINEERING
TRI-COR ENGLAND • LEAK PROOF SEALS • MCA (ASTON) LIMITED • GARDNER - WESTCOTT

WE ACCEPT VISA - MASTERCARD - DISCOVER - AMERICAN EXPRESS

PARTS SHIPPED WORDLWIDE !!! VISA · MasterCard · Discover · American Express

VISIT OUR EBAY STORE
http://stores.ebay.com/British-Only-Motorcycles-And-Parts

British Only

MOTORCYCLES AND PARTS INC.
32451 PARKLANE ST
GARDEN CITY, MI 48135 USA
PHONE: **800-278-6659**
FAX: **734-422-9253**

Year:	Make:	Model:
Engine #		
Frame #		

WWW.BRITISHONLY.COM
INFO@BRITISHONLY.COM

Quantity	Part #	Description	Each	Amount

Date _____ / _____ / _____ **Customer #** _____ **Salesperson** _____

Card Number _____ **Expires** _____

Name _____

Address _____

City/State/Zip _____

Phone _____ / _____ **Fax** _____

Email _____

Signature _____

Subtotal	
Insurance	
Shipping	
Total	
Michigan Residents Add 6% Sales Tax	
Amount Enclosed	

FOLD

Name _____

Address _____

City _____

State _____ Zip _____

USE
FIRST CLASS
LETTER
POSTAGE

British Only

MOTORCYCLES AND PARTS INC.

32451 PARKLANE ST
GARDEN CITY, MI 48135 USA

FOLD

British Only

MOTORCYCLES AND PARTS INC.
32451 PARKLANE ST
GARDEN CITY, MI 48135 USA
PHONE: **800-278-6659**
FAX: **734-422-9253**

Year:	Make:	Model:
Engine #		
Frame #		

WWW.BRITISHONLY.COM
INFO@BRITISHONLY.COM

Quantity	Part #	Description	Each	Amount

Date _____ / _____ / _____ **Customer #** _____ **Salesperson** _____

Card Number _____ **Expires** _____

Name _____

Address _____

City/State/Zip _____

Phone _____ / _____ **Fax** _____

Email _____

Signature _____

Subtotal	
Insurance	
Shipping	
Total	
Michigan Residents Add 6% Sales Tax	
Amount Enclosed	

FOLD

Name _____

Address _____

City _____

State _____ Zip _____

USE
FIRST CLASS
LETTER
POSTAGE

British Only

MOTORCYCLES AND PARTS INC.

32451 PARKLANE ST
GARDEN CITY, MI 48135 USA

FOLD