BSA

SPARES

250 STAR

model C15

Catalogue No. 00-5074

British Only

MOTORCYLES AND PARTS INC.

32451 PARKLANE ST.
GARDEN CITY, MI 48135 USA

WWW.BRITISHONLY.COM
INFO@BRITISHONLY.COM

RETAIL: 1-800-278-6659 ***WHOLESALE: 1-800-852-9253*** ***FAX: 1-734-422-9253***

WORLDS LARGEST SELECTION OF FACTORY ORIGINAL NEW AND USED PARTS

45,000 SQ. FT. OF MOTORCYLE PARTS & ACCESSORIES FROM 1911 TO 1984 FOR ALL BRITISH MAKES!
CASH FOR ALL BRITISH BIKES, PARTS AND LITERATURE

SPECIALIZING IN
VINTAGE MOTORCYLCE PARTS

TRIUMPH
Norton
BSA

THE BIGGEST!

ENGINE REBUILDING PARTS
GASKET - SEALS - BEARINGS
BUSHINGS - PISTONS - RINGS
CLUTCHES - TUNE UP PARTS
SPEED EQUIPMENT

THE BEST!

STOCK AND CUSTOM PARTS
SEATS - HANDLEBARS - CHAINS
TIRES - TUBES - EXHAUST PIPES
MUFFLERS - GAS TANKS - FENDERS
RESTORATION PARTS

THE ONLY!

Central Wheel Components · Barnett Clutches & Cables · Classic Transfers Robert Derrick Ltd · Renold · Lucas · Amal · Emgo Your Powersport Supplier · Brituro England · JP Pistons · Hastings · UH

VELOCETTE • ANDOVER NORTON • TEC • HAYNES • P&P SEATING • WASSELL • MORGO
ALPHA BEARINGS • M.A.C. PRODUCTS • JOE HUNT MAGNETOS • J.J. CABLES • BUCHANAN'S
L.A. SLEEVE • MEGACYCLE CAMS • T.J. WASSELL LIMITED • SUDCO INTERNATIONAL
ACE CLASSICS LONDON • CLASSIC GASKETS • BRITISH WIRING • PBM ENGINEERING
TRI-COR ENGLAND • LEAK PROOF SEALS • MCA (ASTON) LIMITED • GARDNER - WESTCOTT

WE ACCEPT VISA - MASTERCARD - DISCOVER - AMERICAN EXPRESS

PARTS SHIPPED WORDLWIDE !!! VISA · MasterCard · Discover · American Express

VISIT OUR EBAY STORE
http://stores.ebay.com/British-Only-Motorcycles-And-Parts

British Only

MOTORCYLES AND PARTS INC.

32451 PARKLANE ST.
GARDEN CITY, MI 48135 USA

WWW.BRITISHONLY.COM
INFO@BRITISHONLY.COM

RETAIL: 1-800-278-6659 ***WHOLESALE: 1-800-852-9253*** ***FAX: 1-734-422-9253***

WORLDS LARGEST SELECTION OF FACTORY ORIGINAL NEW AND USED PARTS

45,000 SQ. FT. OF MOTORCYLE PARTS & ACCESSORIES FROM 1911 TO 1984 FOR ALL BRITISH MAKES!
CASH FOR ALL BRITISH BIKES, PARTS AND LITERATURE

SPECIALIZING IN
VINTAGE MOTORCYLCE PARTS

TRIUMPH
Norton
BSA

THE BIGGEST!

ENGINE REBUILDING PARTS
GASKET - SEALS - BEARINGS
BUSHINGS - PISTONS - RINGS
CLUTCHES - TUNE UP PARTS
SPEED EQUIPMENT

THE BEST!

STOCK AND CUSTOM PARTS
SEATS - HANDLEBARS - CHAINS
TIRES - TUBES - EXHAUST PIPES
MUFFLERS - GAS TANKS - FENDERS
RESTORATION PARTS

THE ONLY!

Central Wheel Components · Barnett Clutches & Cables · Classic Transfers Robert Derrick Ltd · Renold · Lucas · Amal · Emgo Your Powersport Supplier · Brituro England · JP Pistons · Hastings · UH

VELOCETTE • ANDOVER NORTON • TEC • HAYNES • P&P SEATING • WASSELL • MORGO
ALPHA BEARINGS • M.A.C. PRODUCTS • JOE HUNT MAGNETOS • J.J. CABLES • BUCHANAN'S
L.A. SLEEVE • MEGACYCLE CAMS • T.J. WASSELL LIMITED • SUDCO INTERNATIONAL
ACE CLASSICS LONDON • CLASSIC GASKETS • BRITISH WIRING • PBM ENGINEERING
TRI-COR ENGLAND • LEAK PROOF SEALS • MCA (ASTON) LIMITED • GARDNER - WESTCOTT

WE ACCEPT VISA - MASTERCARD - DISCOVER - AMERICAN EXPRESS

PARTS SHIPPED WORDLWIDE !!! VISA · MasterCard · Discover · American Express

VISIT OUR EBAY STORE
http://stores.ebay.com/British-Only-Motorcycles-And-Parts

COPY OF B.S.A. REPAIRS GUARANTEE.

1. Whilst the highest standard of workmanship and materials is aimed at, we cannot accept liability for any defects appearing more than three months after the machine, assembly or component has left our works after being repaired.

2. We will repair or replace at our option free of charge any defective work, materials or parts relating to the repairs carried out by us appearing witbin that time but shall not be under any further or other liability for any other loss or damage whether direct or consequential and our liability shall be limited to the cost of so making good. We do not undertake to bear the cost of fitting such repaired part or accessory.

3. We do not accept liability in respect of parts of proprietary manufacture, e.g., tyres, saddles, chains, speedometers, revolution counters and electrical equipment which may be used by us in effecting a repair. All other conditions and warranties statutory or otherwise express or implied are hereby excluded.

KOPIE DER "BSA" REPARATUR-GARANTIE

1. Wir bemühen uns die höchste Fertigungsqualität zu erreichen, und wir verwenden die erstklassigsten Werkstoffe. Jedoch können wir trotzdem keine Haftpflicht für Mängel überhehmen, die später als drei Monate, nachdem eine Maschine, Untereinheit oder Teil nach Reparatur unser Werk verlassen hat, auftreten.

2. Gemäss unserer Wahl reparieren oder ersetzen wir kostenlos innerhalb der obeengenannten Frist alle schadhaften Teile, die im Zusammenhang mit den von uns ausgeführten Reparaturen stehen. Desgleichen machen wir innerhalb der obenerwähnten Frist alle fehlerhafte Arbeit gut, die mit den von uns ausgeführten Reparaturen zusammenhängt. Ferner ersetzen wir auch innerhalb des obengenannten Zeitraumes alle mangelhaften Werkstoffe, die im Zusammenhang mit den von uns ausgeführten Reparaturen stehen. Jedoch übernehmen wir keinerlei weitere oder andere Verpflichtung für andere Verluste oder Schäden, die direkt mit den von uns ausgeführten Reparaturen zusammenhängen oder als Folge solcher Reparaturen entstehen. Desgleichen beschränken sich unsere Verpflichtungen auf die Kosten der Wiedergutmachung und schliessen die Kosten der Montage von reparierten Teilen oder im Zusammenhaug mit der Reparatur gelieferten Zubehörteilen nicht ein.

3. Für Teile und Zubehörteile (z.B. Reifen, Sättel, Ketten, Geschwindigkeitmesser, Umdrehungszähler und elektrische Ausrüstung), die nicht von uns hergestellt werden, anderer Herkunft sind und bei von uns ausgeführten Reparaturen Verwendung finden, übernehmen wir keinerlei Haftpflicht. Alle anderen Bedingungen und gesetzlichen Verpflichtungen, die hier nicht ausdrücklich erwähnt oder miteinbegriffen worden sind, sind von der vorliegenden Garantie ausgeschlossen.

COPIE DE LA GARANTIE B.S.A. RELATIVE A REPARATIONS.

1. Bien que le but que nous essayons d'atteindre soit de fournir des pièces de la plus haute qualité et d'assurer une exécution irréprochable nous ne pouvons accepter aucune responsabilité pour des défauts qui se manifestent plus de trois mois après la date où la machine, l'ensemble ou la pièce quitte nos usines après réparation.

2. Nous réparerons ou remplacerons gratuitement, à notre charge, tout travail défectueux et toute matière ou pièce défectueuse ayant rapport au travail exécuté si les défants se manifestent avant le terme de la période citée ci-dessus mais nous ne pouvons accepter aucune responsabilité supplémentaire à l'égard d'autres pertes ou d'avaries, soit directes soit indirectes et notre responsabilité sera limitée au prix de réparation ou de remplacement indiqué. Nous ne supportons pas les frais de montage del a pièce ou de l'accessoire réparé.

3. Nous n'acceptons pas de responsabilité à l'égard de pièces et d'accessoires fabriqués par d'autres fabricants, par example, pneus, selles, chaines, compte-kilomètres, compte-tours, appareils électriques etc., dont nous pouvons nous servir pour exécuter une réparation. Toutes autres conditions et garanties, réglementaires ou autres, expresses ou tacities sont par ces présentes exclues.

COPIA DE LA GARANTIA B.S.A. RELATIVA A REPARACIONES

1. Mientras que aspiremos suministrar piezas de la más alta calidad y asegurar una ejecución perfecta de todo trabajo de reparación no podemos aceptar responsabilidad alguna con respecto a imperfecciones que puedan mostrarse después de un término de tres meses desde la fecha en que la máquina, el conjunto o la pieza sale de nuestra fábrica después de la reparación

2. Según nuestra opción repararemos o reemplaceremos a nuestra carga todo defecto de trabajo, de materia o de piezas tocante a la reparación ejecutada por nosotros que se muestra dentro del término citado arriba pero no aceptamos responsabilidad alguna para otro siniestro o otra avería sea directo o indirecto y nuestra reponsabilidad se restringirá al valor de restitución. No nos encargamos del costo de montar piezas o accesorios reparados.

3. No aceptamos responsibilidad alguna para piezas o accesorios de otros fabricantes, es decir neumáticos, sillinies, cadenas, velocimétros, contagiros y equipos eléctricos que podrían emplearse para una reparación. Todas otras condiciones y garantías estatutarias o no, explícitas o denotadas son excluidas por este acto.

B.S.A. SERVICE

(UNITED KINGDOM ONLY. ROYAUME UNI SEULEMENT, NUR VEREINIGTES KÖNIGREICH, REINO UNIDO SOLO)

When you purchase a B.S.A. machine you become the owner of a product which is backed by the most comprehensive motor cycle service in the world. The following notes are intended to give a guide to the facilities to the B.S.A. owner. Detailed information on any aspect of B.S.A. service may be obtained by discussion with your B.S.A dealer or on application to the factory Service Department.

REPLACEMENT PARTS

The moderate price at which B.S.A. replacement parts are available, has been maintained by making full use of trade distribution channels, with the consequent advantages of large consignments delivered from the works with lower handling, packing and transport costs. For this reason, we do not normally supply spares direct to individual owners, and all requests for replacement parts should be made to your local dealer or spare parts stockist. All B.S.A. dealers carry stocks of B.S.A. replacement parts, but the officially appointed spare parts stockists, whose names and addresses are quoted in the following pages, maintain an extensive and comprehensive range. B.S.A. owners are strongly advised to fit genuine B.S.A. replacement parts only. Risks are incurred in not always insisting on the genuine component, and these risks are eliminated if parts are purchased only from our recognised dealers.

B.S.A. EXCHANGE REPLACEMENT SERVICE

The B.S.A. Exchange Replacement Service is of great value to all B.S.A. owners. It is particularly useful to those who rely on their machines for daily transport, and who cannot afford to have them off the road for more than a few hours at a time. Under this scheme the owner can exchange any worn or otherwise unserviceable unit, such as engine, gearbox, forks or wheels, for a fully-guaranteed factory-assembled replacement unit. These units are ready for immediate use, and are supplied at fixed prices on the understanding that the old units which they replace are not damaged to a degree where they are not capable of being reconditioned.

All genuine B.S.A. Exchange Replacement units carry the full three months warranty. Most B.S.A. dealers and officially appointed spare parts stockists are able to supply genuine exchange units from stock. If this cannot be done, they can obtain the unit for you quickly from the works, and make arrangements for it to be fitted to your machine, afterwards returning the old unit to us. In this way the machine need only be off the road long enough for the conversion to be made. Full details of this scheme can be obtained from your B.S.A. dealer, and an explanatory leaflet and price list will be sent upon reqnest to B.S.A. Service Department.

CORRESPONDENCE

We maintain a skilled staff to help you with any query, technical or otherwise which you may have concerning your B.S.A. machine. We are always anxious to help, and all corresponence should be addressed to us at:—

B.S.A. MOTOR CYCLES LIMITED, Service Department, Waverley Works, Birmingham 10.

REPAIRS

(1). All motor cycles, engines or components for repair should be consigned to the factory Service Department at the following address:—

B.S.A. MOTOR CYCLES LIMITED, Service Department, Waverley Works Birmingham 10

Full instructions must accompany all items sent to us for repair. If we are simply asked to overhaul a machine, all component parts will be completely dismantled and inspected, all worn parts will be renewed and the machine reassembled and tested to original inspection standards.

(2). When sending complete motor cycles, accessories such as windscreens, panniers, Club badges, tools and inflators, should be removed as they are liable to be damaged or lost in transit.

(3). It frequently happens that parts are forwarded to us which do not bear the senders name and address. Care in this respect will prevent delay and annoyance.

(4). All goods consigned to us must be sent carriage paid.

(5). Immediately we receive a part for repair, an acknowledgment and confirmation of your instructions is posted to you. If you have occasion to enquire by letter or telephone about the progress of the repairs, please follow the instructions printed on your form of acknowledgment.

SERVICE LITERATURE

An Instruction Book is supplied free of charge with each machine and contains all the information required for routine maintenance, and top overhaul. For the normal owner this book will cover all the work that is likely to undertake. Further copies of Instruction Books to cover all post-war and most pre-war models are available from the Service Department.

For the guidance of dealers and other skilled mechanics, the Service Department also issues Service Manuals to cover each model. These manuals contain detailed instructions for complete dismantling and overhaul, and describe the special tools and jigs which are necessary for this purpose. The B.S.A. owner who has considerable mechanical experience, and feels that he is competent to carry out this more skilled type of work may obtain a copy of the Service Manual for his machine from the Service Department.

Additional Instruction Books are priced 3/- plus 3d. postage, and the Service Manuals are 7/- plus 6d. postage, for each model. Full details of the machine should always be quoted.

HOURS OF BUSINESS

Our Service Department is open from 8 30 a.m. to 5.30 p.m. Monday to Friday, excepting holiday periods and we are pleased to see B.S.A. owners, and if necessary, to inspect and advise on the condition of their machines.

We cannot guarantee, however, to be able to service any machine if a call is made without an appointment, and even when calling by appointment, an owner should be prepared to leave his machine with us, in case the work cannot be completed on the same day.

A commissionaire is always on duty to receive machines brought to the Service Department by appointment, at any time of the day or night, on any day of the week, and similar arrangements are made for collection. Any machine delivered to us after hours should, however, be accompanied by full instructions in writing, together with the owner' name and address.

CATALOGUE OF

250 Star model C15 group

ISSUED BY

B.S.A. MOTOR CYCLES LTD.

Service Department, Waverley Works,
Birmingham, 10

TELEPHONE . . . BIRMINGHAM VICTORIA 3711
TELEGRAMS . . "SELSERV" BIRMINGHAM

B.S.A. MOTOR CYCLES LTD.

Registered Offices and Works: ARMOURY ROAD, BIRMINGHAM 11

Telephones: BIRMINGHAM VICTORIA 2381 *Telegrams and Cables:* "SELMOTO BIRMINGHAM"

Contractors to Her Majesty's Government, the War Office, the Admiralty, the Post Office, the Colonial and Foreign Governments.

1300-3

Printed in England May, 1961

1 14
2 15
3 16
4 17
5 18
6 19
7 20
8 21
9 22
10 23
11 24
12 25
13 26

COPY OF B.S.A. REPAIRS GUARANTEE.

COPIE DE LA GARANTIE B.S.A. RELATIVE A REPARATIONS.

Always use

Genuine B.S.A. Spares

1 14
2 15
3 16
4 17
5 18
6 19
7 20
8 21
9 22
10 23
11 24
12 25
13 26

SUFFIX NUMBERS TO BE USED TO IDENTIFY VARYING FINISHES.
CHIFFRES DE SUFFIXE A EMPLOYER POUR IDENTIFIER LES PRÉSENTATIONS VARIÉES.
NACHZAHLEN ZU BENUTZEN UM DIE VERSCHIEDENEN AUSFUHRÜNGEN ZU BEZEICHNEN.
CIFRAS ADICIONALES QUE SE EMPLEA PARA IDENTIFICAR LOS ACABADOS VARIOS.

When ordering components with varying finishes, please state finish required by adding the APPROPRIATE NUMBER TO PART NUMBER.

En commandant des pièces avec présentations différentes veuillez indiquer la présentation requise en ajoutant les chiffres appropriés au numéro de CATALOGUE DE LA PIECE.

Bei Bestellungen von Teilen mit verschiedenen Ausfuhrüngen bitte die Erwünschte Ausfuhrung mit Angabe der entsprechenden Nachzahl nach dem TEILNUMMER BEZEICHNEN.

Al pedir piezas con acabados differentes sírvase indicar el acabado requirdo mediante la cifra relativa escrita después del NUMERO DE CATALOGO DE LA PIEZA.

EXAMPLE. Standard Model, Petrol Tank, Devon Red, 1 **83** 40–8004./034

EXEMPLE. Réservoir d'essence, Alizarine Carminée 1 **83** 40–8004./034

BEISPIEL. Benzintank, Alizarinkarmin 1 **83** 40–8004./034

EJEMPLO. Deposito de combustible, Carmin de Alizarina 1 **83** 40–8004./034

MODELS AND COMPONENTS WITH VARIOUS FINISHES
MODELES ET PIECES AVEC PRESENTATIONS VARIEES
MODELLE UND TEILE VERSCHIEDENER AUSFUHRUNGEN
MODELOS Y PI AS CON ACABADOS DIFERENTES

Description Designation Beschriebung Descripción	Model Modèle Typen Modelos	Model Modèle Typen Modelos	Model Modèle Typen Modelos	Model Modèle Typen Modelos
	C15 Standard C15 Montante	C15 Competition	C15 Standard, American type C15 Standard, type American C15 Standard, Amerikanischen Typs. C15 Standard, tipo Americano	C15 Starfire Scrambler C15 Road Scrambler
Frame **Cadre** **Rahmen** **Cuadro**	Black ... /007 Noir ... /007 Schwarz ... /007 Negro ... /007	Black ... /007 Noir ... /007 Schwarz ... /007 Negro ... /007	Black ... /007 Noir ... /007 Schwarz ... /007 Negro ... /007	Black ... /007 Noir ... /007 Schwarz ... /007 Negro ... /007
Front Fork **Fourche av** **Vordergabel** **Horquilla del.**	Black ... /007 Noir ... /007 Schwarz ... /007 Negro ... /007	Black ... /007 Noir ... /007 Schwarz ... /007 Negro ... /007	Black ... /007 Noir ... /007 Schwarz ... /007 Negro ... /007	Black ... /007 Noir ... /007 Schwarz ... /007 Negro ... /007
Petrol Tank **Rèsevoir d'essence** **Benzintank** **Deposito de combustible**	Devon Red ... /034 Alizarine carminée ... /034 Alizarinkarmin ... /034 Carmin de alizarina ... /034 *Metallic Almond Green ... /100 *Vert metallique ... /100 *Metallisches Grün ... /100 *Verde metalico ... /100	Blue and Chrome ... /110 Blue de cobalt et chrome ... /110 Kobaltblau und Chrome ... /110 Azul de cobalto y chrome ... /110	Blue and Ivory ... /145 Blue de cobalt et blancode plomb/145 Kobaltblau und Bleiweiss ... /145 Azul de cobalto y blanco de plomo ... /145	Blue and Chrome ... /110 Blue de cobalt et chrome /110 Kobaltblau und Chrome ... /110 Azul de cobalto y chrome /110
Mudguards **Gardeboue** **Schutzbleche** **Guardabarros**	Devon Red ... /034 Alizarine carminée ... /034 Alizarinkarmin ... /034 Carmin de alizarina ... /034	Sapphire Blue ... /088 Bleu de cobalt ... /088 Kobaltblau ... /088 Azul de cobalto ... /088 *Chrome ... /003 *Chrome ... /003 *Chrome ... /003 *Chrome ... /003	Blue with double lining ... /112 Décorée de deau fils d'or ... /112 Mit zwei goldlinien verziert ... /112 Decorada de un filo doble de oro /112	Chrome ... /003 Chrome ... /003 Chrome ... /003 Chrome ... /003
Oil Tank **Rèsevoir d'huile** **Öltank** **Deposito de aceite**	Devon Red ... /034 Alizarine carnmiée ... /034 Alizarinkarmin ... /034 Carmin de alizarina ... /034	Black ... /007 Noir ... /007 Schwarz ... /007 Negro ... /007	Sapphire Blue ... /088 Bleu de cobalt ... /088 Kobaltblau ... /088 Azul de cobalto ... /088	Black ... /007 Noir ... /007 Schwarz ... /007 Negro ... /007
Toolbox **Boite à outils** **Werkzeugkasten** **Caja de herramientos**	Devon Red ... /034 Alizarine carminée ... /034 Alizarinkarmin ... /034 Carmin de alizarina ... /034	Black ... /007 Noir ... /007 Schwarz ... /007 Negro ... /007	Sapphire Blue ... /088 Bleu de cobalt ... /088 Kobaltblau ... /088 Azul de cobalto ... /088	Black ... /007 Noir ... /007 Schwarz ... /007 Negro ... /007

*Indicates alternative finishes. *Indique des presentations alternatives. *Bezeichnet Wahlweise Ausführungen. *Indica acabdos alternatives.

PISTON CHART
TABLEAU DES PISTONS
KOLBENTABELLE
GRAFICO DE EMBOLAS

		PISTON COMPLETE PISTON COMPLET KOLBEN KOMPLETT EMBOLO COMPLETA			PISTON RING SEGMENT KOLBENRING SEGMENTO			PISTON RING (bottom) SEGMENT (inférieure) KOLBENRING (Unten) SEGMENTO (inferior)		
Model Modèle Typen Modelos	Compression Ratio Taux de compression Kompression Compresión	Standard Standard Standard Montante	+ ½mm.	+1 mm.	Standard Standard Standard Montante	+½ mm.	+1 mm.	Standard Standard Standard Montante	+½ mm.	+1 mm.
C15 Standard	7.5	1 46 40-0258	1 46 40-0260	1 46 40-0262	Plain 1 16 40-0086 Taper 1 22 40-0095	Plain 1 16 40-0087 Taper 1 22 40-0096	Plain 1 16 40-0088 Taper 1 22 40-0097	1 17 40-0090	1 17 40-0091	1 17 40-0092
C15 Standard	8.5	1 47 40-0264	1 47 40-0266	1 47 40-0268	Plain 1 16 40-0086 Taper 1 22 40-0095	Plain 1 16 40-0087 Taper 1 22 40-0096	Plain 1 16 40-0088 Taper 1 22 40-0097	1 17 40-0090	1 17 40-0091	1 17 40-0092
C15 Trials	6.4	1 49 40-0341	1 49 40-0343	1 49 40-0345	Plain 1 16 40-0086 Taper 1 22 40-0095	Plain 1 16 40-0087 Taper 1 22 40-0096	Plain 1 16 40-0088 Taper 1 22 40-0097	1 17 40-0090	1 17 40-0091	1 17 40-0092
C15 Scrambles	9.0	1 51 40-0347	1 51 40-0349	1 51 40-0351	Plain 1 16 40-0086 Taper 1 22 40-0095	Plain 1 16 40-0087 Taper 1 22 40-0096	Plain 1 16 40-0088 Taper 1 22 40-0097	1 17 40-0090	1 17 40-0091	1 17 40-0092
C15 Scrambles*	10.0	1 51 40-0444	1 51 40-0446	1 51 40-0448	Plain 1 16 40-0086 Taper 1 22 40-0095	Plain 1 16 40-0087 Taper 1 22 40-0096	Plain 1 16 40-0088 Taper 1 22 40-0097	1 17 40-0090	1 17 40-0091	1 17 40-0092
C15 American Type	8.0	1 49 40-0359	1 49 40-0361	1 49 40-0363	Plain 1 16 40-0086 Taper 1 22 40-0095	Plain 1 16 40-0087 Taper 1 22 40-0096	Plain 1 16 40-0088 Taper 1 22 40-0097	1 17 40-0090	1 17 40-0091	1 17 40-0092
C15 Road Scrambler	9.0	1 51 40-0347	1 51 40-0349	1 51 40-0351	Plain 1 16 40-0086 Taper 1 22 40-0095	Plain 1 16 40-0087 Taper 1 22 40-0096	Plain 1 16 40-0088 Taper 1 22 40-0097	1 17 40-0090	1 17 40-0091	1 17 40-0092
C15 Starfire Scrambler	10.0	1 51 40-0444	1 51 40-0446	1 51 40-0448	Plain 1 16 40-0086 Taper 1 22 40-0095	Plain 1 16 40-0087 Taper 1 22 40-0096	Plain 1 16 40-0088 Taper 1 22 40-0097	1 17 40-0090	1 17 40-0091	1 17 40-0092

CARBURETTER SETTINGS
REGLAGE DU CARBURATEUR
VERGASEREINSTELLUNG
AJUSTE DEL CARBURADOR

AMAL LTD., HOLFORD ROAD, WITTON, BIRMINGHAM, ENGLAND.

Model Modèle Typen Modelos	Spares No. No. de pièce Ersatzteil-nr No. de repuesto	Makers No. No. du fabricant Nr-Hersteller No. fabricante	Main Jet Gicleur principal Hauptdüse Surtidor principal	Pilot Jet Gicleur du depositif de ralenti Leerlaufdüse Surtidor piloto	Throttle Valve Boisseau des gaz Gassscheiber Corredera de aceleración	Needle Position Position de l'aiguille Nadelstellung Pos. aguja	Needle Jet Gicleur d'aguille Nadeldüse Surtidor de aguja	Choke Size Dimension de la buse Grösse des Einlassquerschnitt Entrada de aire
C15 Standard, Trials	87140–318	375/34	140	25	375/4	3	.1055	⅞″
C15 Star U.S.A.	87340–460	376/270	180	25	376/3½	3	.1065	1″
C15 Scrambles	87340–423	376/222	180	25	376/3	2	.1055	15/16″
C15 Scrambles*	87340–442	376/258	240	25	376/3½	2	.1065	1-1/16″

*Fitted on and after Engine number C15S–2001.
*Montée depuis moteur numéro C15S–2001.
*Nach Motornummer C15S–2001 Montiert.
*Montada depués d emotor numero C15S–2001.

ASSEMBLIES COMPLETE
ENSEMBLE COMPLET
TEILE-MONTAGE KOMP
ASEMBLI COMPLETA

Model Modèle Typen Modelos	Spares No. No. de pièce Ersatzteil-nr No. de repuesto	Description	Designation	Beschreibung	Descripción
C15	40–0001	Engine and garbx complete less Carburetter.	Moteur et boîte de vitesses sans carburateur.	Motor und Getriebe Ohne Vergaser	Motor y caja de velocidades sin carburador.
C15 Scrambles, (High Compression	40–0439	Engine and Gearbox complete less Carburetter.	Moteur et boîte de vitesses sans carburateur.	Motor und Getriebe Ohne Vergaser	Motor y caja de velocidades sin carburador.
C15 Trials ... ... C15 Scrambles (1960)	40–0002	Engine and Gearbox complete less Carburetter.	Moteur et boîte de vitesses sans carburateur.	Motor und Getriebe Ohne Vergaser	Motor y caja de velocidades sin carburador.
C15 Starfire Roadster, C15 Scrambles (1961)	40–0503	Engine and Gearbox complete less Carburetter.	Moteur et boîte de vitesses sans carburateur.	Motor und Getreibe Ohne Vergaser	Motor y caja de velocidades sin carburador.
C15 Starfire Scrambler	40–0502	Engine and Gearbox complete less Carburetter.	Moteur et boîte de vitesses sans carburateur.	Motor und Getriebe Ohne Vergaser	Motor caja de velocidades sin carburador.
C Group	1 80 40–0484	Crankcase Driveside and Gearside complete.	Carter de vilebrequin — droite et gauche.	Kurbelgehäuse — Rechts und Links	Caja de ciguëñal — der. y izq.
C15	1 78 40–0401	Flywheel Assembly complete	Vilebrequin complet	Kurbelwelle Komplett	Ciguëñal completa
C15 Trials	1 74 40–0406	Flywheel Assembly complete	Vilebrequin complet	Kurbelwelle Komplett	Ciguëñal completa
C15 Starfire Scrambler, C15 Starfire Roadster, C15 Scrambles (1961)	1 81 40–0504	Flywheel Assembly complete	Vilebrequin complet	Kurbelwelle Komplett	Ciguëñal completa
C Group	1 82 40–3200	Clutch complete	Embrayage complet	Kupplung Komplett	Embrague completa
C15 Starfire Scrambler, C15 Starfire Roadster, C15 Scrambles	1 82 40–3235	Clutch complete	Embrayage complet	Kupplung Komplett	Embrague completa
C15	1 45 40–0408	Connecting Rod Big End Assembly.	Bielle et maneton de vilebrequin complet.	Pleuelstange und Kurbelzapfen Komplett.	Varilla de acoplamiento y codo del ciguëñal.
C15 Starfire Scrambler, C15 Starfire Roadster, C15 Scrambles (1961)	1 45 40–0516	Connecting Rod Big End Assembly.	Bielle et maneton de vilebrequin complet.	Pleuelstange und Kurbelzapfen Komplett.	Varilla de acoplamiento y codo del ciguëñal.
C15	1 92 40–4013	Frame complete with Central Stand.	Cadre complet avec béquille centrale	Rahmen Komplett mit Mittelständer.	Cuadro completa con muleta
C15 Competition ...	1 92 40–4094	Frame complete	Cadre complet	Rahmen Komplett	Cuadro completa
C15	1 89 40–5001	Front Fork complete	Fourche av complet	Vordergabel Komplett	Horquilla del completa
C15 Trials, C15 Starfire Roadster, C15 Starfire Scrambler	1 96 40–5070	Front Fork complete (Headlamp fitting).	Fourche av complet	Vordergabel Komplett	Horquilla del completa
C15 Scrambles, C15 Trials	1 96 40–5071	Front Fork complete (less Headlamp fitting).	Fourche av complet	Vordergabel Komplett	Horquilla del completa
C15	1 84 40–5500	Front Wheel with Spindle and Bearings.	Roue av complet	Vorderrad Komplett	Rueda delantera completa
C15 Competition ...	1 84 40–5536	Front Wheel with Spindle and Bearings.	Roue av complet	Vorderrad Komplett	Rueda delantera completa

ASSEMBLIES COMPLETE
ENSEMBLE COMPLET
TEIL-MONTAGE KOMP
ASEMBLI COMPLETA

Model: Modèle; Typen Modelos	Spares No. No. de pièce Ersatzteil-nr No. de repuesto	Description	Designation	Beschreibung	Descripción
C15	1 76 40-5501	Front Hub with Spindle and Bearings.	Moyeu de roue av complet	Vorderradnabe Komplett	Cuebo de rueda delantera completa
C15	1 83 40-6000	Rear Wheel with Spindle and Bearings.	Roue ar complet	Hinterrad Komplett	Rueda trasera completa
C15	1 75 40-6001	Rear Hub with Spindle and Bearings.	Moyeu de roue ar complet	Hinterradnabe Komplett	Cuebo de rueda trasera completa
C15 Trials	1 83 40-6060	Rear Wheel with Spindle and Bearings.	Roue ar complet	Hinterrad Komplett	Rueda trasera completa
C15 Scrambles ...	1 83 40-6061	Rear Wheel with Spindle and Bearings.	Roue ar complet	Hinterrad Komplett	Rueda trasera completa
C15 Competition ...	*1 74 40-6059	Rear Hub with Spindle and Bearings.	Moyeu de roue ar complet	Hinterradnabe Komplett	Cuebo de rueda trasera compleat
C15 (Sidecar) ...	1 81 40-6002	Rear Wheel with Spindle and Bearings.	Roue ar complet	Hinterrad Komplett	Rueda trasera completa
C15 (Sidecar) ...	1 75 40-6003	Rear Hub with Spindle and Bearings.	Moyeu de roue ar complet	Hinterradnabe Komplett	Cuebo de rueda trasera completa
C15	1 65 41-4851	Front Safety Bar Assembly	Parachoc av monté	Stürzbogen — Zusammen Gebaut	Defensa delantera montada
C15	1 62 40-4901	Rear Safety Bar Assembly	Ensemble de parachoc ar	Hinterer Stürzbogen — Komplett	Conjunto de defensa trasera
C15	1 64 40-7210	Legshield Assembly	Protège-jambes complet	Beinschutz Komplett	Guardapiernas completa
C15	* 1 77 40-7211	Legshield and Safety Bar Assembly.	Protège-jambes et pare-chocs complet.	Beinschutz und Stürzbogen Komplett.	Guardabarros y defensas completa.

40-5070	Cowl fitting for Headlamp.	40-5070	Pour phare.	40-5070	Für Scheinwerfer.	40-5070	Para faro.
40-5071	Less Cowl fitting.	40-5071	Sans accessoire pour phare.	40-5071	Ohne Befestigung für Scheinwerfer.	40-5071	Sin accessorio para faro.
40-6002	Sidecar.	40-6002	Side-car.	40-6002	Beiwagen.	40-6002	Sidecar.
40-6003	Sidecar.	40-6003	Side-car.	40-6003	Beiwagen.	40-6003	Sidecar.

INDEX, GRUPPEVERZEICHNIS, INDICE
Group, Groupe, Gruppe, Grupo 1-13

Cylinder Head Exhaust Pipe	Culasse Tuyau d'echappement	Zylinderkopf Auspufrohr	Culata Tubo de escape	1
Cylinder & Crankshaft Group	Groupe de cylindre et de vilebrequin.	Zylinder-und Kurbelwellegruppe	Grupo de cilindro y de ciguëñal.	2
Crankcase Alternator Oil Pump	Carter de vilebrequin Alternateur Pompe à huile	Kurbelgehäuse Lichtmaschine Ölpumpe	Caja de ciguëñal Alternador Bomba de aceite	3
Gear Cluster	Jeu d'engrenages	Zahnradsatz	Juego de engranajes	4
Footstart & Footchange	Kickstarter et selecteur au pied	Kickstart und Fussschaltung	Arrancador y cambio de pie	5
Gearchange Mechanism	Mécanisme de changement de vitesse.	Schaltung	Cambio	6
Clutch	Embrayage	Kupplung	Embrague	7
Frame Brake Pedal Battery Holder	Cadre Pédale de frein Support de batterie	Rahmen Fussbremshebel Batteriehalter	Cuadro Pedal de freno Porta-bateria	8
Frame Brake Pedal	Cadre Pédale de frein	Rahmen Fussbremshebel	Cuadro Pedal de freno	9
Swinging Arm Footrests	Bras oscillant Repose-pied	Schwingarm Fussraste	Horquilla oscillant Descansa-pie	10
Swinging Arm Shock Absorber	Bras oscillant Amortisseur	Schwingarm Stossdämpfer	Horquilla oscillant Amortiguador	11
Oil Tank Toolbox Cover Plate	Réservoir d'huile Boîte à outils Plaque couvercle	Öltank Werkzeugkasten Abdeckplatte	Deposito de aceite Caja de herrimentos Tapa del cojinete	12
Oil Tank Air Filter	Réservoir d'huile Filtre à air	Öltank Luftfilter	Deposito de aceite Filtro de aire	13

INDEX, GRUPPEVERZEICHNIS, INDICE

Group, Groupe, Gruppe, Grupo 14-26

Front Fork	Fourche av	Vordergabel	Horquilla del.	14
Front Fork	Fourche av	Vordergabel	Horquilla del.	15
Front Wheel	Roue av	Vorderrad	Rueda delantera	16
Rear Wheel	Roue ar	Hinterrad	Rueda trasera	17
Mudguards Chainguard	Garde-boue Carter de chaîne	Schutzbleche Kettenschutz	Guardabarros Guardacadena	18
Mudguards Chainguard	Garde-boue Carter de chaîne	Schutzbleche Kettenschutz	Guardabarros Guardacadena	19
Petrol Tank Handlebar Silencer	Réservoir d'essence Guidon Silencieux	Benzintank Lenker Schalldämpfer	Deposito de combustible Manillar Silenciador	20
Petrol Tank Silencer	Réservoir d'essence Silencieux	Benzintank Schalldämpfer	Deposito de combustible Silenciador	21
Handlebar Dual Seat	Guidon Selle double	Lenker Doppelsitz	Manillar Asiento doble	22
Legshields Carrier Handrail	Protege-jambes Porte-bagages Poignée	Beinschutz Gepäckträger Haltergriff	Guardapiernas Porta-equipaje Puño	23
Legshields Safety Bars	Protege-jambes Pare-chocs	Beinschutz Sturzbügel	Guardapiernas Baras de seguridad	24
Tools	Outils	Werkzeuge	Herramientos	25
Electrical Equipment	Equipement electrique	Elektr., Ausrüstung	Equipo electrico	26

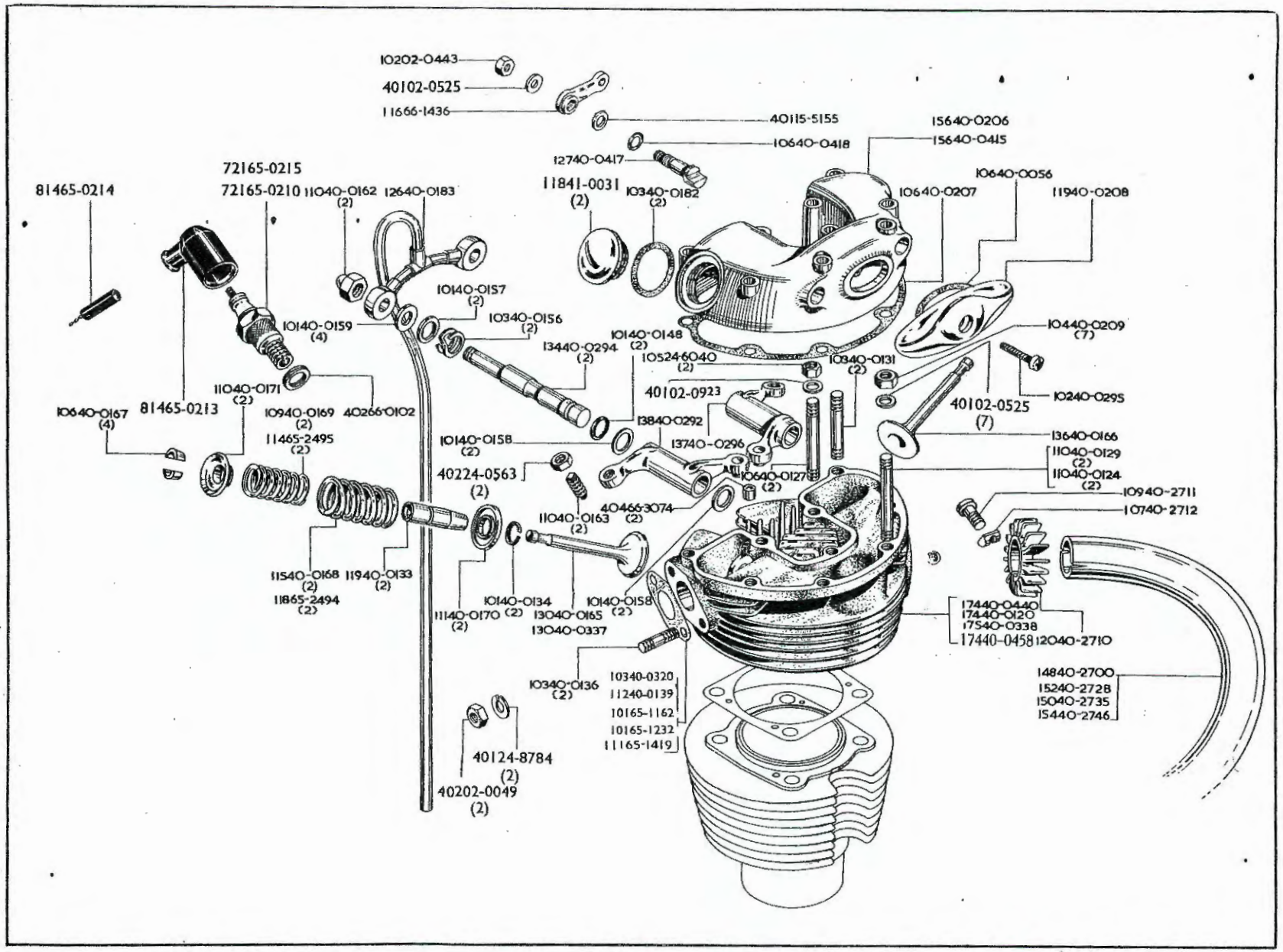
10202-0443
40102-0525
11666-1436
40115-5155
10640-0418
12740-0417
15640-0206
15640-0415
10640-0056
10640-0207
11940-0208
81465-0214
72165-0215
72165-0210
11040-0162 (2)
12640-0183
11841-0031 (2)
10340-0182 (2)
10140-0157 (2)
10140-0159 (4)
10340-0156 (2)
10140-0148 (2)
13440-0294 (2)
10524-6040 (2)
10340-0131 (2)
10440-0209 (7)
11040-0171 (2)
40102-0923
10240-0295
40102-0525 (7)
10640-0167 (4)
81465-0213
10940-0169 (2)
40266-0102
13840-0292
13740-0296
13640-0166
11465-2495 (2)
10140-0158 (2)
11040-0129 (2)
11040-0124 (2)
40224-0563 (2)
10640-0127 (2)
10940-2711
10740-2712
11040-0163 (2)
40466-3074 (2)
11540-0168 (2)
11865-2494 (2)
11940-0133 (2)
10140-0134 (2)
10140-0158 (2)
11140-0170 (2)
13040-0165
13040-0337
17440-0440
17440-0120
17540-0338
17440-0458
12040-2710
10340-0136 (2)
10340-0320
11240-0139
10165-1162
10165-1232
11165-1419
14840-2700
15240-2728
15040-2735
15440-2746
40124-8784 (2)
40202-0049 (2)

CYLINDER HEAD
CULASSE
ZYLINDERKOPF
CULATA

EXHAUST PIPES
TUYAU D'ÉCHAPPEMENT
AUSPUFROHR
TUBO DE ESCAPE

Model Modèle Typen Modelos	Spares No. No. de pièce Ersatzteil-nr No. de repuesto	Description	Designation	Beschreibung	Descripción	Per Set Par jeu Pr. Satz Juego de
C Group	4 02 02–0049	Nut	Ecrou	Mutter	Tuerca	2
C15 Trials, Scrambles	1 02 02–0443	Nut	Ecrou	Mutter	Tuerca	
C Group	4 01 02–0525	Washer	Rondelle	Scheibe	Arandela	8
C15 Trials, Scrambles	4 01 02–0525	Washer	Rondelle	Scheibe	Arandela	8
C Group	4 01 02–0923	Washer	Rondelle	Scheibe	Arandela	2
C15 Trials, Scrambles	4 01 15–5155	Washer	Rondelle	Scheibe	Arandela	
C Group	4 02 24–0563	Nut	Ecrou	Mutter	Tuerca	2
C Group	1 05 24–6040	Nut	Ecrou	Mutter	Tuerca	2
C Group	4 01 24–8784	Lockwasher	Rondelle frein	Sicherungsscheibe	Freno	2
C Group	1 06 40–0056	Sealing Washer	Joint d'étanchéité	Dichtung	Arandela de reten	
C15 Standard & Trials	1 74 40–0120	Cylinder Head	Culasse	Zylinderkopf	Culata	
C Group	1 10 40–0124	Stud	Goujon	Stehbolzen	Esparago	2
C Group	1 06 40–0127	Stud	Goujon	Stehbolzen	Esparago	2
C Group	1 10 40–0129	Stud	Goujon	Stehbolzen	Esparago	3
C Group	1 03 40–0131	Stud	Goujon	Stehbolzen	Esparago	2
C Group	1 19 40–0133	Valve Guide	Guide de soupape	Ventilfuhrüng	Guia de valvula	2
C Group	1 01 40–0134	Circlip	Arrêtoir	Sprengring	Freno	2
C Group	1 03 40–0136	Stud	Goujon	Stehbolzen	Esparago	2
C Croup	1 01 40–0148	"O" Ring	Bague "O"	"O" Ring	Anillo "O"	2
C Group	1 03 40–0156	Spring	Ressort	Feder	Resorte	2
C Group	1 01 40–0157	Washer	Rondelle	Scheibe	Arandela	2
C Group	1 01 40–0158	Washer	Rondelle	Scheibe	Arandela	4
C Group	1 01 40–0159	Washer	Rondelle	Scheibe	Arandela	4
C Group	1 10 40–0162	Nut	Ecrou	Mutter	Tuerca	2
C Group	1 10 40–0163	Screw	Vis	Schraube	Tornillo	2
C15 Standard & Trials	1 30 40–0165	Inlet Valve	Soupape d'admission	Einlassventil	Válvula de admisión	
C Group	1 36 40–0166	Exhaust Valve	Soupape d'échappement	Auslassventil	Vávlula de escape	
C Group	1 06 40–0167	Collet	Collet	Keil	Refuerzo del cilindro	4
C Group	1 15 40–0168	Spring	Ressort	Feder	Resorte	2
C Group	1 09 40–0169	Spring	Ressort	Feder	Resorte	2
C Group	1 11 40–0170	Cup	Cuvette	Schale	Copa	2
C Group	1 10 40–0171	Collar	Bague d'arrêt	Stellring	Anillo móvil aprisionado	2
C Group	1 03 40–0182	Washer	Rondelle	Scheibe	Arandela	

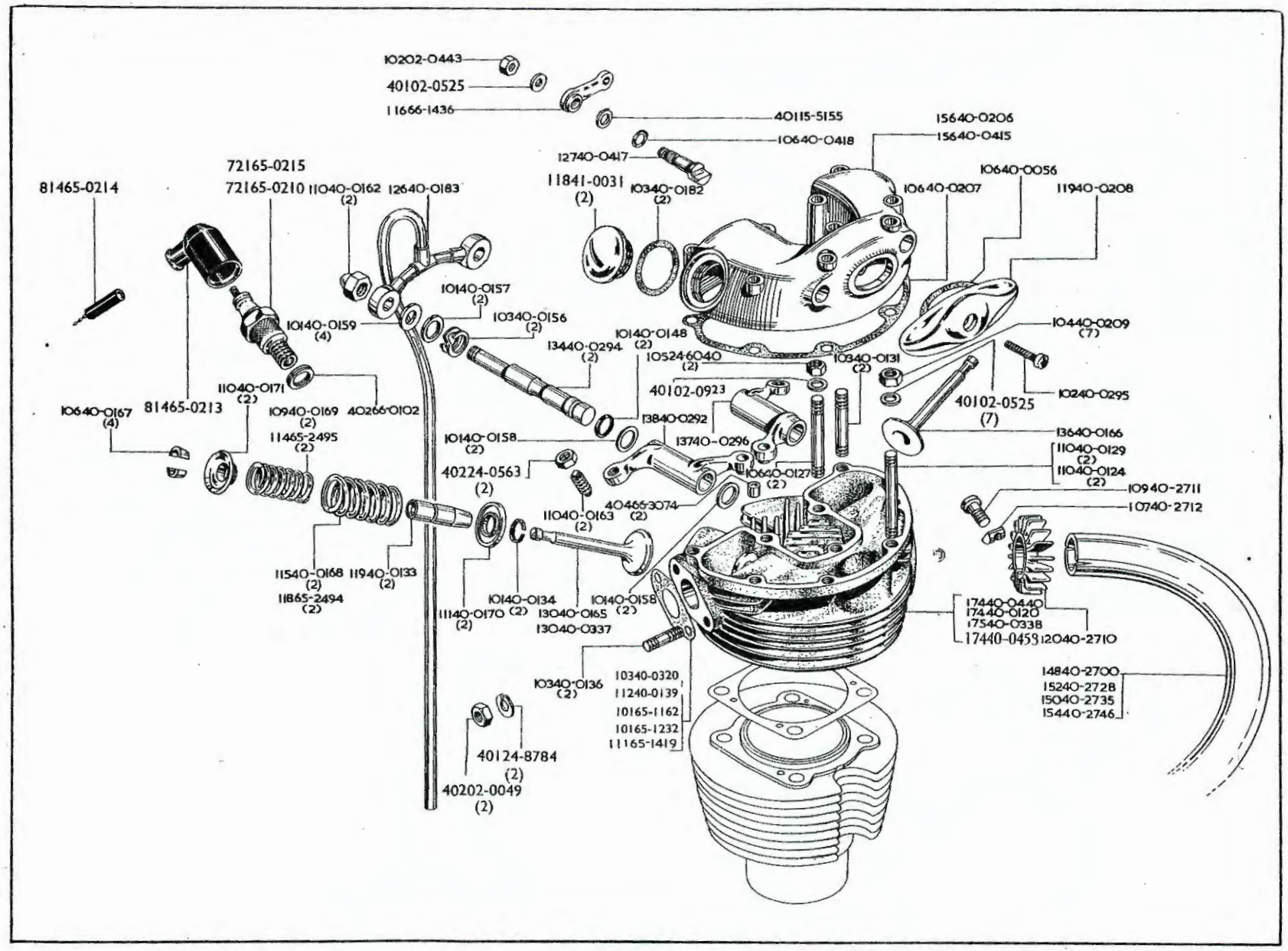
10202-0443
40102-0525
11666-1436
40115-5155
10640-0418
12740-0417
15640-0206
15640-0415
10640-0056
11940-0208
10640-0207
11841-0031 (2)
10340-0182 (2)
81465-0214
72165-0215
72165-0210
11040-0162 (2)
12640-0183
10140-0157 (2)
10340-0156 (2)
10140-0159 (4)
13440-0294 (2)
10140-0148 (2)
10524-6040 (2)
10340-0131 (2)
10440-0209 (7)
10240-0295
40102-0923
40102-0525 (7)
11040-0171 (2)
10640-0167 (4)
81465-0213
10940-0169 (2)
40266-0102
11465-2495 (2)
13840-0292
13740-0296
13640-0166
10140-0158 (2)
11040-0129 (2)
11040-0124 (2)
40224-0563 (2)
10640-0127 (2)
10940-2711
10740-2712
40466-3074 (2)
11040-0163 (2)
11540-0168 (2)
11940-0133 (2)
11865-2494 (2)
10140-0134 (2)
11140-0170 (2)
13040-0165
13040-0337
10140-0158 (2)
17440-0440
17440-0120
17540-0338
17440-0459
12040-2710
10340-0136 (2)
10340-0320
11240-0139
10165-1162
10165-1232
11165-1419
14840-2700
15240-2728
15040-2735
15440-2746
40124-8784 (2)
40202-0049 (2)

CYLINDER HEAD
CULASSE
ZYLINDERKOPF
CULATA

EXHAUST PIPES
TUYAU D'ÉCHAPPEMENT
AUSPUFROHR
TUBO DE ESCAPE

Model Modèle Typen Modelos	Spares No. No. de pièce Ersatzteil-nr No. de repuesto	Description	Designation	Beschreibung	Descripción	Per Set Par jeu Pr. Satz Juego de
C Group	1 26 40–0183	Oil Feed Pipe	Tuyauterie d'alimentation d'huile	Ölzufuhrleitung	Tubo de alimentación de aceite	
C15 Standard ...	1 56 40–0206	Rocker Box	Boîtier des culbuteurs	Kipphebelgehäuse	Carter de los brazos oscilantes	
C Group	1 06 40–0207	Sealing Washer	Joint d'étanchéité	Dichtung	Arandela de reten	
C Group	1 19 40–0208	Cover	Couvercle	Schutzkappe	Tapa	
C Group	1 04 40–0209	Nut	Ecrou	Mutter	Tuerca	7
C Group	1 38 40–0292	Inlet Rocker	Culbuteur-admission	Einlasskipphebel	Brazo osc. admisión	
C Group	1 34 40–0294	Spindle	Arbre	Welle	Arbol	2
C Group	1 02 40–0295	Screw	Vis	Schraube	Tornillo	
C Group	1 37 40–0296	Exhaust Rocker	Culbuteur-échappement	Auslasskipphebel	Brazo osc. escape	
C15 Scrambles ...	1 16 40–0319	Gasket (Tufnol)	Joint (Tufnol)	Dichtung (Tufnol)	Empaquetadura (Tufnol)	
C Group	1 10 40–0320	Gasket (Tufnol)	Joint (Tufnol)	Dichtung (Tufnol)	Empaquetadura (Tufnol)	
C15 Scrambles ...	1 30 40–0337	Inlet Valve	Soupape d'admission	Einlassventil	Válvula de admisión	
C15 Scrambles ...	1 75 40–0338	Cylinder Head	Culasse	Zylinderkopf	Culata	
C15 Trials, Scrambles	1 56 40–0415	Rocker Box	Boîtier des culbuteurs	Kipphebelgeeäuse	Carter de los brazos oscilantes	
C15 Trials, Scrambles	1 27 40–0417	Exhaust Valve Lifter	Poussior de soupape d'échappement.	Auslassventilstössel	Levanta valvula-escape	
C15 Trials, Scrambles	1 06 40–0418	"O" Ring	Bague "O"	"O" Ring	Anillo "O"	
C15 Scrambles ...	1 74 40–0440*	Cylinder Head	Culasse	Zylinderkopf	Culata	
C15 Star (1961)	1 74 40–0458	Cylinder Head (American type).	Culasse (type American)	Zylinderkopf (Amerikanischen Typs).	Culata (tipo Americano)	
C15 Standard ...	1 48 40–2700	Exhaust Pipe	Tuyau d'échappement	Auspuffrohr	Tubo de escape	
C15 Standard ...	1 20 40–2710	Collar	Bague d'arrêt	Stellring	Anillo móvil aprisionado	
C15 Standard ...	1 09 40–2711	Screw	Vis	Schraube	Tornillo	
C15 Standard ...	1 07 40–2712	Nut	Ecrou	Mutter	Tuerca	
C15 Trials, Starfire Roadster	1 52 40–2728	Exhaust Pipe (American type).	Tuyau d'échappement (type American).	Auspuffrohr (Amerikanischen Typs).	Tubo de escape (tipo Americano).	
C15 Trials	1 52 40–2728	Exhaust Pipe	Tuyau d'échappement	Auspuffrohr	Tubo de escape	
C15 Scrambles ...	1 50 40–2735	Exhaust Pipe	Tuyau d'échappement	Auspuffrohr	Tubo de escape	
C15 Starfire Scrambler (1961)	1 54 40–2746	Exhaust Pipe	Tuyau d'échappement	Auspuffrohr	Tubo de escape	
C Group	1 18 41–0031	Cap	Chapeau	Abdeckappe	Tapon	2
C15 Standard & Trials	7 21 65–0210	Spark Plug	Bougie d'allumage	Zündkerze	Bujía	
C Group	8 14 65–0213	Cover	Couvercle	Schutzkappe	Tapa	
C Group	8 14 65–0214	Suppressor	Depositif antiparasite	Entstoerter Kabelschuh	Supresor	
C15 Scrambles ...	7 21 65–0215	Spark Plug	Bougie d'allumage	Zündkerze	Bujía	
C15 Star	7 21 65–0215	Spark Plug	Bougie d'allumage	Zündkerze	Bujía	
C15 Scrambles ...	1 01 65–1162	Washer (paper)	Joint (papier)	Dichtung (Papier)	Empaquetadura (papel)	
C15 Scrambles ...	1 01 65–1232*	Washer (paper)	Joint (papier)	Dichtung (Papier)	Empaquetadura (papel)	
C15 Scrambles ...	1 11 65–1419*	Gasket (Tufnol)	Joint (Tufnol)	Dichtung (Tufnol)	Empaquetadura (Tufnol)	
C15 Scrambles ...	1 18 65–2494*	Spring	Ressort	Feder	Rseorte	2
C15 Scrambles ...	1 14 65–2495*	Spring	Resort	Feder	Resorte	2
C Group	4 02 66–0102	Washer	Rondelle	Scheibe	Arandela	
C15 Trials, Scrambles	1 16 66–1436	Lever	Levier	Hebel	Palanca	
C Group	4 04 66–3074	Dowel	Goujon	Passtift	Pasador	
		*Fitted on and after Engine No. C15S 2001.	*Montée depuis moteur numéro C15S 2001.	*Nach Motornummer C15S2001 Montiert.	*Montada depués de motor numero C15S 2001.	

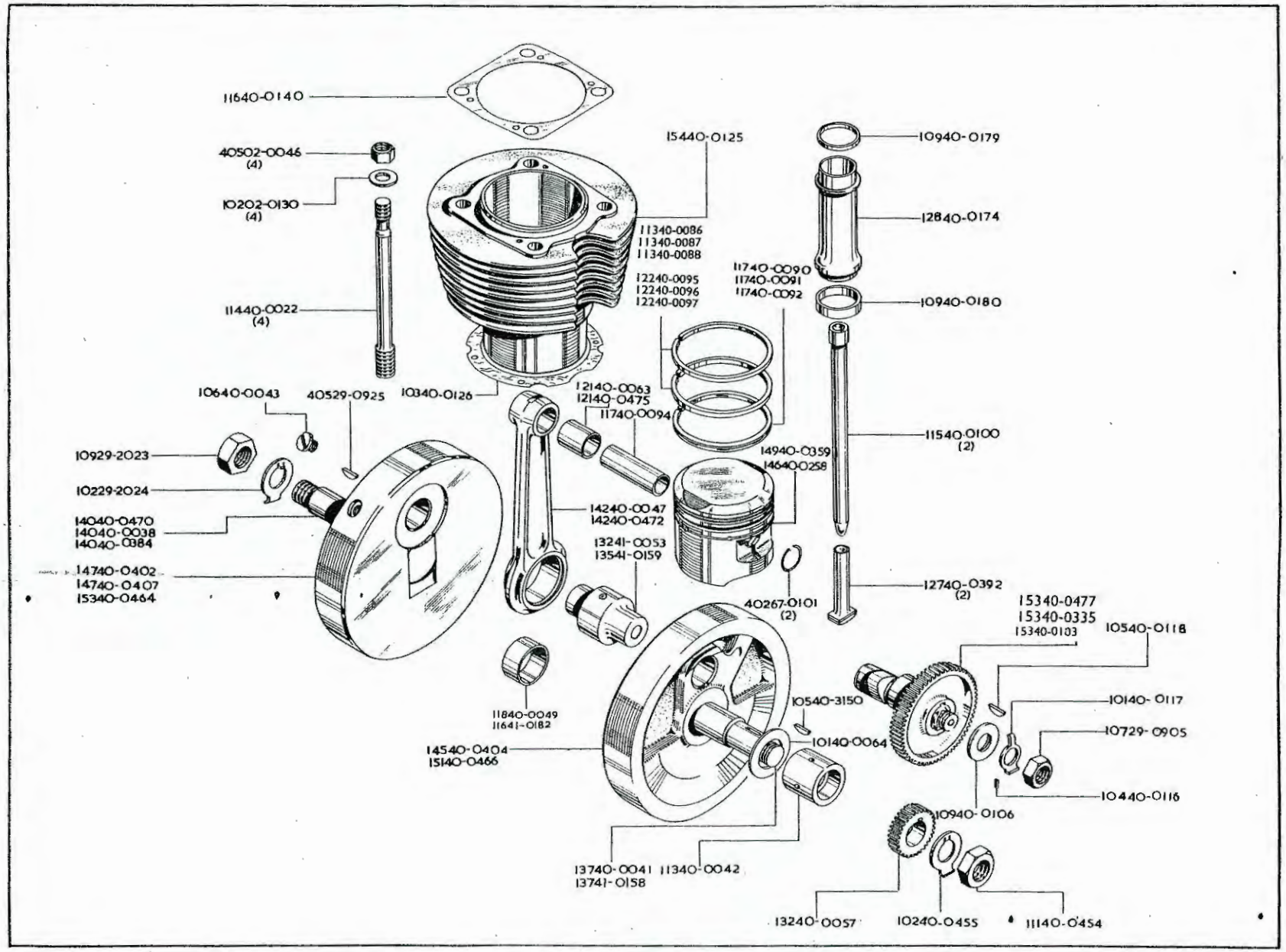

CYLINDER AND CRANKSHAFT GROUP

CYLINDER AND CRANKSHAFT GROUP
GROUPE DE CYLINDRE ET DE VILEBREQUIN
ZYLINDER UND KERBELWELLEGRUPPE
GRUPO DE CILINDRO Y DE CIGUENAL

Model Modèle Typen Modelos	Spares No. No. de pièce Ersatzteil-nr No. de repuesto	Description	Designation	Beschreibung	Descripción	Per Set Par jeu Pr. Satz Juego de
C Group	1 31 00–3118	Gasket Set complete	Pochette de joints complet	Satz Dichtungen	Juego de empaquetaduras comp.	
C Group	1 18 00–3119	Decoke Set	Jeu de joint pour décalaminage	Dichtungsatz für Zylinderkopf	Juego de empaquetaduras para descarbonización.	
C Group	4 05 02–0046	Nut	Ecrou	Mutter	Tuerca	4
C Group	1 02 02–0130	Washer	Rondelle	Scheibe	Arandela	4
C Group	1 07 29–0905	Nut	Ecrou	Mutter	Tuerca	
C Group	4 05 29–0925	Woodruff Key	Clavette disque	Rundkeil	Chaveta Woodruff	
C Group	1 09 29–2023	Nut	Ecrou	Mutter	Tuerca	
C Group	1 02 29–2024	Lockwasher	Rondelle frein	Sicherungsscheibe	Freno	
C Group	1 14 40–0022	Stud	Goujon	Stehbolzen	Esparago	4
C15 Standard ...	1 40 40–0038	Shaft (left-hand)	Arbre (gauche)	Welle (Links)	Arbol (izq.)	
C Group	1 37 40–0041	Shaft (right-hand)	Arbre (droite)	Welle (Rechts)	Arbol (der.)	
C Group	1 13 40–0042	Spacer Tube	Tube entretoise	Distanzrohr	Tubo espaciador	
C Group	1 06 40–0043	Plug	Bouchon	Stopfen	Tapon	
C Group	1 42 40–0047	Connecting Rod	Bielle	Pleulstange	Varilla de acoplamiento	
C15 Standard, Trials	1 18 40–0049	Bush	Douille	Büche	Casquillo	
C Group	1 32 40–0057	Pinion	Pignon	Ritzel	Piñón	
C Group	1 21 40–0063	Bush	Douille	Büchse	Casquillo	
C Group	1 01 40–0064	Shim (.003 in.)	Rondelle d'epaisseur (.076 mm.)	Ausgleichsscheibe (.076 mm.)	Espesor (.067 mm.)	
C Group	1 01 40–0065	Shim (.005 in.)	Rondelle d'epaisseur (.127 mm.)	Ausgleichsscheibe (.127 mm.)	Espesor (.127 mm.)	
C Group	1 01 40–0066	Shim (.010 in.)	Rondelle d'epaisseur (.254 mm.)	Ausgleichsscheibe (.254 mm.)	Espesor (.254 mm.)	
C Group	1 13 40–0086	Piston Ring	Segment	Kolbenring	Segmento	
C Group	1 13 40–0087	Piston Ring (+½ mm.)	Segment (+½ mm.)	Kolbenring (+½ mm.)	Segmento (+½ mm.)	
C Group	1 13 40–0088	Piston Ring (+1 mm.)	Segment (+1 mm.)	Kolbenring (+1 mm.)	Segmento +(1 mm.)	
C Group	1 17 40–0090	Piston Ring	Segment	Kolbenring	Segmento	
C Group	1 17 40–0091	Piston Ring (+½ mm.)	Segment (+½ mm.)	Kolbenring (+½ mm.)	Segmento (+½ mm.)	
C Group	1 17 40–0092	Piston Ring (+1 mm.)	Segment (+1 mm.)	Kolbenring (+1 mm.)	Segmento (+1 mm.)	
C Group	1 17 40–0094	Gudgeon Pin	Axe de piston	Kolbenbolzen	Bulón de embolo	
C Group	1 22 40–0095	Piston Ring	Segment	Kolbenring	Segmento	
C Group	1 22 40–0096	Piston Ring + ½ mm.	Segment + ½ mm.	Kolbenring + ½ mm.	Segmento + ½ mm	
C Group	1 22 40–0097	Piston Ring + 1 mm.	Segment + 1 mm.	Kolbenring + 1 mm.	Segmento + 1 mm	
C Group	1 15 40–0100	Push Rod	Tige de culbuteur	Stösselstange	Varilla	2
C15 Standard ...	1 53 40–0103	Camshaft complete	Arbre de cames complet	Nockenwelle Kompl.	Arbol de levas completa	
C Group	1 09 40–0106	Washer	Rondelle	Scheibe	Arandela	
C Group	1 04 40–0116	Peg	Ergot	Stift	Esparago	
C Group	1 01 40–0117	Lockwasher	Rondelle frein	Sicherungsscheibe	Freno	
C Group	1 05 40–0118	Woodruff Key	Clavette disque	Rundkeil	Chaveta Woodruff	
C Group	1 54 40–0125	Cylinder	Cylindre	Zylinder	Cilindro	
C Group	1 03 40–0126	Gasket	Joint	Dichtung	Empaquetadura	
C Group	1 16 40–0140	Gasket	Joint	Dichtung	Empaquetadura	
C Group	1 28 40–0174	Push Rod Tube	Guide de tige de culbuteur	Stösselverkleidungsrohr	Tubo de la varilla de empuje	
C Group	1 09 40–0179	Oil Seal	Joint d'huile	Simmerring	Reten de aceite	
C Group	1 09 40–0180	Oil Seal	Joint d'huile	Simmerring	Reten de aceite	
C15 Standard ...	1 46 40–0258	Piston complete (7.5—1)	Piston complet (7.5—1)	Kolben Kompl. (7.5—1)	Embolo completa (7.5—1)	
C15 Standard ...	1 46 40–0260	Piston complete (+½ mm.)	Piston complet (+½ mm.)	Kolben Kompl. (+½ mm.)	Embolo completa (+½ mm.)	

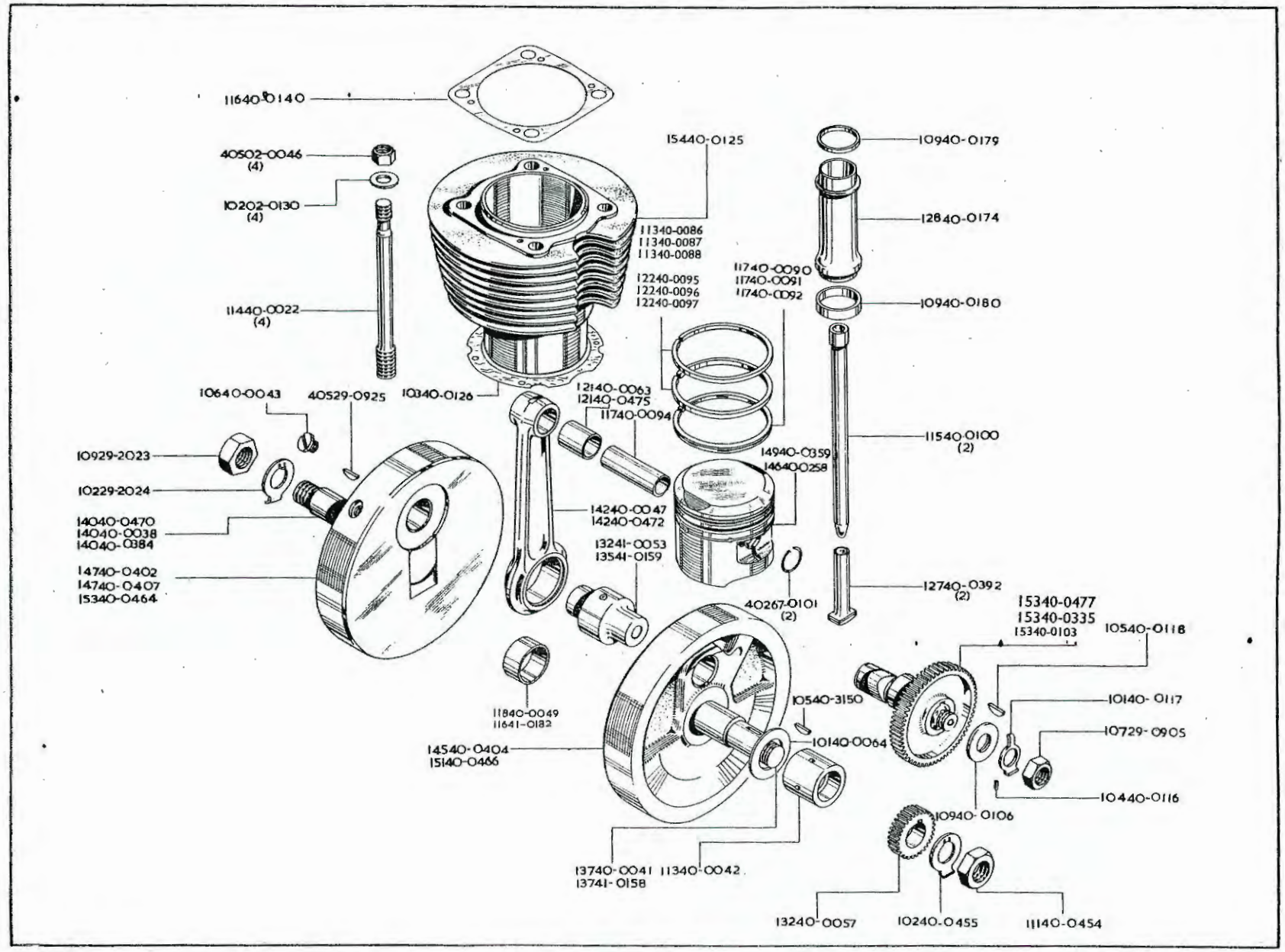
11640-0140
40502-0046
(4)
10202-0130
(4)
11440-0022
(4)
15440-0125
11340-0086
11340-0087
11340-0088
12240-0095
12240-0096
12240-0097
10340-0126
10940-0179
12840-0174
11740-0090
11740-0091
11740-0092
10940-0180
11540-0100
(2)
10640-0043
40529-0925
12140-0063
12140-0475
11740-0094
14940-0359
14640-0258
10929-2023
10229-2024
14040-0470
14040-0038
14040-0384
14240-0047
14240-0472
13241-0053
13541-0159
14740-0402
14740-0407
15340-0464
40267-0101
(2)
12740-0392
(2)
15340-0477
15340-0335
15340-0103
10540-0118
11840-0049
11641-0182
10540-3150
10140-0117
10729-0905
14540-0404
15140-0466
10140-0064
10440-0116
10940-0106
13740-0041
13741-0158
11340-0042
13240-0057
10240-0455
11140-0454

CYLINDER AND CRANKSHAFT GROUP
GROUPE DE CYLINDRE ET DE VILEBREQUIN
ZYLINDER UND KERBELWELLEGRUPPE
GRUPO DE CILINDRO Y DE CIGUEÑAL

Model Modèle Typen Modelos	Spares No. No. de pièce Ersatzteil-nr No. de repuesto	Description	Designation	Beschreibung	Descripción	Per Set Par jeu Pr. Satz Juego de
C15 Standard ...	1 46 40–0262	Piston complete (+1 mm.)	Piston complet (+1 mm.)	Kolben Kompl. (+1 mm.)	Embolo completa (+1 mm.)	
C15 Standard ...	1 47 40–0264	Piston complete (8.5—1)	Piston complet (8.5—1)	Kolben Kompl. (8.5—1)	Embolo completa (8.5—1)	
C15 Standard ...	1 47 40–0266	Piston complete (+½ mm.)	Piston complet (+½ mm.)	Kolben Kompl. (+½ mm.)	Embolo completa (+½ mm.)	
C15 Standard ...	1 47 40-0268	Piston complete (+1 mm.)	Piston complet (+1 mm.)	Kolben Kompl. (+1 mm.)	Embolo completa (+1 mm.)	
C15 Trials, Scrambles	1 53 40–0335	Camshaft complete	Arbre de cames complet	Nockenwelle Kompl.	Arbol de levas completa	
C15 Trials	1 49 40–0341	Piston complete (6.4—1)	Piston complet (6.4—1)	Kolben Kompl. (6.4—1)	Embolo completa (6.4—1)	
C15 Trials	1 49 40–0343	Piston complete (+½ mm.)	Piston complet (+½ mm.)	Kolben Kompl. (+½ mm.)	Embolo completa (+½ mm.)	
C15 Trials	1 49 40–0345	Piston complete (+1 mm.)	Piston complet (+1 mm.)	Kolben Kompl. (+1 mm.)	Embolo completa (+1 mm.)	
C15 Scrambles ...	1 51 40–0347	Piston complete (9—1)	Piston complet (9—1)	Kolben Kompl. (9—1)	Embolo completa (9—1)	
C15 Scrambles ...	1 51 40–0349	Piston complete (+½ mm.)	Piston complet (+½ mm.)	Kolben Kompl. (+½ mm.)	Embolo completa (+½ mm.)	
C15 Scrambles ...	1 51 40–0351	Piston complete (+1 mm.)	Piston complet (+1 mm.)	Kolben Kompl. (+1 mm.)	Embolo completa (+1 mm.)	
C15 Star ...	1 49 40–0359	Piston complete (8—1) (American type).	Piston complet (8—1) (type American).	Kolben Kompl. (8—1) (Amerikanischen Typs).	Embolo completa (8—1) (tipo Americano).	
C15 Standard ...	1 49 40–0361	Piston complete (+½ mm.) (American type).	Piston complet (+½ mm.) (type American).	Kolben Kompl. (+½ mm.) (Amerikanischen Typs).	Embolo completa (+½ mm.) (tipo Americano).	2
C15 Standard ...	1 49 40–0363	Piston complete (+1 mm.) (American type).	Piston complet (+1 mm.) (type American).	Kolben Kompl. (+1 mm.) (Amerikanischen Typs).	Embolo completa (+1 mm.) (tipo Americano).	
C15 Trials, Scrambles	1 40 40–0384	Shaft (left-hand)	Arbre (gauche)	Welle (Links)	Arbol (izq.)	
C Group	1 27 40–0392	Tappet	Poussoir	Stössel	Botador de valvula	
C15 Standard, C15 Star	1 47 40–0402	Crankshaft (left-hand)	Vilebrequin (gauche)	Kurbelwelle (Links)	Ciguëñal (izq.)	
C15 Standard, Trials	1 45 40–0404	Crankshaft (right-hand)	Vilebrequin (droite)	Kurbelwelle (Rechts)	Ciguëñal (der.)	
C15 Trials	1 47 40–0407	Crankshaft (left-hand)	Vilebrequin (gauche)	Kurbelwelle (Links)	Ciguëñal (izq.)	
C15 Scrambles ...	1 51 40–0444*	Piston complete (10—1)	Piston complet (10—1)	Kolben Kompl. (10—1)	Embolo completa (10—1)	
C15 Scrambles ...	1 51 40–0446*	Piston complete (+½ mm.)	Piston complet (+½ mm.)	Kolben Kompl. (+½ mm.)	Embolo completa (+½ mm.)	
C15 Scrambles ...	1 51 40–0448*	Piston complete (+1 mm.)	Piston complet (+1 mm.)	Kolben Kompl. (+1 mm.)	Embolo completa (+1 mm.)	
C Group	1 11 40–0454	Nut	Ecrou	Mutter	Tuerca	
C Group	1 02 40–0455	Lockwasher	Rondelle frein	Sicherungsscheibe	Freno	
C15 Scrambles (1961) Starfire Roadster, Starfire Scrambler	1 53 40–0464	Crankshaft (left-hand)	Vilebrequin (gauche)	Kurbelwelle (Links)	Ciguëñal (izq.)	
C15 Scrambles (1961) Starfire Roadster, Starfire Scrambler	1 51 40–0466	Crankshaft (right-hand)	Vilebrequin (droite)	Kurbelwelle (Rechts)	Ciguëñal (der.)	
C15 Scrambles (1961)	1 40 40–0470	Shaft (left-hand)	Arbre (gauche)	Welle (Links)	Arbol (izq.)	
C15 Scrambles (1961)	1 42 40–0472	Connecting Rod	Bielle	Pleulstange	Varilla de acoplamiento	
C15 Scrambles (1961)	1 21 40–0475	Bush	Douille	Büchse	Casquillo	
C15 Scrambles (1961)	1 43 40–0477	Camshaft complete	Arbre de cames complet	Nockenwelle Kompl.	Arbol de levas completa	
C Group	1 05 40–3150	Woodruff Key	Clavette disque	Rundkeil	Cheveta Woodruff	
C Group	1 32 41–0053	Crankpin	Maneton de vilebrequin	Kurbelzapfen	Codo del ciguëñal	
C15 Scrambles (1961)	1 37 41–0158	Shaft (right-hand)	Arbre (droite)	Welle (Rechts)	Arbol (der.)	
C15 Scrambles (1961)	1 35 41–0159	Crankpin	Maneton de vilebrequin	Kurbelzapfen	Codo del ciguëñal	
C15 Scrambles ...	1 16 41–0182	Bush	Douille	Buchse	Casquillo	
C Group	4 02 67–0101	Circlip	Circlip	Sprengring	Freno	2
		*Fitted on and after Engine No. C15S 2001.	*Montée depuis moteur numéro C15S 2001.	*Nach Motornummer C15S2001 Montiert.	*Montada depués de motor numero C15S 2001.	

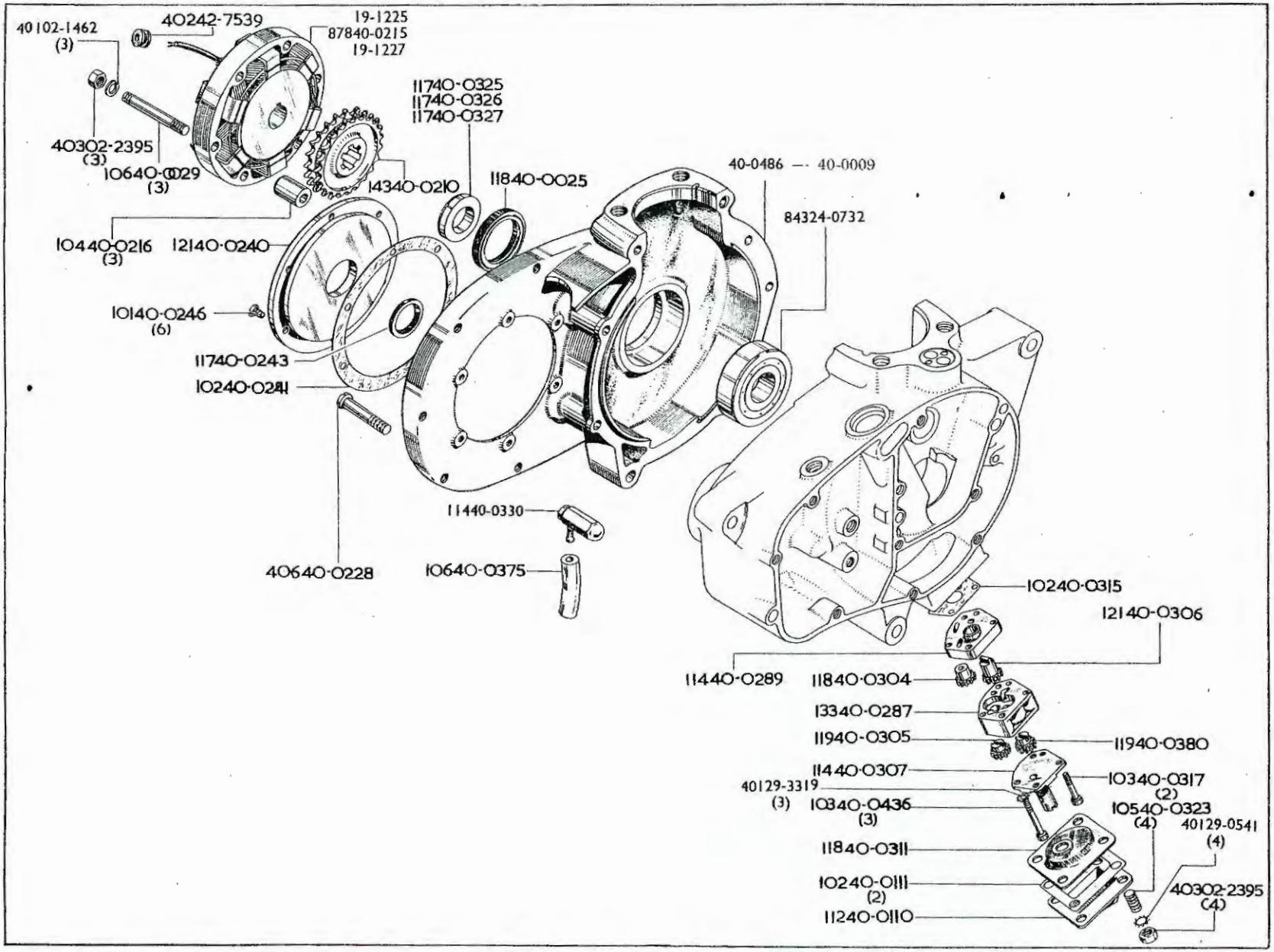
40102-1462
(3)
40242-7539
19-1225
87840-0215
19-1227
11740-0325
11740-0326
11740-0327
40302-2395
(3)
10640-0029
(3)
14340-0210
11840-0025
40-0486 — 40-0009
84324-0732
10440-0216
(3)
12140-0240
10140-0246
(6)
11740-0243
10240-0241
11440-0330
40640-0228
10640-0375
10240-0315
12140-0306
11440-0289
11840-0304
13340-0287
11940-0305
11940-0380
11440-0307
10340-0317
(2)
40129-3319
(3)
10340-0436
(3)
10540-0323
(4)
40129-0541
(4)
11840-0311
10240-0111
(2)
40302-2395
(4)
11240-0110

CRANKCASE
CARTER DE VILEBREQUIN
KURBELGEHÄUSE
CAJA DE CIGUENAL

ALTERNATOR
ALTERNATEUR
LICHTMASCHINE
ALTERNADOR

OIL PUMP
POMPE À HUILE
ÖLPUMPE
BOMBA DE ACEITE

Model Modèle Typen Modelos	Spares No. No. de pièce Ersatzteil-nr No. de repuesto	Description	Designation	Beschreibung	Descripción	Per Set Par jeu Pr. Satz Juego de
C Group	4 01 02–1462	Lockwasher	Rondelle frein	Sicherungsscheibe	Freno	3
C Group	4 03 02–2395	Nut	Ecrou	Mutter	Tuerca	7
C15 Competition ...	19–1225	Alternator	Alternateur	Lichtmaschine	Alternador	
C15 Starfire Scrambler, Starfire Roadster	19–1227	Alternator (American type).	Alternateur (type American).	Lichtmaschine (Amerikanischen Typs).	Alternador (tipo Americano)	
C Group	8 43 24–0732	Bearing	Roulement	Lager	Rolamiento	
C Group	4 01 29–0541	Lockwasher	Rondelle frein	Sicherungsscheibe	Freno	4
C Group	4 01 29–3319	Lockwasher	Rondelle frein	Sicherungsscheibe	Freno	3
C Group (1960) ...	40–0009*	Crankcase (left-hand)	Carter de vilebrequin (gauche)	Kurbelgehäuse (Links)	Caja de ciguëñal (izq.)	
C Group	1 05 40–0023	Stud	Goujon	Stehbolzen	Esparago	4
C Group	1 18 40–0025	Oil Seal	Joint d'huile	Simmerring	Reten de aceite	
C Group	1 06 40–0029	Stud	Goujon	Stehbolzen	Esparago	3
C Group	1 12 40–0110	Sump Cover	Carter	Gehäuse	Carter	
C Group	1 02 40–0111	Gasket	Joint	Dichtung	Empaquetadura	2
C Group	1 43 40–0210	Sprocket	Pignon à chaîne	Ritzel	Piñón	
C15 Standard ...	8 78 40–0215	Alternator	Alternateur	Lichtmaschine	Alternador	
C Group	1 04 40–0216	Distance Piece	Entretoise	Distanzrohr	Distanciador	3
C Group	4 06 40–0228	Screw	Vis	Schraube	Tornillo	
C Group	1 21 40–0240	Oil Seal Housing	Boiter de joint d'huile	Simmerringfassung	Caja reten de aceite	
C Group	1 02 40–0241	Gasket	Joint	Dichtung	Empaquetadura	
C Group	1 17 40–0243	Oil Seal	Joint d'huile	Simmerring	Reten de aceite	
C Group	1 01 40–0246	Screw	Vis	Schraube	Tornillo	6
C Group	1 33 40–0287	Oil Pump Body	Corps du pompe à huile	Ölpumpegehäuse	Cuerpo de la bomba de aceite	
C Group	1 14 40–0289	Top Cover	Chapeau de protection sup.	Schutzkappe Oben	Tapa superior	
C Group	1 51 40–0303	Oil Pump complete	Pompe à huile complet	Ölpumpe (Vollst)	Bomba de aceite completa	
C Group	1 18 40–0304	Feed Gear	Engrenage d'alimentation	Zufuhrzahnrad	Engrenaje de alimentación	
C Group	1 19 40–0305	Scavenge Gear	Engrenage de retour d'huile	Rueckfoerderzahnrad	Engrenaje de barrido	
C Group	1 21 40–0306	Feed Gear	Engrenage d'alimentation	Zufuhrzahnrad	Engrenaje de alimentación	
C Group	1 14 40–0307	Scavenge Valve	Soupape de retour d'huile	Rueckanfventil	Valvula de barrido	
C Group	1 18 40–0311	Sump Filter	Filtre de carter	Gehäusefilter	Filtro de carter	
C Group	1 02 40–0315	Gasket	Joint	Dichtung	Empaquetadura	
C Group	1 03 40–0317	Screw	Vis	Schraube	Tornillo	2
C Group	1 17 40–0325	Distance Piece (.324—.327 mm.).	Entretoise (8.230—8.306 mm.)	Distanzrohr (8.230—8.306 mm.)	Distanciador (8.230—8.306 mm.)	
C Group	1 17 40–0326	Distance Piece (.309—.312 mm.).	Entretoise (.309—.312 mm.)	Distanzrohr (.309—.312 mm.)	Distanciador (.309—.312 mm.)	
C Group	1 17 40–0327	Distance Piece (.294—.297 mm.).	Entretoise (.294—.297 mm.)	Distanzrohr (.294—.297 mm.)	Distanciador (.294—.297 mm.)	
C Group	1 14 40–0330	Oil Feed Union	Raccord d'alimentation d'huile	Ölzüfuhrverbindung	Union de la tuberia de alimentación de aceite.	
C Group	1 06 40–0375	Oil Pipe	Conduit ou canalisation d'huile	Ölleitung	Conección del engrase	
C Group	1 19 40–0380	Scavenge Gear	Engrenage de retour d'huile	Rueckfoerderzahnrad	Engrenaje de barrido	
C Group	1 03 40–0436	Screw	Vis	Schraube	Tornillo	3
C Group (1961) ...	40–486*	Crankcase (Left Hand)	Carter de vilebrequin (gauche)	Kurbelgehäuse (Links)	Caja de ciguënal	
C Group	4 02 42–7539	Grommet	Rondelle capuchon	Tülle	Manguera	
		*Supplied only as Crankcase complete 1 80 40–0425 (1960) 1 80 40–0484 (1961)	*Livres seulement comme carter complet 1 80 40-0425 (1960) 1 80 40-0484 (1961)	*Nur Als Vollständige Gehäuse Geliefert 1 80 40–0425 (1960) 1 80 40-0484 (1961)	*Suministrads solamente como carter completa 1 80 40–0425 (1960) 1 80 40–0484 1961)	

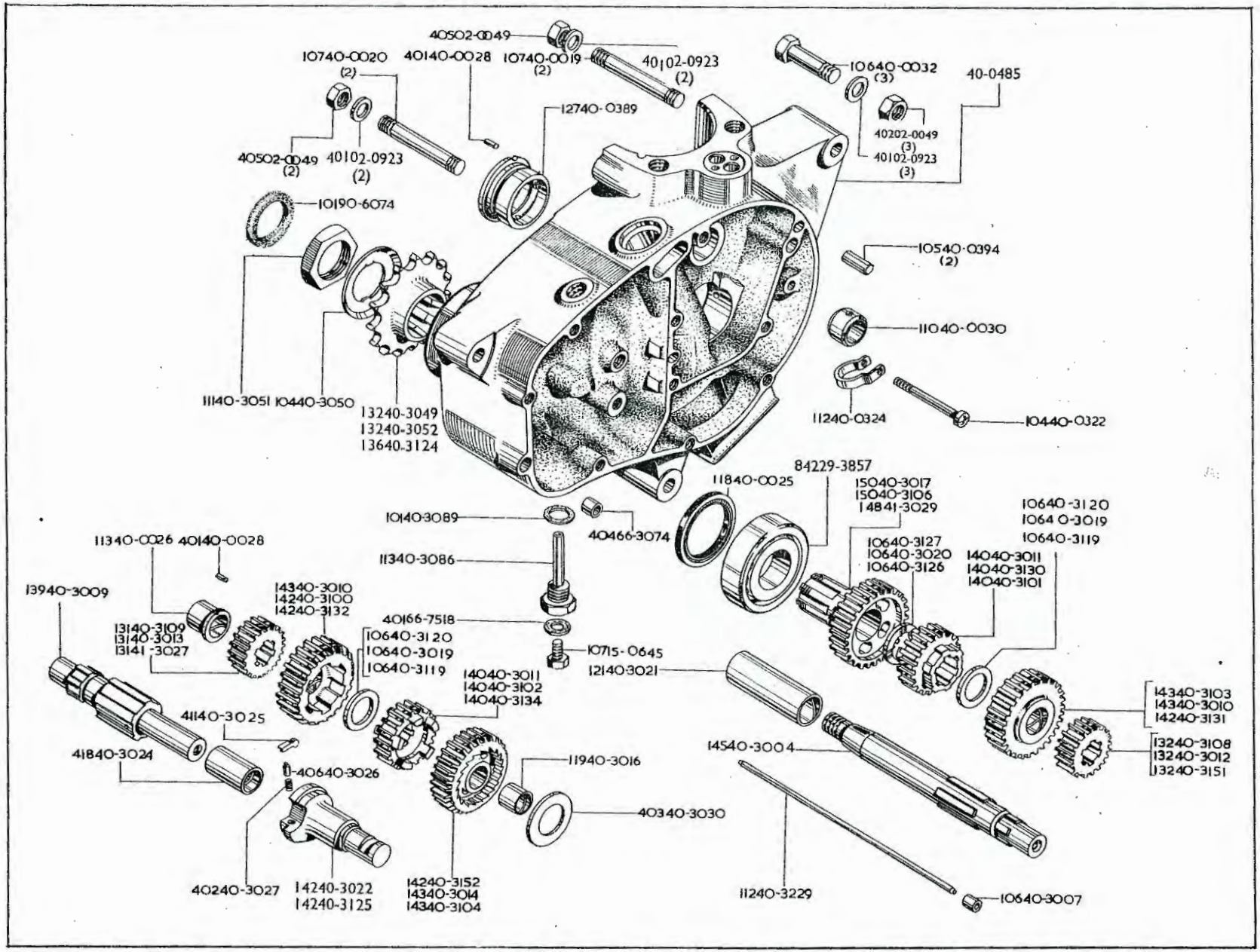

GEAR CLUSTER

GEAR CLUSTER
JEU D'ENGRENAGES
ZAHNRADSTAZ
JUEGO DE ENGRANAJES

Model Modèle Typen Modelos	Spares No. No de pièce Ersatzteil-nr No de repuesto	Description	Designation	Beschreibung	Descripción	Per Set Par jeu Pr. Satz Juego de
C Group	4 02 02-0049	Nut	Ecrou	Mutter	Tuerca	7
C Group	4 01 02-0923	Washer	Rondelle	Scheibe	Arandela	7
C Group	1 07 15-0645	Bolt	Boulon	Schraube	Tornillo	
C Group	8 42 29-3857	Bearing	Roulement	Lager	Rolamiento	
C Group	1 07 40-0019	Stud	Goujon	Stehbolzen	Esparago	2
C Group	1 07 40-0020	Stud	Goujon	Stehbolzen	Esparago	2
C Group	1 18 40-0025	Oil Seal	Joint d'huile	Simmerring	Reten de aceite	
C Group	1 13 40-0026	Bush	Douille	Büchse	Casquillo	
C Group	4 01 40-0028	Peg	Ergot	Stift	Esparago	2
C Group	1 10 40-0030	Bush	Douille	Büchse	Casquillo	
C Group	1 06 40-0032	Bolt	Boulon	Schraube	Tornillo	3
C Group	1 04 40-0322	Screw	Vis	Schraube	Tornillo	
C Group	1 12 40-0324	Clip	Bride	Klammer	Grapa	
C Group	1 27 40-0389	Bush	Douille	Büchse	Casquillo	
C Group	1 05 40-0394	Dowel	Goujon	Passtift	Pesador	2
C Group (1960) ...	40-0426*	Crankcase (right-hand)	Carter de vilebrequin (droite)	Kurbelgehäuse (Rechts)	Caja de ciguëñal (der.)	
C Group (1961) ...	40-0485*	Crankcase (right hand)	Carter de vilebrequin (droite)	Kurbelgehäuse (Rechts)	Caja de ciguënal (der)	
C Group	1 45 40-3004	Mainshaft	Arbre primaire	Getriebwelle	Arbol principal	
C Group	1 06 40-3007	Bush	Douille	Büchse	Casquillo	
C Group	1 39 40-3009	Layshaft complete	Arbre secondaire complet	Vorgelegewelle Kompl.	Arbol de reenvio completa	
C15 Standard ...	1 43 40-3010	Pinion (27T)	Pignon D — 27	Ritzel Z — 27	Piñón D — 27	2
C15 Standard ...	1 40 40-3011	Pinion (23T)	Pignon D — 23	Ritzel Z — 23	Piñón D — 23	2
C15 Standard ...	1 32 40-3012	Pinion (18T)	Pignon D — 18	Ritzel Z — 18	Piñón D — 18	
C15 Standard ...	1 31 40-3013	Pinion (20T)	Pignon D — 20	Ritzel Z — 20	Piñón D — 20	
C15 Standard ...	1 43 40-3014	Pinion (32T)	Pignon D — 32	Ritzel Z — 32	Piñón D — 32	
C Group	1 19 40-3016	Bush	Douille	Büchse	Casquillo	
C15 Standard ...	1 50 40-3017	Pinion (30T)	Pignon D — 30	Ritzel Z — 30	Piñón D — 30	
C Group	1 06 40-3019	Washer (.075/.076 in.)	Rondelle (1.905/1.930 mm.)	Scheibe (1.905/1.930 mm.)	Arandela (1.905/1.930 mm.)	2
C Group	1 06 40-3020	Washer (.093/.094 in.)	Rondelle (2.362/2.387 mm.)	Scheibe (2.362/2.387 mm.)	Arandela (2.362/2.387 mm.)	
C Group	1 21 40-3021	Bush	Douille	Büchse	Casquillo	
C Group	1 42 40-3022	Kickstart Spindle	Arbre du kick	Kickstarterwelle	Arbol del arrancador	
C Group	4 18 40-3024	Bush	Douille	Büchse	Casquillo	
C Group	4 11 40-3025	Pawl	Cliquet	Klaue	Trinquete	

*Supplied only as Crankcase complete 1 80 40-0425 (1960) 1 80 40-0484 (1961)

*Livres seulement comme carter complet 1 80 40-0425 (1960) 1 80 40-0484 (1961)

*Nur Als Vollständige Gehäuse Geliefert 1 80 40-0425 (1960) 1 80 40-0484 (1961)

*Suministrads solamente como carter completa 1 80 40-0425 (1960) 1 80 40-0484 (1961)

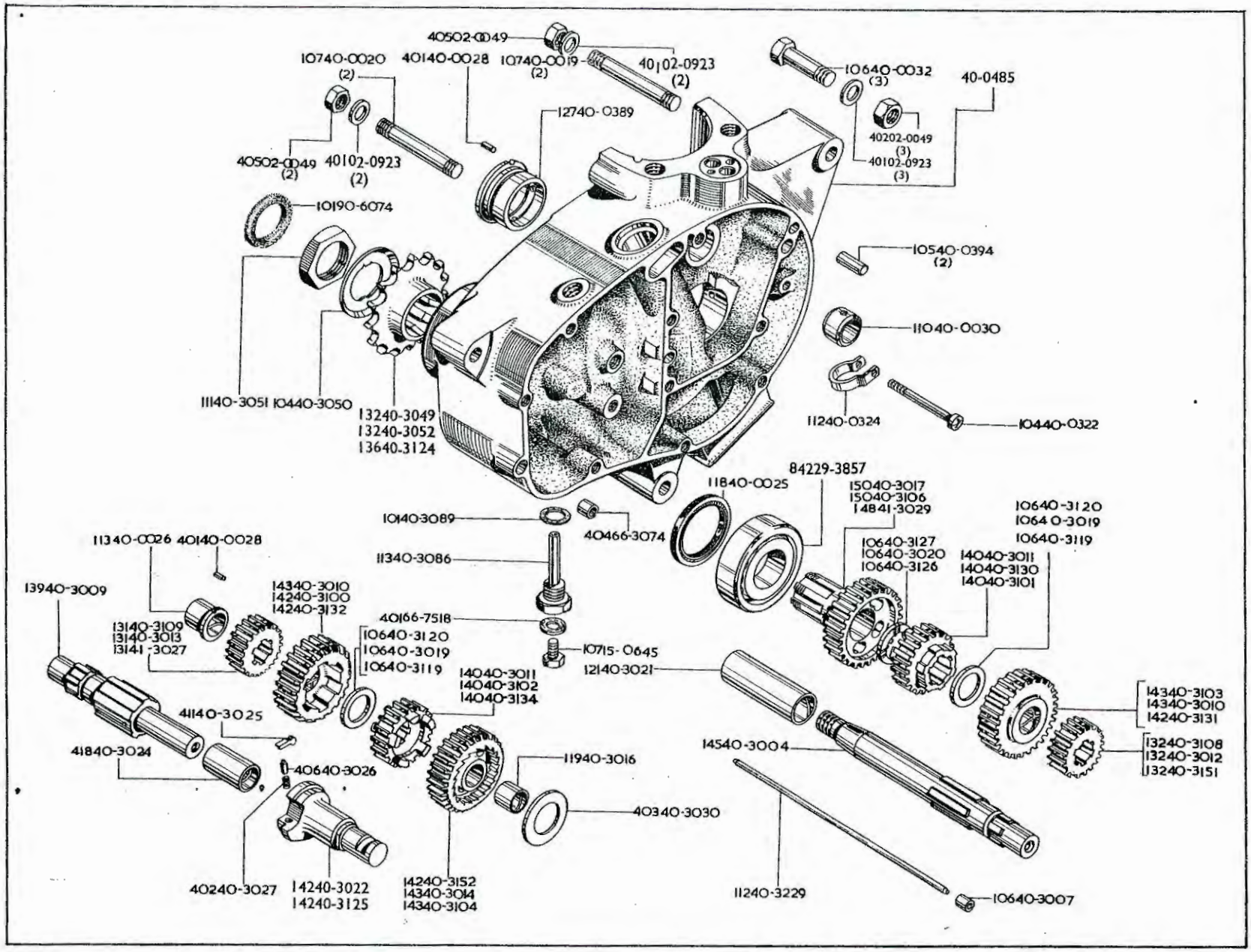
40502-0049
10740-0020 (2)
40140-0028
10740-0019 (2)
40102-0923 (2)
10640-0032 (3)
40-0485
12740-0389
40202-0049 (3)
40102-0923 (3)
40502-0049 (2)
40102-0923 (2)
10190-6074
10540-0394 (2)
11040-0030
11140-3051
10440-3050
13240-3049
13240-3052
13640-3124
11240-0324
10440-0322
84229-3857
11840-0025
15040-3017
15040-3106
14841-3029
10140-3089
40466-3074
10640-3120
10640-3019
10640-3119
11340-0026
40140-0028
11340-3086
10640-3127
10640-3020
10640-3126
14040-3011
14040-3130
14040-3101
13940-3009
14340-3010
14240-3100
14240-3132
13140-3109
13140-3013
13141-3027
40166-7518
10640-3120
10640-3019
10640-3119
10715-0645
12140-3021
14040-3011
14040-3102
14040-3134
14340-3103
14340-3010
14240-3131
41140-3025
41840-3024
14540-3004
13240-3108
13240-3012
13240-3151
40640-3026
11940-3016
40340-3030
40240-3027
14240-3022
14240-3125
14240-3152
14340-3014
14340-3104
11240-3229
10640-3007

GEAR CLUSTET
JEU D'ENGRENAGES
ZAHNRADSTAZ
JUEGO DE ENGRANAJES

Model Modèle Typen Modelos	Spares No. No. de pièce Erstazteil-nr No. de repuestó	Description	Designation	Beschreibung	Descripción	Per Set Par jeu Pr. Satz Juego de
C Group	4 06 40–3026	Plunger	Plongeur	Plunger	Buzo	
C Group	4 02 40–3027	Spring	Ressort	Feder	Resorte	
C Group	4 03 40–3030	Retainer	Arrêtoir	Sicherung	Freno	
C15 Standard ...	1 32 40–3049	Sprocket (17T) solo	Pignon D — 17 (solo)	Ritzrl Z — 17 (solo)	Piñón D — 17 (solo)	
C Group	1 04 40–3050	Lockwasher	Rondelle frein	Sicherungsscheibe	Freno	
C Group	1 11 40–3051	Nut	Ecrou	Mutter	Tuerca	
C15 Standard ...	1 32 40–3052	Sprocket (16T) sidecar	Pignon D — 16 (sidecar)	Ritzel Z — 16 (Beiwagen)	Piñón D — 16 (sidecar)	
C15 Trials, Scrambles	1 26 40–3052	Sprocket (16T)	Pignon D — 16	Ritzel Z — 16	Piñón D — 16	
C Group	1 13 40–3086	Drain Plug	Bouchon de vidange d'huile	Ablassschraube	Tapón	
C Group	1 01 40–3089	Sealing Washer	Joint d'étanchéité	Dichtung	Arandela de reten	
C15 Trials	1 42 40–3100	Pinion (30T)	Pignon D — 30	Ritzel Z — 30	Piñón D — 30	
C15 Trials	1 40 40–3101	Pinion (20T)	Pignon D — 20	Ritzel Z — 20	Piñón D — 20	
C15 Trials	1 40 40–3102	Pinion (25T)	Pignon D — 25	Ritzel Z — 25	Piñón D — 25	
C15 Trials	1 43 40–3103	Pinion (25T)	Pignon D — 25	Ritzel Z — 25	Piñón D — 25	
C15 Trials	1 43 40–3104	Pinion (23T)	Pignon D — 23	Ritzel Z — 23	Piñón D — 23	
C15 Trials	1 50 40–3106	Pinion (31T)	Pignon D — 31	Ritzel Z — 31	Piñón D — 31	
C15 Trials	1 32 40–3108	Pinion (17T)	Pignon D — 17	Ritzel Z — 17	Piñón D — 17	
C15 Trials	1 31 40–3109	Pinion (19T)	Pignon D — 19	Ritzel Z — 19	Piñón D — 19	
C Group	1 06 40–3119	Washer (.071/.070 in.)	Rondelle (1.803/1.778 mm.)	Scheibe (1.803/1.778 mm.)	Arandela (1.803/1.778 mm.)	2
C Group	1 06 40–3120	Washer (.081/.080 in.)	Rondelle (2.057/2.033 mm.)	Scheibe (2.057/2.033 mm.)	Arandela (2.057/2.033 mm.)	2
Starfire Roadster ...	1 36 40–3124	Pinion (20T)	Pignon D — 20	Ritzel Z — 20	Piñón D — 20	
Starfire Roadster, Starfire Scrambler ...	1 42 40–3125	Kickstart Spindle	Arbre du kick	Kickstarterwelle	Arbol del arrancador	
C Group	1 06 40–3126	Washer (.098/.099 in.)	Rondelle (2.489/2.514 mm.)	Scheibe (2.489/2.514 mm.)	Arandela (2.489/2.514 mm.)	
C Group	1 06 40–3127	Washer (.103/.104 in.)	Rondelle (2.616/2.641 mm.)	Scheibe (2.616/2.641 mm.)	Arandela (2.616/2.641 mm.)	
C15 Scrambles ...	1 40 40–3130	Pinion (24T)	Pignon D — 24	Ritzel Z — 24	Piñón D — 24	
C15 Scrambles ...	1 42 40–3131	Pinion (28T)	Pignon D — 28	Ritzel Z — 28	Piñón D — 28	
C15 Scrambles ...	1 42 40–3132	Pinion (26T)	Pignon D — 26	Ritzel Z — 26	Piñón D — 26	
C15 Scrambles ...	1 40 40–3134	Pinion (22T)	Pignon D — 22	Ritzel Z — 22	Piñón D — 22	
C15 Scrambles ...	1 32 40–3151	Pinion (21T)	Pignon D — 21	Ritzel Z — 21	Piñón D — 21	
C15 Scrambles ...	1 42 40–3152	Pinion (29T)	Pignon D — 29	Ritzel Z — 29	Piñón D — 29	
C Group	1 12 40–3229	Clutch Rod	Tige d'embrayage	Kupplungsdruckstange	Varilla del embrague	
C15 Scrambles ...	1 31 41–3027	Pinion (17T)	Pignon D — 17	Ritzel Z — 17	Piñón D — 17	
C15 Scrambles ...	1 48 41–3029	Pinion (26T)	Pignon D — 26	Ritzel Z — 26	Piñón D — 26	
C Group	4 04 66–3074	Dowel	Goujon	Passtift	Pasador	
C Group	4 01 66–7518	Sealing Washer	Joint d'étanchéité	Dichtung	Arandela de reten	
C Group	1 01 90–6074	Felt Washer	Rondelle feutre	Filzscheibe	Arandela de fieltro	

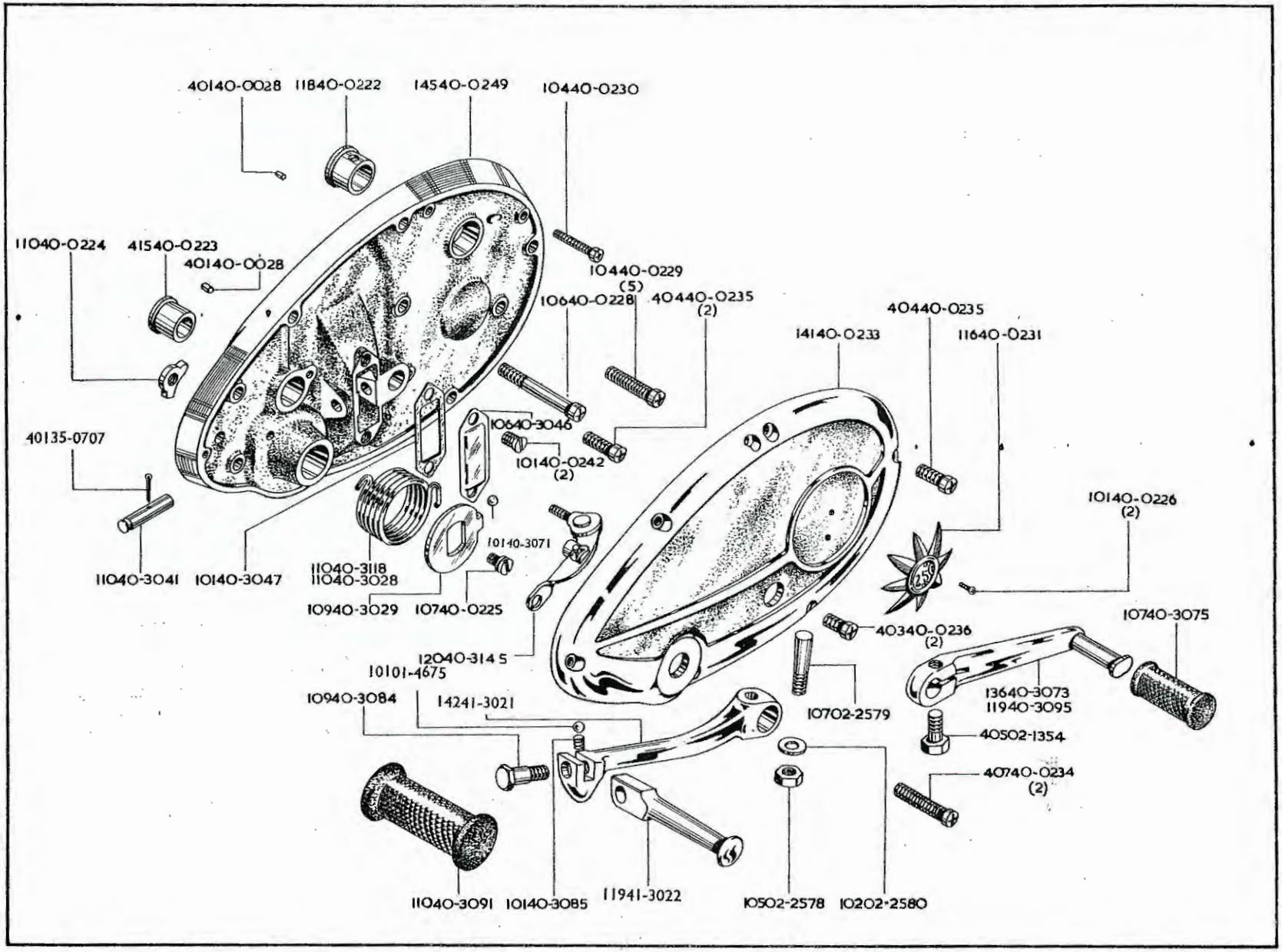
40140-0028
11840-0222
14540-0249
10440-0230
11040-0224
41540-0223
40140-0028
10440-0229
(5)
10640-0228
40440-0235
(2)
40440-0235
14140-0233
11640-0231
10640-3046
40135-0707
10140-0242
(2)
10140-0226
(2)
10140-3071
11040-3041
10140-3047
11040-3118
11040-3028
10940-3029
10740-0225
12040-3145
40340-0236
(2)
10740-3075
10101-4675
10940-3084
14241-3021
10702-2579
13640-3073
11940-3095
40502-1354
40740-0234
(2)
11040-3091
10140-3085
11941-3022
10502-2578
10202-2580

FOOTSTART AND FOOTCHANGE
KICKSTART ET SELECTEUR AU PIED
KICKSTART UND FUSSSCHALTUNG
ARRANCADOR Y CAMBIO DE PIE

Model Modèle Typen Modelos	Spares No. No. de pièce Ersatzteil-nr No. de repuesto	Description	Designation	Beschreibung	Descripción	Per Set Par jeu Pr. Satz Juego de
C Group	1 01 01-4675	Ball	Bille	Kugel	Bola	
C Group	4 05 02-1354	Bolt	Boulon	Schraube	Tornillo	
C Group	1 05 02-2578	Nut	Ecrou	Mutter	Tuerca	
C Group	1 07 02-2579	Cotter	Demi-lune	Nutenkeil	Cheveta ordinaria	
C Group	1 02 02-2580	Washer	Rondelle	Scheibe	Arandela	
C Group	4 01 35-0707	Split Pin	Goupille fendue	Splint	Chaveta hendida	
C Group	4 01 40-0028	Peg	Ergot	Stift	Esparago	2
C Group	1 18 40-0222	Bush	Douille	Büchse	Casquillo	
C Group	4 15 40-0223	Bush	Douille	Büchse	Casquillo	
C Group	1 10 40-0224	Kickstart Stop	Butée de kick	Kickstarteranschlag	Dispositivo de tope	
C Group	1 07 40-0225	Screw	Vis	Schraube	Tornillo	
C Group	1 01 40-0226	Screw	Vis	Schraube	Tornillo	2
C Group	1 06 40-0228	Screw (long)	Vis (longue)	Schraube (Lang)	Tornillo (largo)	
C Group	1 64 40-0229	Screw (medium)	Vis (moyen)	Schraube (Mittel)	Tornillo (medio)	5
C Group	1 04 40-0230	Screw (short)	Vis (court)	Schraube (Kurz)	Tornillo (corto)	2
C Group	1 16 40-0231	Name Plate "250"	Ecusson "250"	Typenzeichen "250"	Placa-marca "250"	
C Group	1 41 40-0233	Outer Cover	Couvercle extérieur	Aussere Schutzkappe	Tapa Exterior	
C Group	4 07 40-0234	Screw	Vis	Schraube	Tornillo	2
C Group	4 04 40-0235	Screw	Vis	Schraube	Tornillo	3
C Group	4 03 40-0236	Screw	Vis	Schraube	Tornillo	2
C Group	1 01 40-0242	Screw	Vis	Schraube	Tornillo	2
C Group	1 45 40-0249	Inner Cover	Couvercle intérieur	Innere Schutzkappe	Tapa interior	
C15 Standard ...	1 10 40-3028	Spring	Ressort	Feder	Resorte	
C Group	1 09 40-3029	Anchor Plate	Plaque d'ancrage	Ankerplatte	Soporte	
C Group	1 10 40-3041	Spindle	Arbre	Welle	Arbol	
C Group	1 06 40-3046	Cover	Couvercle	Schutzkappe	Tapa	
C Group	1 01 40-3047	Gasket	Joint	Dichtung	Empaquetadura	
C Group	1 01 40-3071	Ball	Bille	Kugel	Bola	
C Group	1 36 40-3073	Lever	Levier	Hebel	Palanca	
C Group	1 07 40-3075	Rubber Pad	Tampon caoutchouc	Gummiauflage	Cojin de goma	
C Group	1 09 40-3084	Bolt	Boulon	Schraube	Tornillo	
C Group	1 01 40-3085	Spring	Ressort	Feder	Resorte	
C Group	1 10 40-3091	Rubber Pad	Tampon caoutchouc	Gummiauflage	Cojin de goma	
C15 Trials, Scrambles	1 19 40-3095	Lever	Levier	Hebel	Palanca	
C15 Trials, Scrambles	1 49 40-3096	Lever complete	Levier complet	Hebel Kompl.	Palanca completa	
C15 Trials, Scrambles	1 43 40-3097	Lever	Levier	Hebel	Palanca	
C15 Trials, Scrambles	1 10 40-3118	Spring	Ressort	Feder	Resorte	
C Group	1 20 40-3145	Clutch Lever complete	Levier d'embrayage complet	Kupplungshebel Kompl.	Palanca del embrague completa	
C Group	1 45 41-3020	Lever Complete	Levier complet	Hebel Kompl.	Palanca completa	
C Group	1 42 41-3021	Lever	Levier	Hebel	Palanca	
C Group	1 19 41-3022	Pedal	Pedale	Hebel	Pedal	

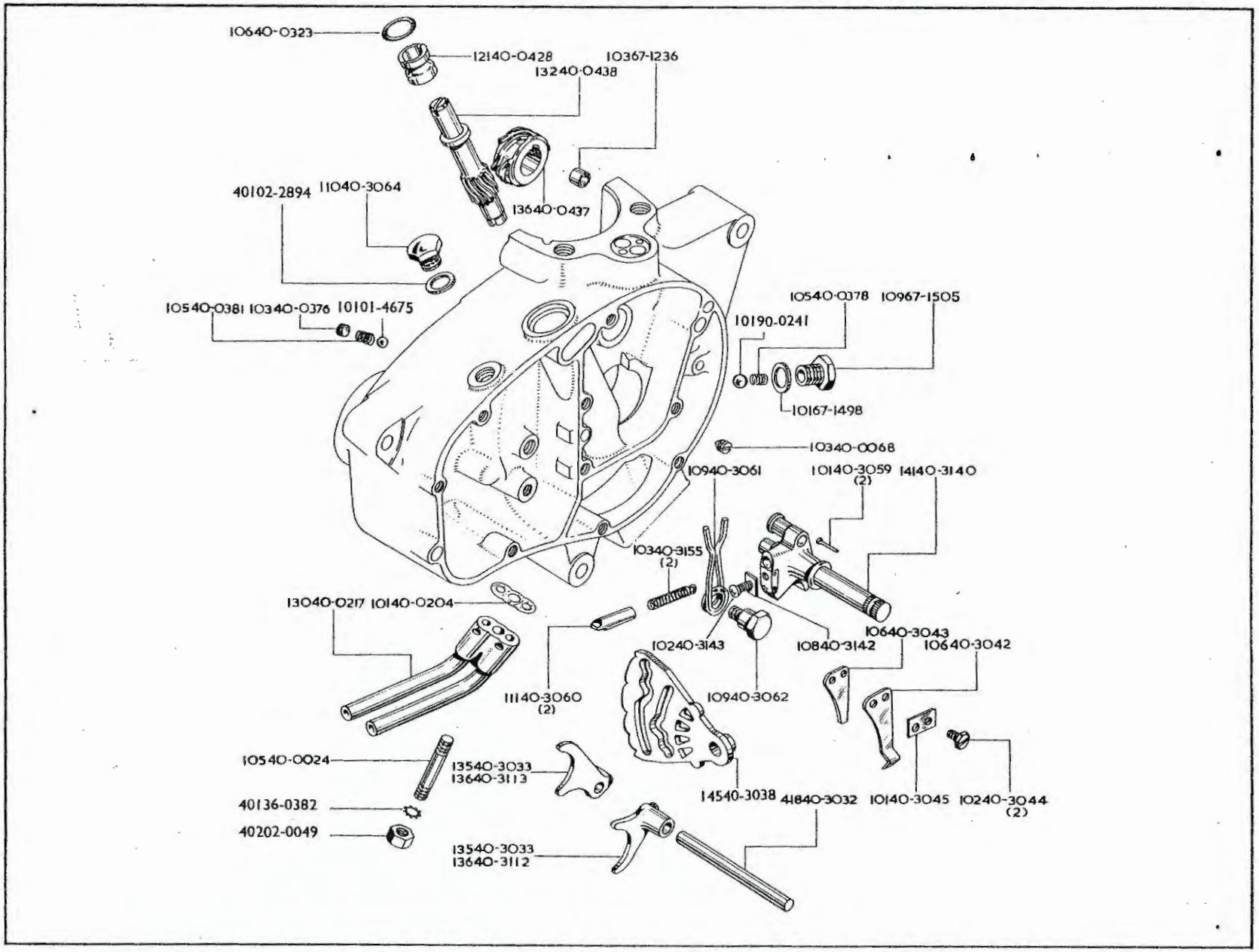
10640-0323
12140-0428
13240-0438
10367-1236
13640-0437
40102-2894
11040-3064
10540-0381
10340-0376
10101-4675
10540-0378
10967-1505
10190-0241
10167-1498
10340-0068
10940-3061
10140-3059
(2)
14140-3140
10340-3155
(2)
13040-0217
10140-0204
10240-3143
10840-3142
10640-3043
10640-3042
11140-3060
(2)
10940-3062
10540-0024
13540-3033
13640-3113
40136-0382
40202-0049
14540-3038
41840-3032
10140-3045
10240-3044
(2)
13540-3033
13640-3112

GEARCHANGE MECHANISM
MÉCANISME DE CHANGEMENT DE VITESSE
SCHALTUNG
CAMBIO

Model Modele Typen Modelos	Spares No. No de piece Ersatzteil-nr No de repuesto	Description	Designation	Beschreibung	Descripción	Per Set Par jeu Pr. Satz Juego de
C Group	1 01 01-4675	Ball	Bille	Kugel	Bola	
C Group	4 02 02-0049	Nut	Ecrou	Mutter	Tuerca	
C Group	4 01 02-2894	Sealing Ring	Bague d'étanchéité	Dichtung	Junta	
C Group	4 01 36-0382	Lockwasher	Rondelle frein	Sicherungsscheibe	Freno	
C Group	1 05 40-0024	Stud	Goujon	Stehbolzen	Esparago	
C Group	1 03 40-0068	Screw	Vis	Schraube	Tornillo	
C Group	1 01 40-0204	Gasket	Joint	Dichtung	Empaquetadura	
C Group	1 30 40-0217	Oil Pipe	Conduit d'huile	Ölleitung	Coneccion de engrase	
C Group	1 06 40-0323	Sealing Ring	Bague d'étanchéité	Dichtring	Junta	
C Group	1 03 40-0376	Screw	Vis	Schraube	Tornillo	
C Gronp	1 05 40-0378	Spring	Ressort	Feder	Resorte	
C Group	1 05 40-0381	Spring	Ressort	Feder	Resorte	
C Group	1 21 40-0428	Bush	Douille	Büchse	Casquillo	
C Group	1 36 40-0437*	Contact Breaker Drive	Entrainement du rupteur	Unterbrecherantrieb	Accionamiento del interruptor	
C Group	1 32 40-0438*	Contact Breaker Drive	Entrainement du rupteur	Unterbrecherantrieb	Accionamiento del interruptor	
C Group	4 18 40-3032	Spindle	Arbre	Welle	Arbol	
C15 Std., Scrambles ...	1 35 40-3033	Selector Fork	Fourchette de selecteur	Schaltgabel	Horquilla de mando de caja de velocidades.	2
C Group	1 45 40-3038	Cam Plate	Plaque de came	Nockenplatte	Placa de leva	
C Group	1 06 40-3042	Spring	Ressort	Feder	Resorte	
C Group	1 06 40-3043	Spring Plate	Plaque àressort	Federplatte	Placa de resorte	
C Group	1 02 40-3044	Screw	Vis	Schraube	Tornillo	2
C Group	1 01 40-3045	Lockwasher	Rondelle frein	Sicherungsscheibe	Freno	
C Group	1 01 40-3059	Rivet	Rivet	Niete	Remache	2
C Group	1 11 40-3060	Plunger	Plongeur	Plunger	Buzo	2
C Group	1 09 40-3061	Spring	Ressort	Feder	Resorte	
C Group	1 09 40-3062	Bolt	Boulon	Schraube	Tornillo	
C Group	1 10 40-3064	Plug	Bouchon	Stopfen	Tapon	
C15 Trials	1 36 40-3112	Selector Fork (layshaft)	Fourchette de selecteur (arbre secondaire).	Schaltgabel (Vorgelegewelle)	Horquilla de mando de caja de velocidades (arból de reenvio)	
C15 Trials	1 36 40-3113	Selector Fork (mainshaft)	Fourchette de selecteur (arbre primaire).	Schaltgabel (Getriebewelle)	Horquilla de mando de caja de velocidades (arból principal)	
C Group	1 41 40-3140	Quadrant complete	Secteur complet	Quadrant Kompl.	Sector completa	
C Group	1 08 40-3142	Plate	Plaque	Scheibe	Placa	
C Group	1 02 40-3143	Screw	Vis	Schraube	Tornillo	
C Group	1 03 40-3155	Spring	Ressort	Feder	Resorte	
C Group	1 03 67-1236	Dowel	Goujon	Passtift	Pasador	
C Group	1 01 67-1498	Sealing Ring	Bague d'étanchéité	Dichtung	Junta	
C Group	1 09 67-1505	Plug	Bouchon	Stopfen	Tapon	
C Group	1 01 90-0241	Ball	Bille	Kugel	Bola	

*Not supplied separately. *Ne pas fourni separement. *Nicht Getrennt Geliefert. *No se siminstra por sepado.

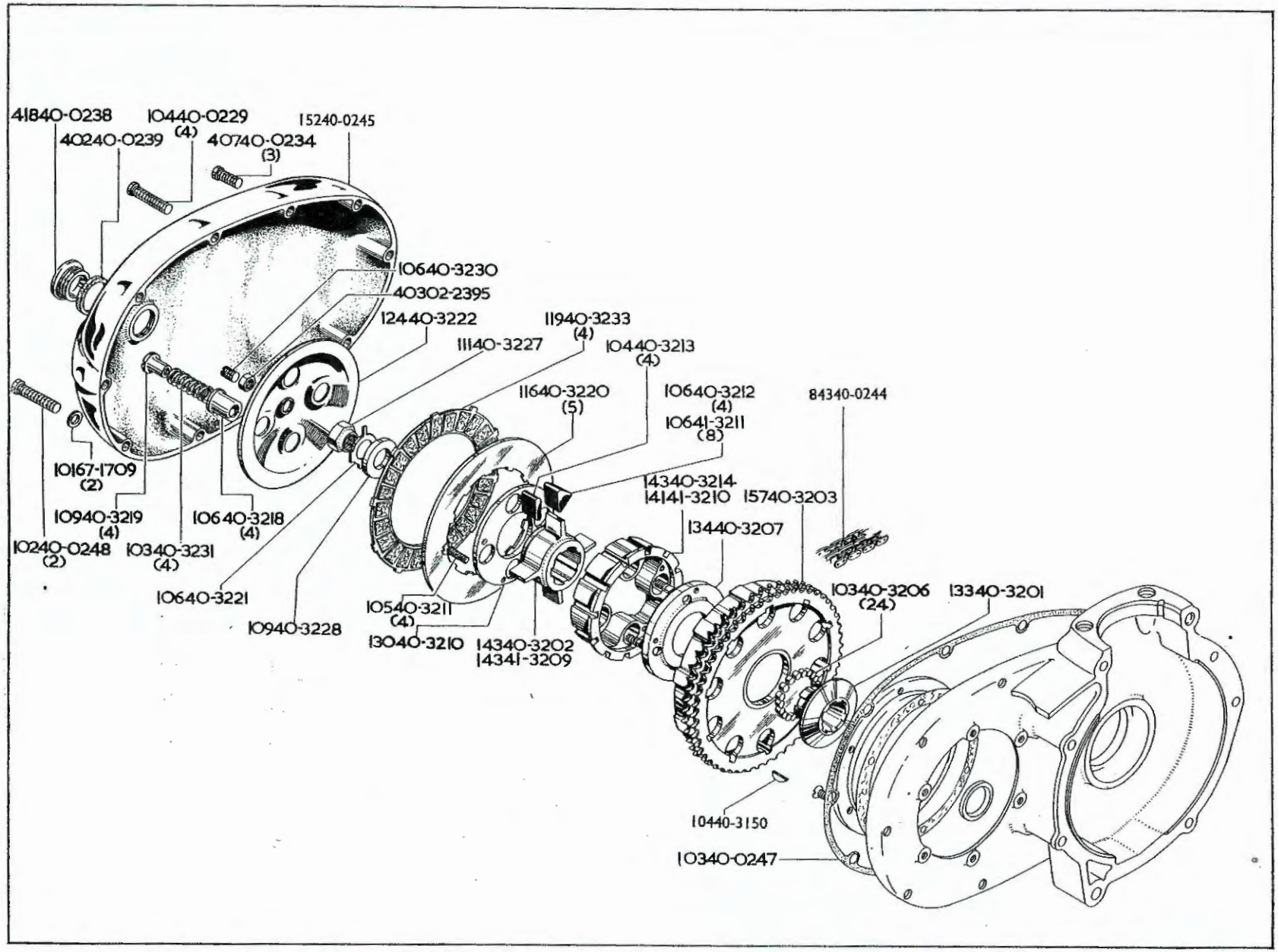
41840-0238
10440-0229 (4)
15240-0245
40240-0239
40740-0234 (3)
10640-3230
40302-2395
12440-3222
11940-3233 (4)
11140-3227
10440-3213 (4)
11640-3220 (5)
10640-3212 (4)
84340-0244
10641-3211 (8)
10167-1709 (2)
14340-3214
14141-3210
15740-3203
10940-3219 (4)
10640-3218 (4)
13440-3207
10240-0248 (2)
10340-3231 (4)
10340-3206 (24)
13340-3201
10640-3221
10540-3211 (4)
10940-3228
13040-3210
14340-3202
14341-3209
10440-3150
10340-0247

CLUTCH
EMBRAYAGE
KUPPLUNG
EMBRAGUE

Model Modèle Typen Modelos	Spares No. No. de pièce Ersatzteil-nr No. de repuesto	Description	Designation	Beschreibung	Descripción	Per Set Par jeu Pr. Satz Juego de
C Group	4 03 02–2395	Nut	Ecrou	Mutter	Tuerca	
C Group	1 04 40–0229	Screw (short)	Vis (court)	Schraube (Kurz)	Tornillo (corto)	4
C Group	4 07 40–0234	Screw (long)	Vis (longue)	Schraube (Lang)	Tornillo (largo)	3
C Group	4 18 40–0238	Plug	Bouchon	Stopfen	Tapon	
C Group	4 02 40–0239	Sealing Ring	Bague d'étanchéité	Dichtring	Junta	
C Group	8 43 40–0244	Chain	Chaîne	Kette	Cadena	
C Group	1 52 40–0245	Cover	Couvercle	Schutzkappe	Tapa	
C Group	1 03 40–0247	Gasket	Joint	Dichtung	Empaquetadura	
C Group	1 02 40–0248	Screw	Vis	Schraube	Tornillo	2
C Group	1 04 40–3150	Woodruff Key	Clavette Woodruff	Rundkeil	Chaveta Woodruff	
C Group	1 33 40–3201	Clutch Sleeve	Manchon de l'embrayage	Kupplungsmitnehmer	Manguito de embrague	
C Group	1 43 40–3202	Clutch Spider	Croisillon de l'embrayage	Kupplungskreuz	Estrella de embrague	
C Group	1 57 40–3203	Clutch Chainwheel	Couronne d'embrayage	Kupplungskettenrad	Piñón de cadena del embrague	
C Group	1 03 40–3206	Roller	Rouleau	Rolle	Rodillo	24
C Group	1 34 40–3207	Retaining Plate (inner)	Plaque arrêtoir (intérieur)	Haltescheibe (Innen)	Placa retenedora (interior)	
C Group	1 30 40–3210	Retaining Plate (outer)	Plaque arrêtoir (extérieur)	Haltescheibe (Aussen)	Placa retenedora (exterior)	
C Group	1 05 40–3211	Screw	Vis	Schraube	Tornillo	4
C Group	1 06 40 3212	Rubber Pad	Tampon caoutchouc	Gummiauflage	Cojin de goma	4
C Group	1 04 40–3213	Rubber Buffer	Butée caoutchouc	Gummipuffer	Tope de goma	4
C Group	1 43 40–3214	Clutch Centre	Moyeux d'embrayage	Kupplungsnabe	Cubo de embrague	
C Group	1 06 40–3218	Spring Cup	Siège de ressort	Federhülse	Copa	4
C Group	1 09 40–3219	Nut	Ecrou	Mutter	Tuerca	4
C Group	1 16 40–3220	Driven Plate	Disque entraîne	Reibscheibe	Disco accionado	5
C Group	1 02 40–3221	Lockwasher	Rondelle frein	Sicherungsscheibe	Freno	
C Group	1 24 40–3222	Clutch Pressure Plate	Disque extérieur d'embrayage	Aussere Kupplungsdruckplatte	Disco exterior del embrague	
C Group	1 11 40–3227	Nut	Ecrou	Mutter	Tuerca	
C Group	1 09 40–3228	Washer	Rondelle	Scheibe	Arandela	
C Group	1 06 40–3230	Screw	Vis	Schraube	Tornillo	
C Group	1 03 40–3231	Spring	Ressort	Feder	Resorte	4
C Group	1 19 40–3233	Driving Plate	Disque entraînement	Mitnehmerplatte	Placa de manda	4
C15 Scrambles (1961)	1 43 41–3209	Clutch Spider	Croisillon de l'embrayage	Kupplungskreuz	Estrella de embrague	
C15 Scrambles (1961)	1 41 41–3210	Clutch Centre	Moyeux d'embrayage	Kupplungsnabe	Cubo de embrague	
C15 Scrambles (1961)	1 06 41–3211	Rubber Pad	Tampon caoutchouc	Gummiauflage	Cojin de goma	8
C Group	1 01 67–1709	Sealing Ring	Bague d'étanchéité	Dichtung	Junta	2

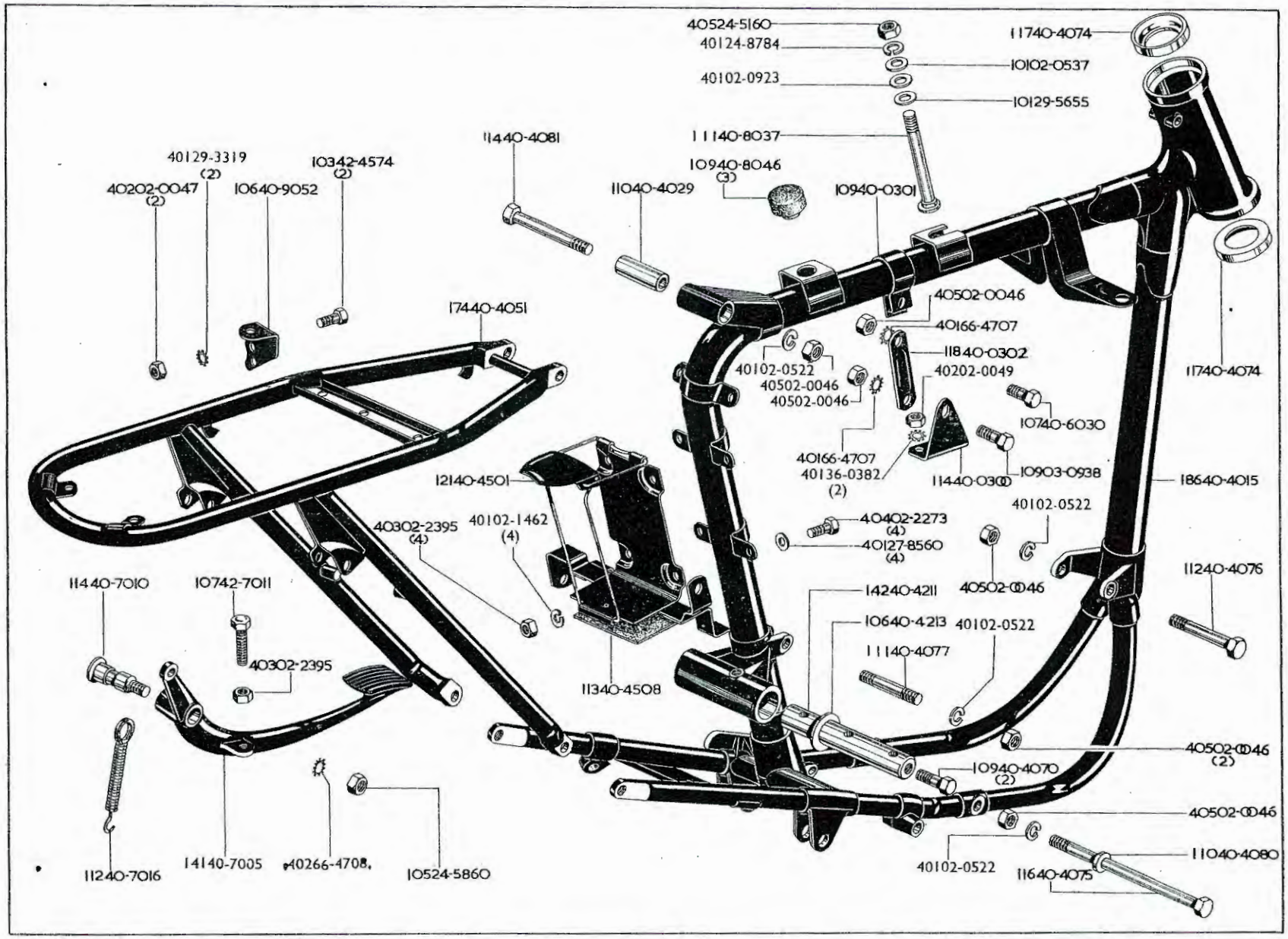

FRAME BRAKE PEDAL BATTERY HOLDER

FRAME
CADRE
RAHMEN
CUADRO

BRAKE PEDAL
PEDALE DE FRIEN
FUSSBREMSHEBEL
PEDAL DE FRENO

BATTERY HOLDER
SUPPORT DE BATTERIE
BATTERIEHALTER
PORTA-BATERIA

Model Modèle Typen Modelos		Spares No. No. de pièce Ersatzteil-nr No. de repuesto	Description	Designation	Beschreibung	Descripción	Per Set Par jeu Pr. Satz Juego de
C15 Standard	...	1 86 40–4015	Frame Front	Cadre av	Vorderrahmen	Cuadro delantera	
C15 Standard	...	1 74 40–4051	Rear Sub Frame	Cadre ar	Hinterrahme	Cuadro trasera	
C15 Standard	...	4 05 02–0046	Nut	Ecrou	Mutter	Tuerca	7
C15 Standard	...	4 02 02–0047	Nut	Ecrou	Mutter	Tuerca	2
C15 Standard	...	4 05 02–0049	Nut	Ecrou	Mutter	Tuerca	2
C15 Standard	...	4 01 02–0522	Lockwasher	Rondelle frein	Sicherungsscheibe	Freno	4
C15 Standard	...	1 01 02–0537	Washer	Rondelle	Scheibe	Arandela	
C15 Standard	...	4 01 02–0923	Washer	Rondelle	Scheibe	Arandela	
C15 Standard	...	4 01 02–1462	Lockwasher	Rondelle frein	Sicherungsscheibe	Freno	4
C15 Standard	...	4 04 02–2273	Bolt	Boulon	Schraube	Tornillo	4
C15 Standard	...	4 03 02–2395	Nut	Ecrou	Mutter	Tuerca	5
C15 Standard	...	1 09 03–0938	Bolt	Boulon	Schraube	Tornillo	
C15 Standard	...	4 05 24–5160	Nut	Ecrou	Mutter	Tuerca	
C15 Standard	...	1 05 24–5860	Nut	Ecrou	Mutter	Tuerca	
C15 Standard	...	4 01 24–8784	Lockwasher	Rondelle frein	Sicherungsscheibe	Freno	
C15 Standard	...	4 01 27–8560	Washer	Rondelle	Scheibe	Arandela	4
C15 Standard	...	4 01 29–3319	Lockwasher	Rondelle frein	Sicherungsscheibe	Freno	
C15 Standard	...	1 01 29–5655	Washer	Rondelle	Scheibe	Arandela	
C15 Standard	...	4 01 36–0382	Lockwasher	Rondelle frein	Sicherungsscheibe	Freno	2
C15 Standard	...	1 14 40–0300	Bracket	Bride	Verstrebung	Soporte	
C15 Standard	...	4 09 40–0301	Clip	Bride	Klammer	Grapa	
C15 Standard	...	1 18 40–0302	Stay	Tringle	Strebe	Tirante	
C15 Standard	...	1 10 40–4029	Spacer Tube	Tube entretoise	Distanzrohr	Tubo espaciador	
C15 Standard	...	1 09 40–4070	Bolt	Boulon	Schraube	Tornillo	2
C15 Standard	...	1 17 40–4074	Bearing Cup	Cuvette de roulement	Lagerschale	Copa de rolamiento	2
C15 Standard	...	1 16 40–4075	Bolt	Boulon	Schraube	Tornillo	
C15 Standard	...	1 12 40–4076	Bolt	Boulon	Schraube	Tornillo	
C15 Standard	...	1 11 40–4077	Stud	Goujon	Stehbolzen	Esparago	
C15 Standard	...	1 10 40–4080	Spacer Bush	Bague entretoise	Distanzbüchse	Anillo espaciador	
C15 Standard	...	1 14 40–4081	Bolt	Boulon	Schraube	Tornillo	
C15 Standard	...	1 42 40–4211	Spindle	Arbre	Welle	Arbol	
C15 Standard	...	1 06 40–4213	Washer	Rondelle	Scheibe	Arandela	
C15 Standard	...	1 21 40–4501	Battery Holder	Support de batterie	Batteriehalter	Porta-bateria	
C15 Standard	...	1 13 40–4508	Rubber Pad	Tampon caoutchouc	Gummiauflage	Cojin de goma	
C15 Standard	...	1 07 40–6030	Bolt	Boulon	Schraube	Tornillo	
C15 Standard	...	1 41 40–7005	Brake Pedal	Pédale de frein	Fussbremshebel	Pedal de freno	
C15 Standard	...	1 14 40–7010	Pivot Pin	Axe	Bolzen	Eje	
C15 Standard	...	1 12 40–7016	Spring	Resort	Feder	Resorte	
C15 Standard	...	1 11 40–8037	Bolt	Boulon	Schraube	Tornillo	
C15 Standard	...	1 09 40–8046	Rubber Buffer	Butée caoutchouc	Gummipuffer	Tope de goma	3
C15 Standard	...	1 06 40–9052	Bracket	Support	Verstrebung	Soporte	
C15 Standard	...	1 03 42–4574	Bolt	Boulon	Schraube	Tornillo	2
C15 Standard	...	1 07 42–7011	Bolt	Boulon	Schraube	Tornillo	
C15 Standard	...	4 01 66–4707	Lockwasher	Rondelle frein	Sicherungsscheibe	Freno	2
C15 Standard	...	4 02 66–4708	Lockwasher	Rondelle frein	Sicherungsscheibe	Freno	

14 15 16 17 18 19 20 8 21 9 22 10 23 11 24 12 25 13 26

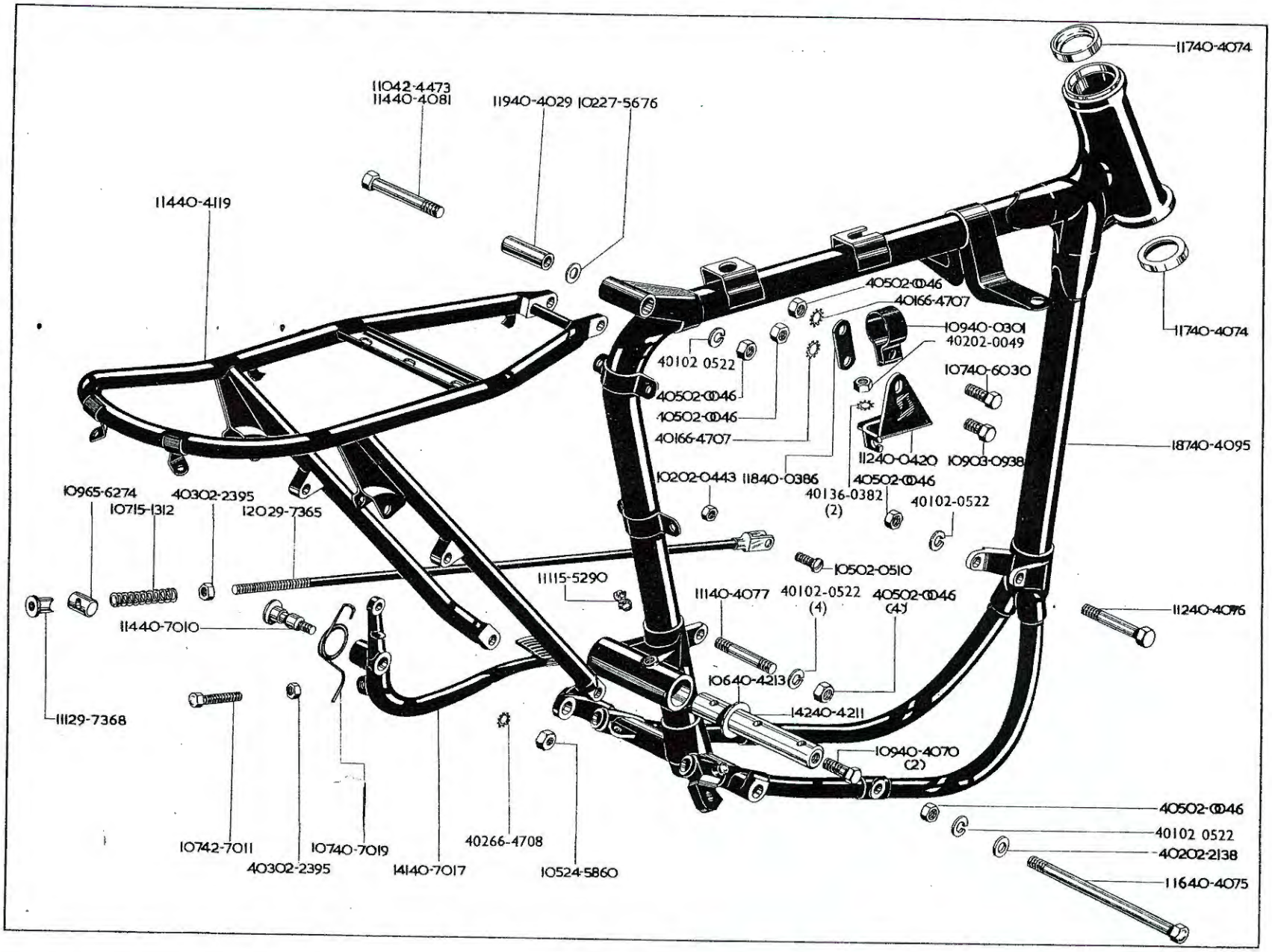

FRAME BRAKE PEDAL

FRAME
CADRE
RAHMEN
CUADRO

BRAKE PEDAL
PÉDALE DE FREIN
FUSSBREMSHEBEL
PEDAL DE FRENO

Model Modèle Typen Modelos	Spares No. No. de pièce Ersatzteil-nr No. de repuesto	Description	Designation	Beschreibung	Descripción	Per Set Par jeu Pr. Satz Juego de
C15 Competition ...	1 87 40–4095	Frame Front	Cadre av	Vorderrahme	Cuadro delantera	
C15 Competition ...	1 74 40–4119	Rear Sub Frame	Cadre ar	Hinterrad	Cuadro trasera	
C15 Competition ...	4 05 02–0046	Nut	Ecrou	Mutter	Tuerca	9
C15 Competition ...	4 02 02–0049	Nut	Ecrou	Mutter	Tuerca	2
C15 Competition ...	1 02 02–0443	Nut	Ecrou	Mutter	Tuerca	
C15 Competition ...	1 05 02–0510	Screw	Vis	Schraube	Tornillo	
C15 Competition ...	4 01 02–0522	Lockwasher	Rondelle frein	Sicherungsscheibe	Freno	4
C15 Competition ...	4 02 02–2138	Washer	Rondelle	Scheibe	Arandela	
C15 Competition ...	4 03 02–2395	Nut	Ecrou	Mutter	Tuerca	2
C15 Competition ...	1 09 03–0938	Bolt	Boulon	Schraube	Tornillo	
C15 Competition ...	1 07 15–1312	Spring	Ressort	Feder	Resorte	
C15 Competition ...	1 11 15–5290	Grease Nipple	Graisseur	Schmiernippel	Engrasador	
C15 Competition ...	1 05 24–5860	Nut	Ecrou	Mutter	Tuerca	
C15 Competition ...	1 02 27–5676	Washer	Rondelle	Scheibe	Arandela	
C15 Competition ...	1 20 29–7365	Brake Rod	Tringle de frein	Bremsstange	Tirante de freno	
C15 Competition ...	1 11 29–7368	Adjuster Nut	Ecrou de réglage	Stellmutter	Tuerca de ajuste	
C15 Competition ...	4 01 36–0382	Lockwasher	Rondelle frein	Sicherungsscheibe	Freno	2
C15 Competition ...	1 09 40–0301	Clip	Bride	Klammer	Grapa	
C15 Trials, Scrambles	1 18 40–0386	Stay	Tringle	Strebe	Tirante	
C15 Trials, Scrambles	1 12 40–0420	Bracket	Support	Verstrebung	Soporte	
C15 Competition ...	1 10 40–4029	Spacer Tube	Tube entretoise	Distanzrohr	Tubo espaciador	
C15 Competition ...	1 09 40–4070	Bolt	Boulon	Schraube	Tornillo	2
C15 Competition ...	1 17 40–4074	Bearing Cup	Cuvette de roulement	Lagerschale	Copa de rolamiento	2
C15 Competition ...	1 16 40–4075	Bolt	Boulon	Schraube	Tornillo	
C15 Competition ...	1 12 40–4076	Bolt	Boulon	Schraube	Tornillo	
C15 Competition ...	1 11 40–4077	Stud	Goujon	Stehbolzen	Esparago	
C15 Competition ...	1 14 40–4081	Bolt	Boulon	Schraube	Tornillo	
C15 Competition ...	1 42 40–4211	Spindle	Arbre	Welle	Arbol	
C15 Competition ...	1 06 40–4213	Washer	Rondelle	Scheibe	Arandela	
C15 Competition ...	1 07 40–6030	Bolt	Boulon	Schraube	Tornillo	
C15 Competition ...	1 14 40–7010	Pivot Pin	Axe	Drehzapfen	Eje	
C15 Competition ...	1 41 40–7017	Brake Pedal	Pédale de frein	Fussbremshebel	Pedal de freno	
C15 Competition ...	1 07 40–7019	Spring	Ressort	Feder	Resorte	
C15 Competition ...	1 10 42–4473	Bolt	Boulon	Schraube	Tornillo	
C15 Competition ...	1 07 42–7011	Adjuster Screw	Vis de réglage	Einstellschraube	Tornillo de ajuste	
C15 Competition ...	1 09 65–6274	Swivel Pin	Tourillon, simple	Stift	Esparago	
C15 Competition ...	4 01 66–4707	Lockwasher	Rondelle frein	Sicherungsscheibe	Freno	2
C15 Competition ...	4 02 66–4708	Lockwasher	Rondelle frein	Sicherungsscheibe	Freno	

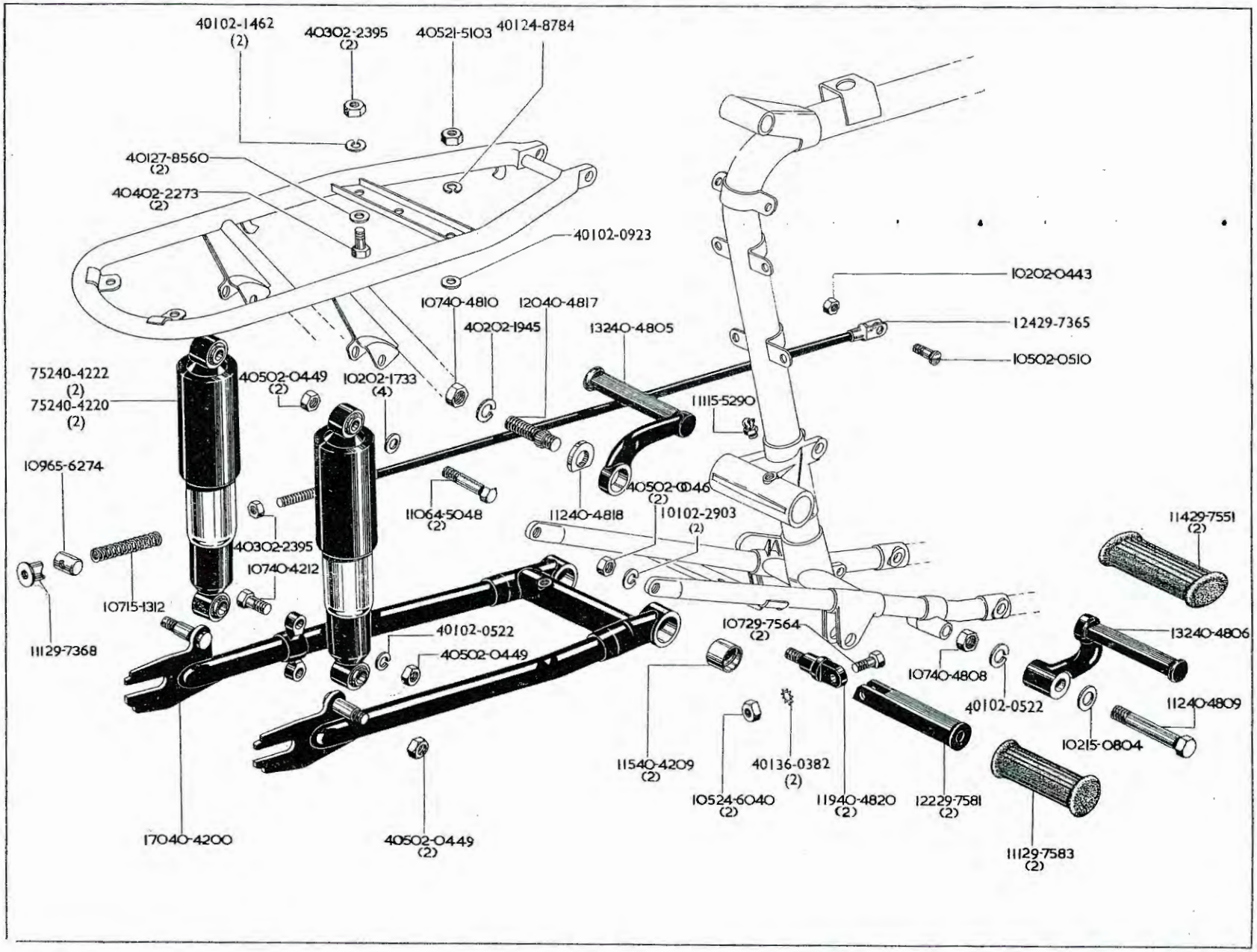
40102-1462 (2)
40302-2395 (2)
40521-5103
40124-8784
40127-8560 (2)
40402-2273 (2)
40102-0923
10202-0443
10740-4810
12040-4817
40202-1945
13240-4805
12429-7365
10502-0510
75240-4222 (2)
75240-4220 (2)
40502-0449 (2)
10202-1733 (4)
11115-5290
10965-6274
40502-0046 (2)
11064-5048 (2)
11240-4818
10102-2903 (2)
11429-7551 (2)
40302-2395
10740-4212
10715-1312
10729-7564 (2)
13240-4806
11129-7368
40102-0522
40502-0449
10740-4808
40102-0522
11240-4809
10215-0804
11540-4209 (2)
40136-0382 (2)
10524-6040 (2)
11940-4820 (2)
12229-7581 (2)
17040-4200
40502-0449 (2)
11129-7583 (2)

SWINGING ARM
BRAS OSCILLANT
SCHWINGARM
HORQUILLA OSCILLANT

FOOTRESTS
REPOSE-PIED
FUSSRASTEN
DESCANSA-PIE

Model Modèle Typen Modelos	Spares No. No. de pièce Ersatzteil-nr No. de repuesto	Description	Designation	Beschreibung	Descripción	Per Set Par jeu Pr. Satz Juego de
C15 Standard ...	4 05 02–0046	Nut	Ecrou	Mutter	Tuerca	2
C15 Standard ...	1 02 02–0443	Nut	Ecrou	Mutter	Tuerca	
C15 Standard ...	4 05 02–0449	Nut	Ecrou	Mutter	Tuerca	5
C15 Standard ...	1 05 02–0510	Screw	Vis	Schraube	Tornillo	
C15 Standard ...	4 01 02–0522	Lockwasher	Rondelle frein	Sicherungsscheibe	Freno	2
C15 Standard ...	4 01 02–0923	Washer	Rondelle	Scheibe	Arandela	2
C15 Standard ...	4 01 02–1462	Lockwasher	Rondelle frein	Sicherungsscheibe	Freno	2
C15 Standard ...	1 02 02–1733	Washer	Rondelle	Scheibe	Arandela	4
C15 Standard ...	4 02 02–1945	Washer	Rondelle	Scheibe	Arandela	
C15 Standard ...	4 04 02–2273	Bolt	Boulon	Schraube	Tornillo	2
C15 Standard ...	4 03 02–2395	Nut	Ecrou	Mutter	Tuerca	3
C15 Standard ...	1 01 02–2903	Lockwasher	Rondelle frein	Sicherungsscheibe	Tornillo	2
C15 Standard ...	1 02 15–0804	Washer	Rondelle	Scheibe	Arandela	
C15 Standard ...	1 07 15–1312	Spring	Ressort	Feder	Resorte	
C15 Standard ...	1 11 15–5290	Grease Nipple	Graisseur	Schmiernippel	Engrasador	
C15 Standard ...	4 05 21–5103	Nut	Ecrou	Mutter	Tuerca	
C15 Standard ...	1 05 24–6040	Nut	Ecrou	Mutter	Tuerca	2
C15 Standard ...	4 01 24–8784	Lockwasher	Rondelle frein	Sicherungsscheibe	Freno	
C15 Standard ...	4 01 27–8560	Washer	Rondelle	Scheibe	Arandela	2
C15 Standard ...	1 24 29–7365	Brake Rod	Tringle de frein	Bremsstange	Tirante de freno	
C15 Standard ...	1 11 29–7368	Adjuster Nut	Ecrou de réglage	Stellmutter	Tuerca de ajuste	
C15 Standard ...	1 14 29–7551	Rubber Pad	Tampon caoutchouc	Gummiauflage	Cojin de goma	2
C15 Standard ...	1 07 29–7564	Bolt	Boulon	Schraube	Tornillo	2
C15 Standard ...	1 22 29–7581	Pillion Footrest	Repose-pied arrière	Soziusfussraste	Descansa-pie para asiento trasera.	2
C15 Standard ...	1 11 29–7583	Rubber Pad	Tampon caoutchouc	Gummiauflage	Cojin de goma	2
C15 Standard ...	4 01 36–0382	Lockwasher	Rondelle frein	Sicherungsscheibe	Freno	
C15 Standard ...	1 70 40–4200	Swinging Arm	Bras oscillant	Schwingarm	Horquilla oscillante	
C15 Standard ...	1 15 40–4209	Bush	Douille	Büchse	Casquillo	2
C15 Standard ...	1 07 40–4212	Bolt	Boulon	Schraube	Tornillo	
C15 Standard ...	7 52 40–4220	Shock Absorber (56.24 kg.)	Amortisseur (56,24 kg.)	Stossdämpfer (56,24 kg.)	Amortiguador (56,24 kg.)	2
C15 Standard ...	7 52 40–4222	Shock Absorber (62 kg.)	Amortisseur (62 kg.)	Stossdämpfer (62 kg.)	Amortiguador (62 kg.)	2
C15 Standard ...	1 32 40–4805	Footrest (left-hand)	Repose-pied (gauche)	Fussraste (Links)	Descansa-pie (izq.)	
C15 Standard ...	1 32 40–4806	Footrest (right-hand)	Repose-pied (droite)	Fussraste (Rechts)	Descansa-pie (der.)	
C15 Standard ...	1 07 40–4808	Nut	Ecrou	Mutter	Tuerca	
C15 Standard ...	1 12 40–4809	Bolt	Boulon	Schraube	Tornillo	
C15 Standard ...	1 07 40–4810	Nut	Ecrou	Mutter	Tuerca	
C15 Standard ...	1 20 40–4817	Stud	Goujon	Stehbolzen	Esparago	
C15 Standard ...	1 12 40–4818	Locking Plate	Plaque de blocage	Sicherungsscheibe	Placa cerradora	
C15 Standard ...	1 19 40–4820	Anchor Bolt	Boulon d'ancrage	Ankerbolzen	Tornillo de sujeción	2
C15 Standard ...	1 31 40–4822	Pillion Footrest complete	Repose-pied arrière complet	Soziusfussraste Kompl.	Descansa-pie para asiento completa.	
C15 Standard ...	1 10 64–5048	Bolt	Boulon	Schraube	Tornillo	2
C15 Standard ...	1 09 65–6274	Swivel Pin	Tourillon simple	Stift	Esparago	

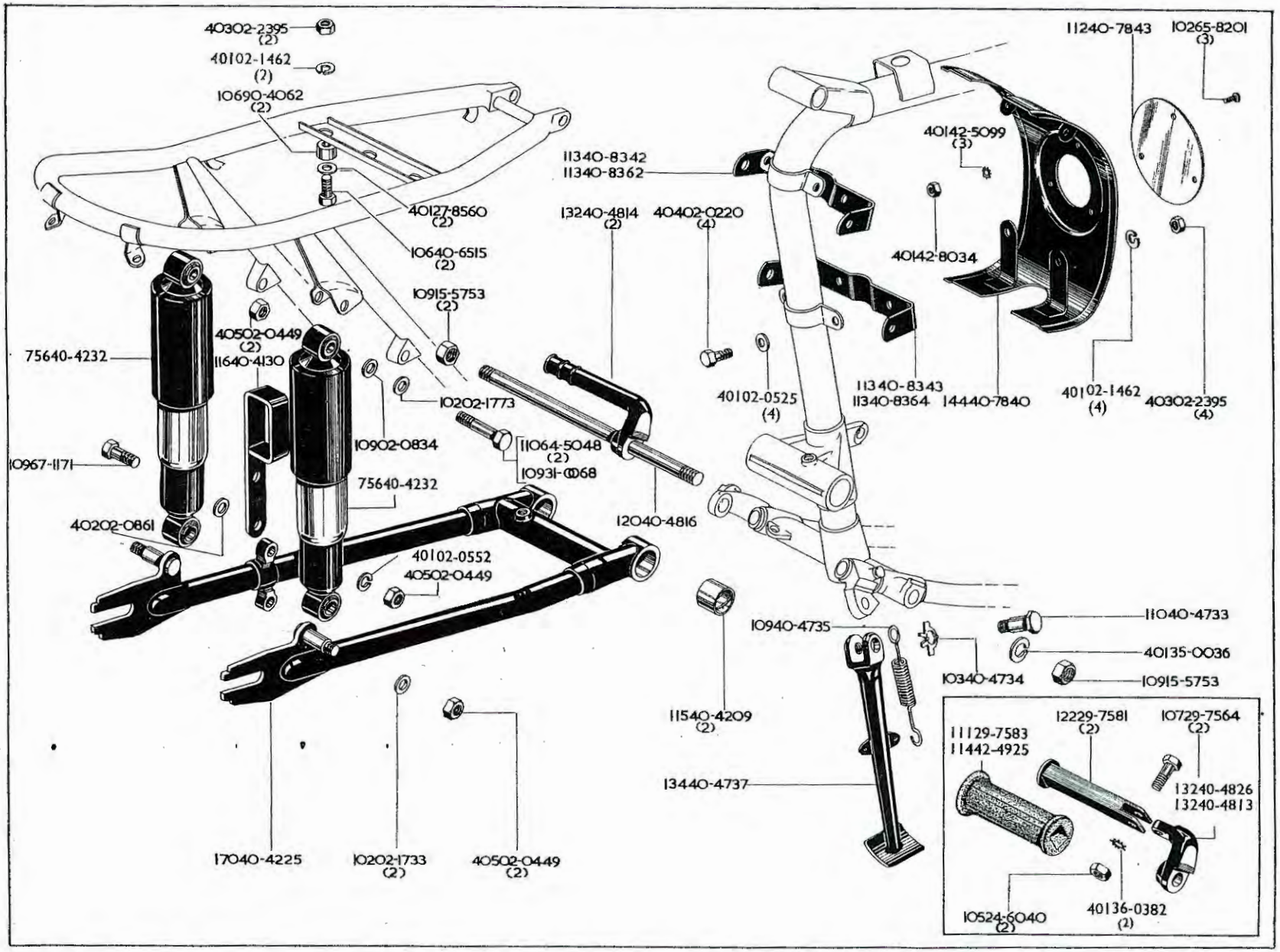

SWINGING ARM SHOCK ABSORBER

SWINGING ARM
BRAS OSCILLANT
SCHWINGARM
HORQUILLA OSCILLANTE

SHOCK ABSORBER
AMORTISSEUR
STOSSDÄMPFER
AMORTIGUADOR

Model Modèle Typen Modelos	Spares No. No. de pièce Ersatzteil-nr No. de repuesto	Description	Designation	Beschreibung	Descripción	Per Set Par jeu Pr. Satz Juego de
C15 Competition ...	4 04 02–0220	Bolt	Boulon	Schraube	Tornillo	4
C15 Competition ...	4 05 02–0449	Nut	Ecrou	Mutter	Tuerca	5
C15 Competition ...	4 01 02–0522	Lockwasher	Rondelle frein	Sicherungsscheibe	Freno	
C15 Competition ...	4 01 02–0525	Washer	Rondelle	Scheibe	Arandela	4
C15 Competition ...	1 09 02–0834	Distance Piece (n/s)	Entretoise (gauche)	Distanzrohr (Links)	Distanciador (izq)	
C15 Competition ...	4 02 02–0861	Washer	Rondelle	Scheibe	Arandela	
C15 Competition ...	4 01 02–1462	Lockwasher	Rondelle frein	Sicherungsscheibe	Freno	6
C15 Competition ...	1 02 02–1733	Washer	Rondelle	Scheibe	Arandela	4
C15 Competition ...	4 03 02–2395	Nut	Ecrou	Mutter	Tuerca	6
C15 Competition ...	1 09 15–5753	Nut	Ecrou	Mutter	Tuerca	2
Road Scrambler ...	1 05 24–6040	Nut	Ecrou	Mutter	Tuerca	2
C15 Competition ...	4 01 27–8560	Washer	Rondelle	Scheibe	Arandela	2
Road Scrambler ...	1 07 29–7564	Bolt	Boulon	Schraube	Tornillo	2
C15 Road Scrambler ...	1 22 29–7581	Footrest	Repose-pied	Fussraste	Descansa-pie	2
Starfire Scrambler ...	1 11 29–7583	Rubber Pad (R/H)	Tampon caoutchouc (Droite)	Gummiauflage (Rechts)	Cojin de goma (Der)	2
Starfire Roadster						
C15 Competition ...	1 09 31–0068	Bolt (n/s)	Boulon (gauche)	Schraube (Links)	Tornillo (izq.)	
C15 Competition ...	4 01 35–0036	Lockwasher	Rondelle frein	Sicherungsscheibe	Freno	
C15 Road Scrambler ...	4 01 36–0382	Lockwasher	Rondelle frein	Sicherungsscheibe	Freno	2
C15 Competition ...	1 16 40–4130	Guide	Guide	Führung	Guia	
C15 Competition ...	1 15 40–4209	Bush	Douille	Büchse	Casquillo	2
C15 Competition ...	1 70 40–4225	Swinging Arm	Bras oscillant	Schwingarm	Horquilla oscillante	
C15 Competition ...	7 56 40–4232	Shock Absorber	Amortisseur	Stossdämpfer	Amortiguador	2
C15 Competition ...	1 10 40–4733	Bolt	Boulon	Schraube	Tornillo	
C15 Competition ...	1 03 40–4734	Lockwasher	Rondelle frein	Sicherungsscheibe	Freno	
C15 Competition ...	1 09 40–4735	Spring	Ressort	Feder	Resorte	
C15 Competition ...	1 34 40–4737	Prop Stand	Béquille latérale	Seitenstütze	Muleta lateral	
C15 Starfire Scrambler	1 32 40–4813	Bracket (American type) (N/S)	Support (type American) (Gauche)	Verstrebung (Amerikanischen Typs). (Links)	Soporte (tipo Americano) (Izq)	1 2
Starfire Roadster						
C15 Competition ...	1 32 40–4814	Footrest	Repose-pied	Fussraste	Descansa-pie	
C15 Competition ...	1 20 40–4816	Stud	Goujon	Stehbolzen	Esparago	2
Starfire Roadster ...	1 32 40–4826	Bracket (American type) O/S	Support (Type American) (Droite)	Verstrebung (Amerikanischen typs) (Rechts)	Soporte (Tipo Americano) (Der)	
Starfire Scrambler						
C15 Competition ...	1 06 40–6515	Bolt	Boulon	Schraube	Tornillo	
C15 Competition ...	1 44 40–7840	Cover Plate	Plaque couvercle	Abdeckplatte	Tapa del cojinete	
C15 Scrambles ...	1 12 40–7843	Plate	Plaque	Scheibe	Placa	
C15 Competition ...	1 13 40–8342	Bracket (top)	Support (dessus)	Verstrebung (Oben)	Soporte (superior)	
C15 Competition ...	1 13 40–8343	Bracket (bottom)	Support (inférieure)	Verstrebung (Unten)	Soporte (inferior)	
C15 Competition ...	1 13 40–8362*	Bracket (top)	Support (dessus)	Verstrebung (Oben)	Soporte (superior)	
C15 Competition ...	1 13 40–8364*	Bracket (bottom)	Support (inférieure)	Verstrebung (Unetn)	Soporte (inferior)	
Starfire Scrambler ...	1 14 42–4925	Rubber Pad	Tampon caoutchouc	Gummiauflage	Cojin de goma	2
Starfire Roadster						
Starfire Scrambler ...	1 22 42–4927	Footrest complete	Repose-pied complet	Fussraste Kompl.	Descansa-pie completa	2
C15 Trials	4 01 42–5099	Lockwasher	Rondelle frein	Sicherungsscheibe	Freno	3
C15 Trials	4 01 42–8034	Nut	Ec ou	Mutter	Tuerca	3
C15 Competition ...	1 10 64–5048	Bolt	Boulon	Schraube	Tornillo	3
C15 Trials	1 02 65–8201	Screw	Vis	Schraube	Tornillo	3
C15 Competition ...	1 09 67–1171	Bolt	Boulon	Schraube	Tornillo	
C15 Competition ...	1 06 90–4062	Distance Piece	Entretoise	Distanzrohr	Distanciador	

*Fitted on and after Frame No. 2325.

*Montée depuis cadre numéro 2325.

*Nach Rahmennummer 2325 Montiert.

*Montada después de cuadro numero 2325.

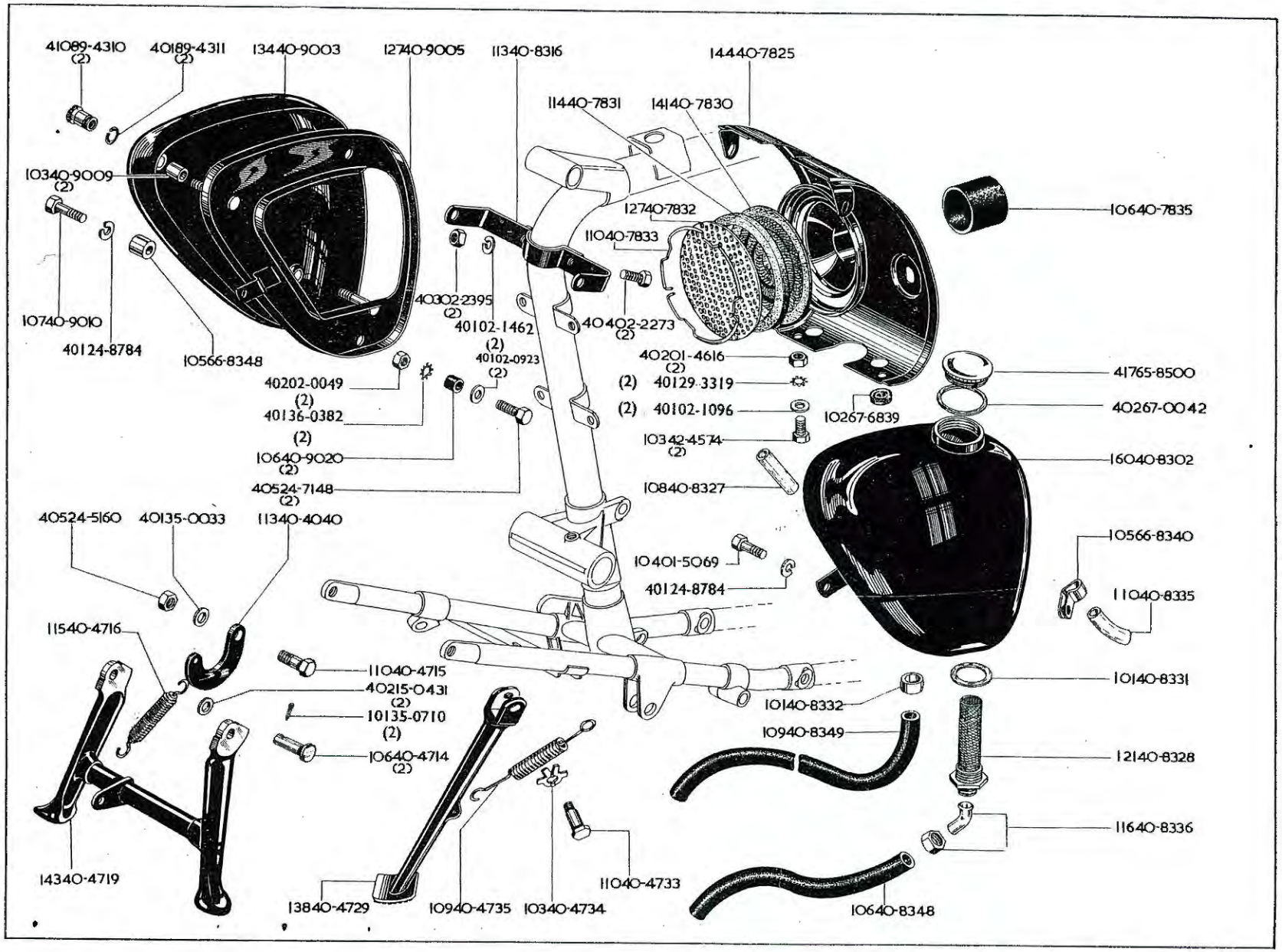

OIL TANK
RÉSERVOIR D'HUILE

TOOLBOX
BOÎTE À OUTILS

COVER PLATE
PLAQUE COUVERCLE

OIL TANK / RÉSERVOIR D'HUILE / ÖLTANK / DEPOSITO DE ACEITE

TOOLBOX / BOÎTE À OUTILS / WERKZEUGKASTEN / CAJA DE HERRAMIENTOS

COVER PLATE / PLAQUE COUVERCLE / ABDECKPLATTE / TAPA DEL COJINETE

Model / Modèle / Typen / Modelos	Spares No. / No. de pièce / Ersatzteil-nr / No. de repuesto	Description	Designation	Beschreibung	Descripción	Per Set / Par jeu / Pr. Satz / Juego de
C15 Standard ...	4 02 01-4616	Nut	Ecrou	Mutter	Tuerca	2
C15 Standard ...	1 04 01-5069	Bolt	Boulon	Schraube	Tornillo	3
C15 Standard ...	4 02 02-0049	Nut	Ecrou	Mutter	Tuerca	2
C15 Standard ...	4 01 02-0923	Washer	Rondelle	Scheibe	Arandela	2
C15 Standard ...	4 01 02-1096	Washer	Rondelle	Scheibe	Arandela	2
C15 Standard ...	4 01 02-1462	Lockwasher	Rondelle frein	Sicherungsscheibe	Freno	
C15 Standard ...	4 04 02-2273	Bolt	Boulon	Schraube	Tornillo	2
C15 Standard ...	4 03 02-2395	Nut	Ecrou	Mutter	Tuerca	2
C15 Standard ...	4 02 15-0431	Washer	Rondelle	Scheibe	Arandela	2
C15 Standard ...	4 05 24-5160	Nut	Ecrou	Mutter	Tuerca	
C15 Standard ...	4 05 24-7148	Bolt	Boulon	Schraube	Tornillo	2
C15 Standard ...	4 01 24-8784	Lockwasher	Rondelle frein	Sicherungsscheibe	Freno	2
C15 Standard ...	4 01 29-3319	Lockwasher	Rondelle frein	Sicherungsscheibe	Freno	
C15 Standard ...	4 01 35-0033	Washer	Rondelle	Scheibe	Arandela	
C15 Standard ...	1 01 35-0710	Split Pin	Goupille fendue	Splint	Chaveta hendida	2
C15 Standard ...	4 01 36-0382	Lockwasher	Rondelle frein	Sicherungsscheibe	Freno	
C15 Standard ...	1 13 40-4040	Anchor Plate	Support	Ankerplatte	Soporte	
C15 Standard ...	1 06 40-4714	Pivot Pin	Axe	Drehzapfen	Eje	2
C15 Standard ...	1 10 40-4715	Bolt	Boulon	Schraube	Tornillo	
C15 Standard ...	1 15 40-4716	Spring	Ressort	Feder	Resorte	
C15 Standard ...	1 42 40-4719	Centre Stand	Béquille centrale	Mittelständer	Muleta	
C15 Standard ...	1 38 40-4729	Prop Stand	Béquille latérale	Seitenstütze	Muleta lateral	
C15 Standard ...	1 10 40-4733	Pivot Pin	Axe	Drehzapfen	Eje	
C15 Standard ...	1 03 40-4734	Lockwasher	Rondelle frein	Sicherungsscheibe	Freno	
C15 Standard ...	1 09 40-4735	Spring	Ressort	Feder	Resorte	
C15 Standard ...	1 44 40-7825	Cover Plate	Plaque couvercle	Abdeckplatte	Tapa del cojinete	
C15 Standard ...	1 41 40-7830	Air Filter Element	Elément de filtre à air	Luftfiltereinsatz	Guarnición del filtro	
C15 Standard ...	1 14 40-7831	Rubber Ring	Bague caoutchouc	Gummiring	Anillo de goma	
C15 Standard ...	1 27 40-7832	Filter Gauze	Gaze du filtre	Filtergaze	Gasa de filtro	
C15 Standard ...	1 10 40-7833	Circlip	Circlip	Sprengring	Freno	
C15 Standard ...	1 06 40-7835	Rubber Sleeve	Douille caoutchouc	Gummimuffe	Manguita de goma	
C15 Standard ...	1 60 40-8302	Oil Tank	Reservoir d'huile	Öltank	Deposito de aceite	
C15 Standard ...	1 13 40-8316	Bracket	Support	Verstrebung	Soporte	
C15 Standard ...	1 08 40-8327	Rubber Sleeve	Douille caoutchouc	Gummimuffe	Manguita de goma	
C15 Standard ...	1 21 40-8328	Oil Tank Filter	Filtre du réservoir à huile	Öltankfilter	Filtro del depósito de aceite	
C15 Standard ...	1 01 40-8331	Sealing Washer	Joint d'étanchéité	Dichtung	Arandela de reten	
C15 Standard ...	1 01 40-8332	Ferrule	Virole	Huelse	Virola	
C15 Standard ...	1 10 40-8335	Oil Pipe	Conduit ou canialsation d'huile	Ölleitung	Conección de engrase	
C15 Standard ...	1 16 40-8336	Oil Feed Union	Raccord d'alimentation d'huile	Ölzufuhrverbindung	Union de la tuberia de alimentación de aceite.	
C15 Standard ...	1 06 40-8348	Oil Feed Pipe	Tuyauterie d'alimentation d'huile	Ölzufuhrleitung	Tubo de alimentación de aceite	
C15 Standard ...	1 09 40-8349	Oil Return Pipe	Tuyauterie deaetour d'huile	Ölrücklaufleitung	Tubo de retorno de aceite	
C15 Standard ...	1 34 40-9003	Tool Box Cover	Couvercle de la boite à outils	Werkzeugkastendeckel	Tapa de la caja de herramientos	
C15 Standard ...	1 27 40-9005	Back Plate	Plaque arrière	Hintere Platte	Placa trasera	
C15 Standard ...	1 03 40-9009	Spacer Bush	Bague entretoise	Distanzbüchse	Anillo espaciador	2
C15 Standard ...	1 07 40-9010	Bolt	Boulon	Schraube	Tornillo	
C15 Standard ...	1 06 40-9020	Rubber Sleeve	Douille caoutchouc	Gummimuffe	Manguita de goma	2
C15 Standard ...	1 03 42-4574	Bolt	Boulon	Schraube	Tornillo	2
C15 Standard ...	4 17 65-8500	Filler Cap	Bouchon de remplissage	Verschlusskappe	Tapa	
C15 Standard ...	1 05 66-8340	Clip	Bride	Klammer	Grapa	
C15 Standard ...	1 05 66-8348	Spacer Bush	Bague entretoise	Distanzbüchse	Anillo espaciador	
C15 Standard ...	4 02 67-0042	Sealing Washer	Joint d'étanchéité	Dichtung	Arandela de reten	
C15 Standard ...	1 02 67-6839	Grommet	Rondelle capuchon	Tülle	Manguera	
C15 Standard ...	4 10 89-4310	Nut	Ecrou	Mutter	Tuerca	2
C15 Standard ...	4 01 89-4311	Circlip	Circlip	Sprengring	Freno	2

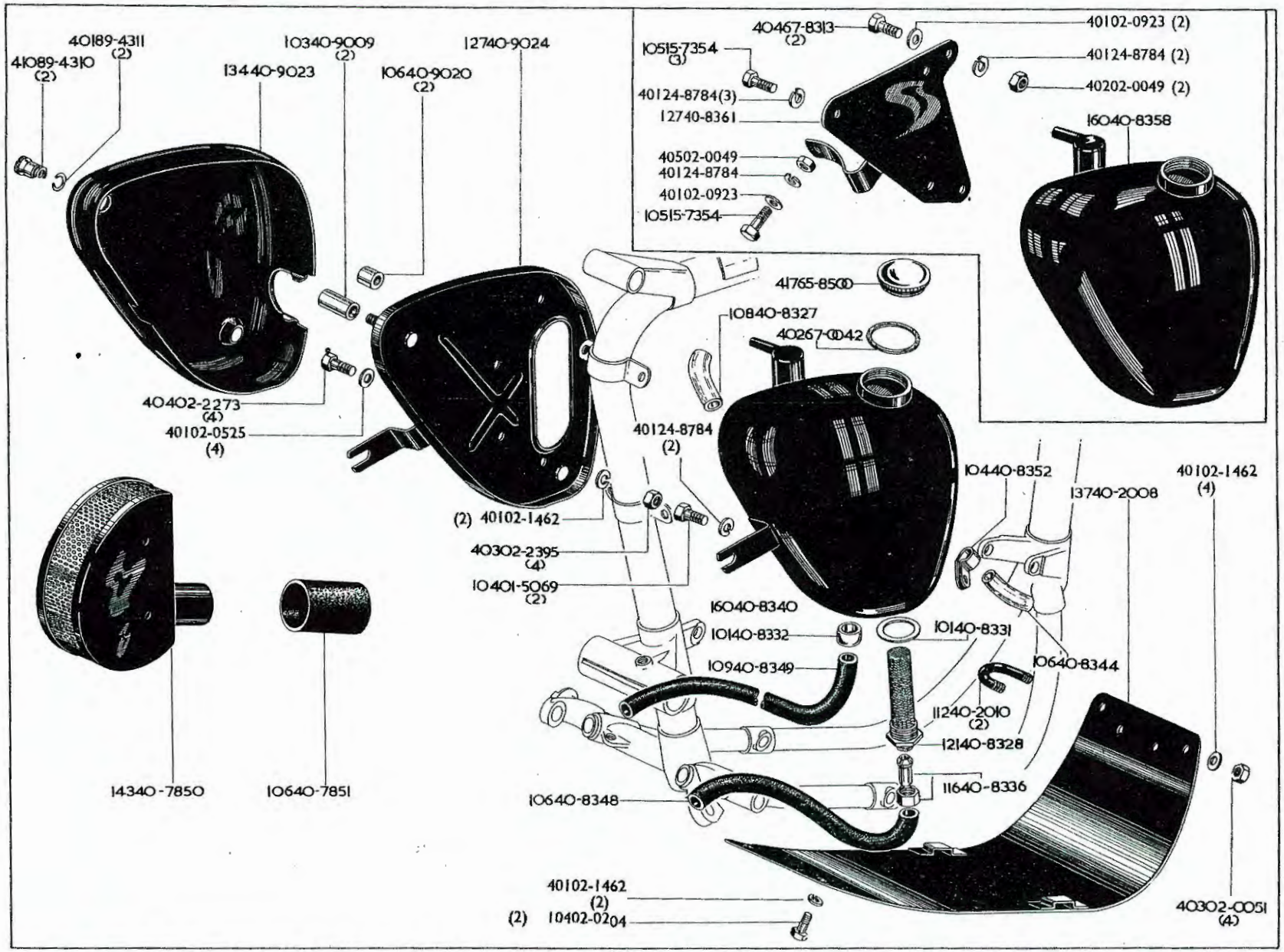
40189-4311
(2)
41089-4310
(2)
13440-9023
10340-9009
(2)
10640-9020
(2)
12740-9024
40402-2273
(4)
40102-0525
(4)
14340-7850
10640-7851
40467-8313
(2)
40102-0923 (2)
10515-7354
(3)
40124-8784 (2)
40124-8784(3)
40202-0049 (2)
12740-8361
16040-8358
40502-0049
40124-8784
40102-0923
10515-7354
41765-8500
10840-8327
40267-0042
40124-8784
(2)
10440-8352
13740-2008
40102-1462
(4)
(2) 40102-1462
40302-2395
(4)
10401-5069
(2)
16040-8340
10140-8332
10140-8331
10940-8349
10640-8344
11240-2010
(2)
12140-8328
11640-8336
10640-8348
40102-1462
(2)
(2) 10402-0204
40302-0051
(4)

OIL TANK
RÉSERVOIR D'HUILE
ÖLTANK
DEPOSITO DE ACEITE

AIR FILTER
FILTRE À AIR
LUFTFILTER
FILTRO DE AIRE

Model Modèle Typen Modelos	Spares No. No. de pièce Ersatzteil-nr No. de repuesto	Description	Designation	Beschreibung	Descripción	Per Set Par jeu Pr Satz. Juego de
C15 Competition ...	1 **04** 01–5069	Bolt	Boulon	Schraube	Tornillo	2
C15 Competition ...	4 **02** 02–0049	Nut	Ecrou	Mutter	Tuerca	3
C15 Competition ...	4 **03** 02–0051	Nut	Ecrou	Mutter	Tuerca	4
C15 Competition ...	1 **04** 02–0204	Bolt	Boulon	Schraube	Tornillo	2
C15 Competition ...	4 **01** 02–0525	Washer	Rondelle	Scheibe	Arandela	4
C15 Competition ...	4 **01** 02–0923	Washer	Rondelle	Scheibe	Arandela	3
C15 Competition ...	4 **01** 02–1462	Lockwasher	Rondelle frein	Sicherungsscheibe	Freno	10
C15 Competition ...	4 **04** 02–2273	Bolt	Boulon	Schraube	Tornillo	4
C15 Competition ...	4 **03** 02–2395	Nut	Ecrou	Mutter	Tuerca	4
C15 Competition ...	1 **05** 15–7354	Bolt	Boulon	Schraube	Tornillo	4
C15 Competition ...	4 **01** 24–8784	Lockwasher	Rondelle frein	Sicherungsscheibe	Freno	8
C15 Competition ...	1 **37** 40–2008	Cover Plate	Plaque couvercle	Abdeckplatte	Tapa del cojinete	
C15 Competition ...	1 **12** 40–2010	"U" Bolt	Boulon "U"	"U" Schraube	Tornillo "U"	2
C15 Competition ...	1 **43** 40–7850	Air Filter	Filtre à air	Luftfilter	Filtro de aire	
C15 Competition ...	1 **06** 40–7851	Rubber Sleeve	Douille caoutchouc	Gummimuffe	Manguita de goma	
C15 Competition ...	1 **08** 40–8327	Rubber Sleeve	Douille caoutchouc	Gummimuffe	Manguita de goma	
C15 Competition ...	1 **21** 40–8328	Oil Tank Filter	Filtre du réservoir à huile	Öltankfilter	Filtro del deposito de aceite	
C15 Competition ...	1 **01** 40–8331	Sealing Washer	Joint d'étanchéité	Dichtung	Arandela de reten	
C15 Competition ...	1 **01** 40–8332	Ferrule	Virole	Huelse	Virola	
C15 Competition ...	1 **16** 40–8336	Connector	Connexion	Verbinder	Conector	
C15 Competition ...	1 **60** 40–8340	Oil Tank	Réservoir d'huile	Öltank	Deposito de aceite	
C15 Competition ...	1 **06** 40–8344	Oil Pipe	Conduit d'huile	Ölleitung	Conección de engrase	
C15 Competition ...	1 **06** 40–8348	Oil Feed Pipe	Tuyauterie d'alimentation d'huile	Ölzufuhrleitung	Tubo de alimentación de aceite	
C15 Competition ...	1 **09** 40–8349	Oil Return Pipe	Tuyauterie de retour d'huile	Ölrücklaufeitung	Tubo de retorno de aceite	
C15 Competition ...	1 **04** 40–8352	Clip	Bride	Klammer	Grapa	
C15 Competition ...	1 **60** 40–8358*	Oil Tank	Réservior d'huile	Öltank	Deposito de aceite	
C15 Competition ...	1 **27** 40–8361*	Support Bracket	Support	Halter	Soporte	
C15 Competition ...	1 **03** 40–9009	Distance Piece	Entretoise	Distanzrohr	Distanciador	2
C15 Competition ...	1 **06** 40–9020	Rubber Sleeve	Douille caoutchouc	Gummimuffe	Manguita de goma	2
C15 Competition ...	1 **34** 40–9023	Cover	Couvercle	Schutzkappe	Tapa	
C15 Competition ...	1 **27** 40–9024	Back Plate	Plaque arrière	Hintereplatte	Placa trasera	
C15 Competition ...	4 **17** 65–8500	Filler Cap	Bouchon de remplissage	Verschlusskappe	Tapa	
C15 Competition ...	4 **02** 67–0042	Sealing Washer	Joint d'étanchéité	Dichtung	Arandela de reten	
C15 Competition ...	4 **04** 67–8313	Bolt	Boulon	Schraube	Tornillo	2
C15 Competition ...	4 **10** 89–4310	Nut	Ecrou	Mutter	Tuerca	2
C15 Competition ...	4 **01** 89–4311	Circlip	Circlip	Sprengring	Freno	2

*Fitted on and after Frame No. 2325.

*Montée depuis cadre numéro 2325.

*Nach Rahmennummer 2325 Montiert.

*Montada después de cuadro numero 2325.

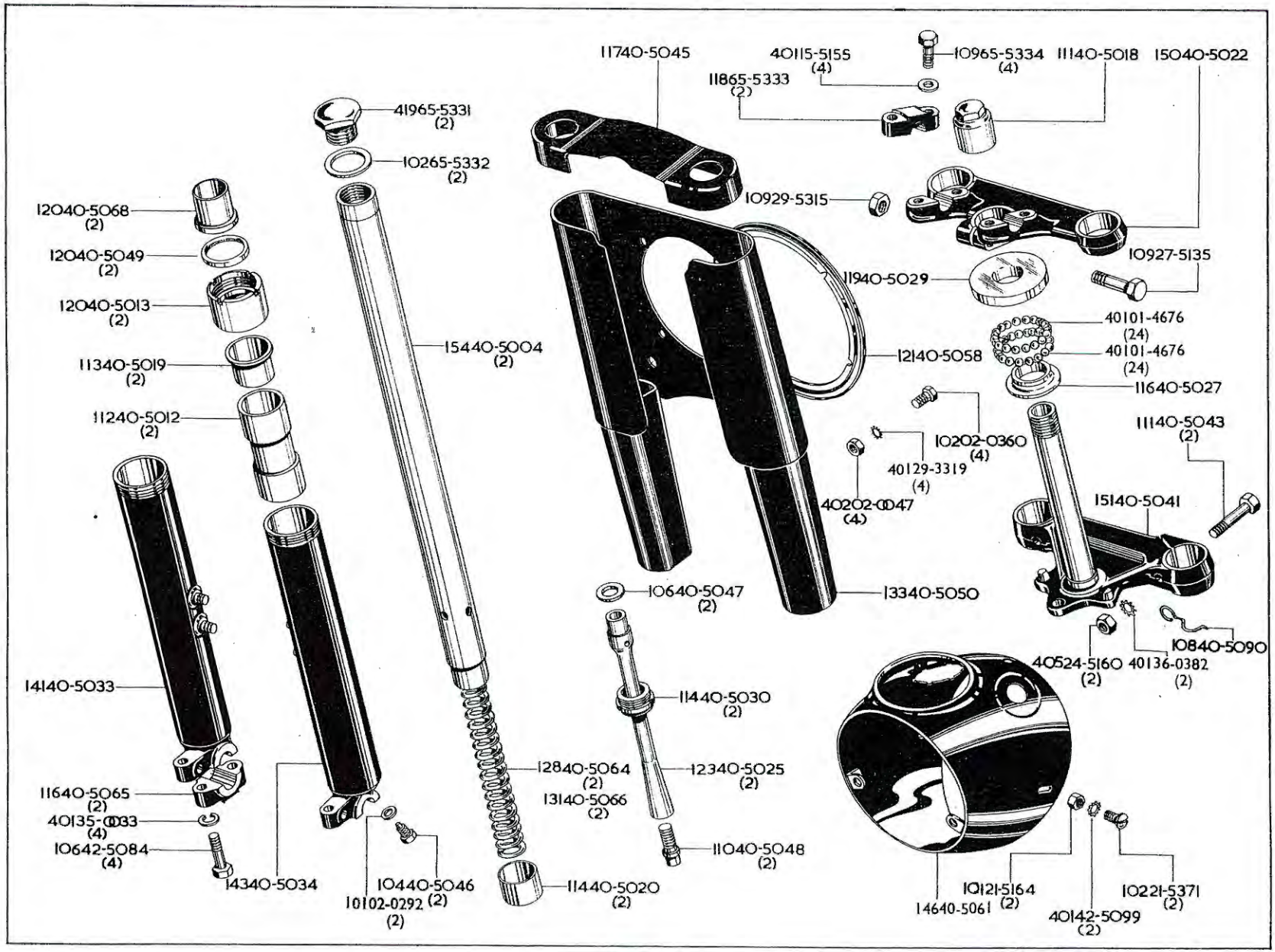

FRONT FORK
FOURCHE AV

FRONT FORK
FOURCHE AV
VORDERGABEL
HORQUILLA DEL.

Model Modèle Typen Modelos	Spares No. No. de pièce Ersatzteil-nr No. de repuesto	Description	Designation	Beschreibung	Descripción	Per Set Par jeu Pr. Satz Juego de
C15 Standard ...	4 01 01-4676	Ball	Bille	Kugel	Bola	48
C15 Standard ...	4 02 02-0047	Nut	Ecrou	Mutter	Tuerca	4
C15 Standard ...	1 01 02-0292	Washer	Rondelle	Scheibe	Arandela	2
C15 Standard ...	1 02 02-0360	Bolt	Boulon	Schraube	Tornillo	4
C15 Standard ...	4 01 15-5155	Washer	Rondelle	Scheibe	Arandela	4
C15 Standard ...	1 01 21-5164	Nut	Ecrou	Mutter	Tuerca	2
C15 Standard ...	1 02 21-5371	Screw	Vis	Schraube	Tornillo	2
C15 Standard ...	4 05 24-5160	Nut	Ecrou	Mutter	Tuerca	2
C15 Standard ...	1 09 27-5135	Bolt	Boulon	Schraube	Tornillo	
C15 Standard ...	4 01 29-3319	Lockwasher	Rondelle frein	Sicherungsscheibe	Freno	4
C15 Standard ...	1 09 29-5315	Nut	Ecrou	Mutter	Tuerca	
C15 Standard ...	4 01 35-0033	Lockwasher	Rondelle frein	Sicherungsscheibe	Freno	4
C15 Standard ...	4 01 36-0382	Lockwasher	Rondelle frein	Sicherungsscheibe	Freno	2
C15 Standard ...	1 54 40-5004	Shaft	Arbre	Welle	Arból	2
C15 Standard ...	1 12 40-5012	Spacer Tube	Tube entretoise	Distanzrohr	Tubo espaciador	2
C15 Standard ...	1 20 40-5013	Screwed Collar	Bague filetée	Halsmutter	Tuerca de collar	2
C15 Standard ...	1 11 40-5018	Cap	Chapeau	Abdeckkappe	Tapon	
C15 Standard ...	1 13 40-5019	Top Bush	Douille supérieur	Obenbüchse	Casquillo sup.	2
C15 Standard ...	1 14 40-5020	Bottom Bush	Douille inférieur	Buchse Unten	Casquillo inferior	2
C15 Standard ...	1 50 40-5022	Top Yoke	Tête de fourche	Oberjoch	Horqueta superior	
C15 Standard ...	1 23 40-5025	Restrictor Rod	Tige	Stange	Varilla	2
C15 Standard ...	1 16 40-5027	Cone	Cone	Konus	Cona	
C15 Standard ...	1 19 40-5029	Bearing Cup	Cuvette de roulement	Lagerschale	Copa de rolamiento	
C15 Standard ...	1 14 40-5030	Stop Nut	Ecrou d'arrêt	Sperrmutter	Tuerca de tope	2
C15 Standard ...	1 41 40-5033	Sliding Tube (left-hand)	Tube coulissant (gauche)	Gleitrohr (Links)	Tubo deslizando (izq.)	
C15 Standard ...	1 43 40-5034	Sliding Tube (right-hand)	Tube coulissant (droite)	Gleitrohr (Rechts)	Tubo deslizando (der.)	
C15 Standard ...	1 51 40-5041	Bottom Yoke	Attache inférieur	Unterjoch	Horqueta inferior	
C15 Standard ...	1 11 40-5043	Bolt	Boulon	Schraube	Tornillo	2
C15 Standard ...	1 17 40-5045	Cover	Couvercle	Shutzkappe	Tapa	
C15 Standard ...	1 04 40-5046	Drain Plug	Bouchon de vidange d'huile	Ablassschraube	Tapón	2
C15 Standard ...	1 06 40-5047	Washer	Rondelle	Scheibe	Arandela	2
C15 Standard ...	1 10 40-5048	Bolt	Boulon	Schraube	Tornillo	2
C15 Standard ...	1 20 40-5049	Oil Seal	Joint d'huile	Simmerring	Reten de aceite	2
C15 Standard ...	1 33 40-5050	Cover	Couvercle	Schutzkappe	Tapa	
C15 Standard ...	1 21 40-5058	Glass Mounting Ring	Portière de phare	Glashaltering	Anillo de sujetador del cristal	
C15 Standard ...	1 46 40-5061	Headlamp Shell	Corps de phare	Scheinwerfergehäuse	Cuerpo de faro	
C15 Standard ...	1 28 40-5064†	Spring	Ressort	Feder	Resorte	2
C15 Standard ...	1 16 40-5065	Clip	Bride	Klammer	Grapa	2
C15 Standard ...	1 31 40-5066*	Spring	Ressort	Feder	Resorte	2
C15 Standard ...	1 20 40-5068	Cover	Couvercle	Schutzkappe	Tapa	2
C15 Standard ...	1 08 40-5090	Clip	Bride	Klammer	Grapa	
C15 Standard ...	1 06 42-5084	Bolt	Boulon	Schraube	Tornillo	4
C15 Standard ...	4 01 42-5099	Lockwasher	Rondelle frein	Sicherungsscheibe	Freno	2
C15 Standard ...	4 19 65-5331	Top Nut	Ecrou supérieur	Obere Mutter	Tuerca superior	2
C15 Standard ...	1 02 65-5332	Washer	Rondelle	Scheibe	Arandela	2
C15 Standard ...	1 18 65-5333	Clamp	Bride	Lasche	Brida	2
C15 Standard ...	1 09 65-5334	Bolt	Boulon	Schraube	Tornillo	4
		*Sidecar †Solo	*Sidecar †Solo	*Beiwagen †Solo	*Sidecar †Solo	

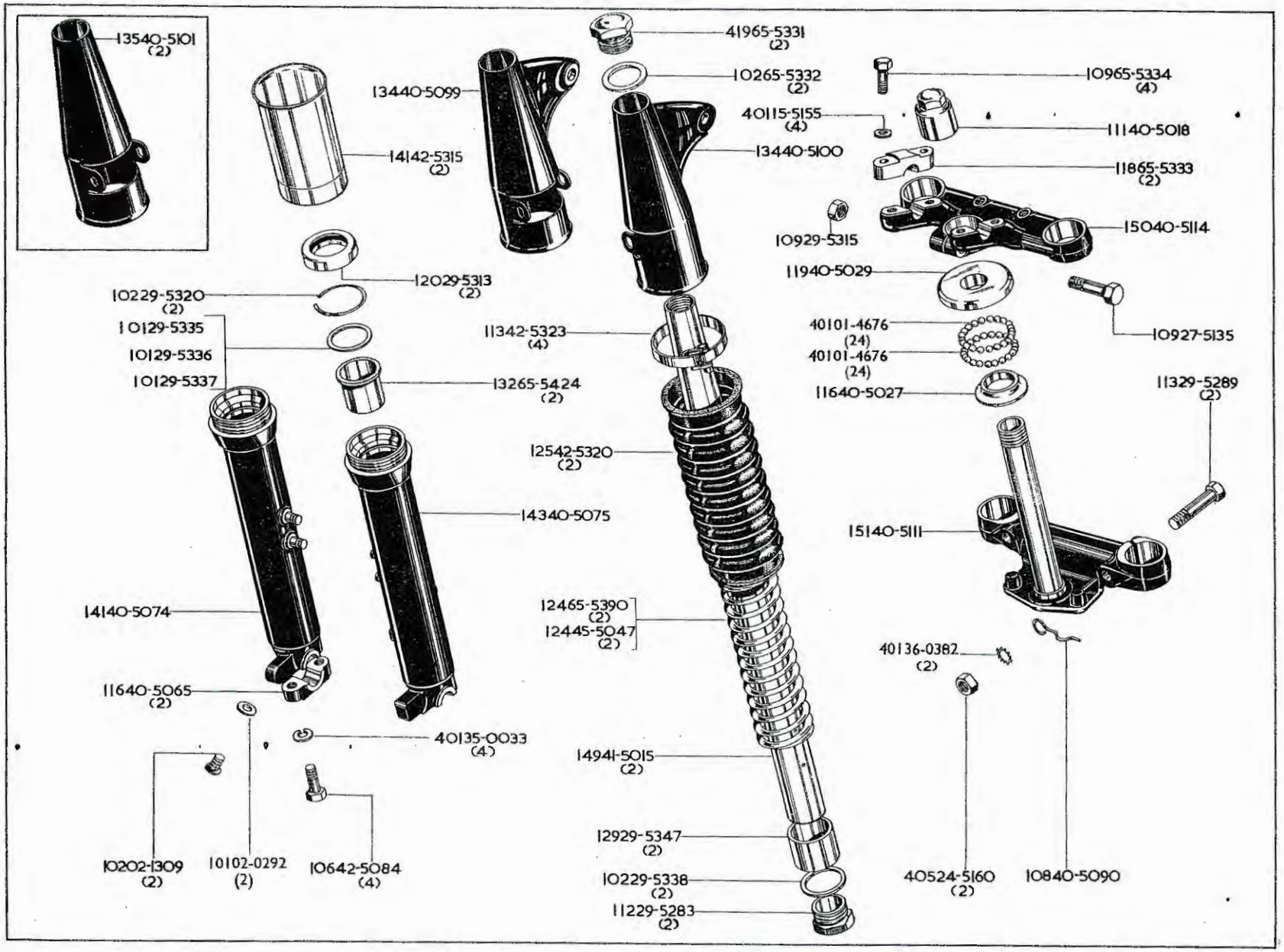
13540-5101 (2)
13440-5099
14142-5315 (2)
41965-5331 (2)
10265-5332 (2)
13440-5100
40115-5155 (4)
10965-5334 (4)
11140-5018
11865-5333 (2)
15040-5114
10929-5315
11940-5029
10927-5135
12029-5313 (2)
10229-5320 (2)
10129-5335
10129-5336
10129-5337
11342-5323 (4)
40101-4676 (24)
40101-4676 (24)
11640-5027
11329-5289 (2)
13265-5424 (2)
12542-5320 (2)
14340-5075
15140-5111
14140-5074
12465-5390 (2)
12445-5047 (2)
40136-0382 (2)
11640-5065 (2)
40135-0033 (4)
14941-5015 (2)
12929-5347 (2)
10229-5338 (2)
11229-5283 (2)
10202-1309 (2)
10102-0292 (2)
10642-5084 (4)
40524-5160 (2)
10840-5090

FRONT FORK
FOURCHE AV
VORDERGABEL
HORQUILLA DEL.

Model Modèle Typen Modelos	Spares No. No. de pièce Ersatzteil-nr No. de repuesto	Description	Designation	Beschreibung	Descripción	Per Set Par jeu Pr. Satz Juego de
C15 Competition ...	8 01 01–4676	Ball	Bille	Kugel	Bola	48
C15 Competition ...	1 01 02–0292	Sealing Washer	Joint d'étanchéité	Dichtung	Arandela de reten	2
C15 Competition ...	1 02 02–1309	Screw	Vis	Schraube	Tornillo	2
C15 Competition ...	4 01 15–5155	Washer	Rondelle	Scheibe	Arandela	4
C15 Competition ...	4 05 24–5160	Nut	Ecrou	Mutter	Tuerca	2
C15 Competition ...	1 09 27–5135	Bolt	Boulon	Schraube	Tornillo	
C15 Competition ...	1 12 29–5283	Plug	Bouchon	Stopfen	Tapón	2
C15 Competition ...	1 13 29–5289	Bolt	Boulon	Schraube	Tornillo	2
C15 Competition ...	1 20 29–5313	Oil Seal	Joint d'huile	Simmerring	Reten de aceite	2
C15 Competition ...	1 09 29–5315	Nut	Ecrou	Mutter	Tuerca	
C15 Competition ...	1 02 29–5320	Circlip	Circlip	Sprengring	Freno	2
C15 Competition ...	1 01 29–5335	Washer (.010 in.)	Rondelle (.254 mm.)	Scheibe (.254 mm.)	Arandela (.254 mm.)	
C15 Competition ...	1 01 29–5336	Washer (.020 in.)	Rondelle (.508 mm.)	Scheibe (.508 mm.)	Arandela (.508 mm.)	
C15 Competition ...	1 01 29–5337	Washer (.030 in.)	Rondelle (.762 mm.)	Scheibe (.762 mm.)	Arandela (.762 mm.)	
C15 Competition ...	1 02 29–5338	Washer	Rondelle	Scheibe	Arandela	2
C15 Competition ...	1 29 29–5347	Bush	Douille	Büchse	Casquillo	2
C15 Competition ...	4 01 35–0033	Lockwasher	Rondelle frein	Sicherungsscheibe	Freno	4
C15 Competition ...	4 01 36–0382	Lockwasher	Rondelle frein	Sicherungsscheibe	Freno	2
C15 Competition ...	1 11 40–5018	Cap	Chapeau	Abdeckkappe	Tapon	
C15 Competition ...	1 16 40–5027	Bottom Cone	Cone inférieure	Unterkonus	Cona inferior	
C15 Competition	1 19 40–5029	Cone	Cone supérieure	Oberkonus	Cona superior	
C15 Competition ...	1 16 40–5065	Cap	Chapeau	Abdeckkappe	Tapon	2
C15 Competition ...	1 41 40–5074	Sliding Tube (n/s)	Tube coulissant (gauche)	Gleitrohr (Links)	Tubo deslizando (izq.)	
C15 Competition ...	1 43 40–5075	Sliding Tube (o/s)	Tube coulissant (droite)	Gleitrohr (Rechts)	Tubo deslizando (der.)	
C15 Competition ...	1 08 40–5090	Clip	Bride	Klammer	Grapa	
C15 Trials	1 34 40–5099*	Sleeve (n/s)	Douille (gauche)	Büchse (Links)	Casquillo (izq.)	
Starfire Scrambler Starfire Roadster	1 34 40–5099*	Sleeve (n/s) (American type).	Douille (gauche) (type American).	Büchse (Links) (Amerikanischen Typs).	Casquillo (izq.) (tipo Americano).	
Starfire Scrambler Starfire Roadster	1 34 40–5100*	Sleeve (o/s) (American type).	Douille (droite) (type American).	Büchse (Rechts) (Amerikanischen Typs).	Casquillo (der.) (tipo Americano).	
C15 Trials	1 34 40–5100*	Sleeve (o/s)	Douille (droite)	Büchse (Rechts)	Casquillo (der.)	
C15 Scrambles, Trials	1 35 40–5101	Sleeve	Douille	Büchse	Casquillo	2
C15 Competition ...	1 51 40–5111	Bottom Yoke	Attache inférieure te de fourche	Unterjoch	Horqueta inferior	2
C15 Competition ...	1 50 40–5114	Top Yoke	Tête de fourche	Oberjoch	Horqueta superior	2
C15 Competition ...	1 49 41–5015	Shaft	Arbre	Welle	Arból	4
C15 Competition ...	1 06 42–5084	Bolt	Boulon	Schraube	Tornillo	2
C15 Competition ...	1 41 42–5315	Oil Seal Housing	Boitier de joint d'huile	Dichtring Gehäuse	Caja reten de aceite	2
C15 Competition ...	1 25 42–5320	Rubber Sleeve.	Douille caoutchouc	Gummimuffe	Manguita de goma	2
C15 Competition ...	1 13 42–5323	Clip	Bride	Klammer	Grapa	2
C15 Scrambles ...	1 24 45–5047	Spring	Ressort	Feder	Resorte	2
C15 Competition ...	4 19 65–5331	Nut	Ecrou	Mutter	Tuerca	2
C15 Competition ...	1 02 65–5332	Washer	Rondelle	Scheibe	Arandela	2
C15 Competition ...	1 18 65–5333	Clip	Bride	Klammer	Grapa	2
C15 Competition ...	1 09 65–5334	Bolt	Boulon	Schraube	Tornillo	4
C15 Trials	1 24 65–5390	Spring	Ressort	Feder	Resorte	
C15 Competition ...	1 32 65–5424	Bush	Douille	Büchse	Casquillo	
		*For Headlamp fitting.	*Pour montage du phare.	*Zur Anbringung des Scheinwerfer.	*Para montaje en el far.	

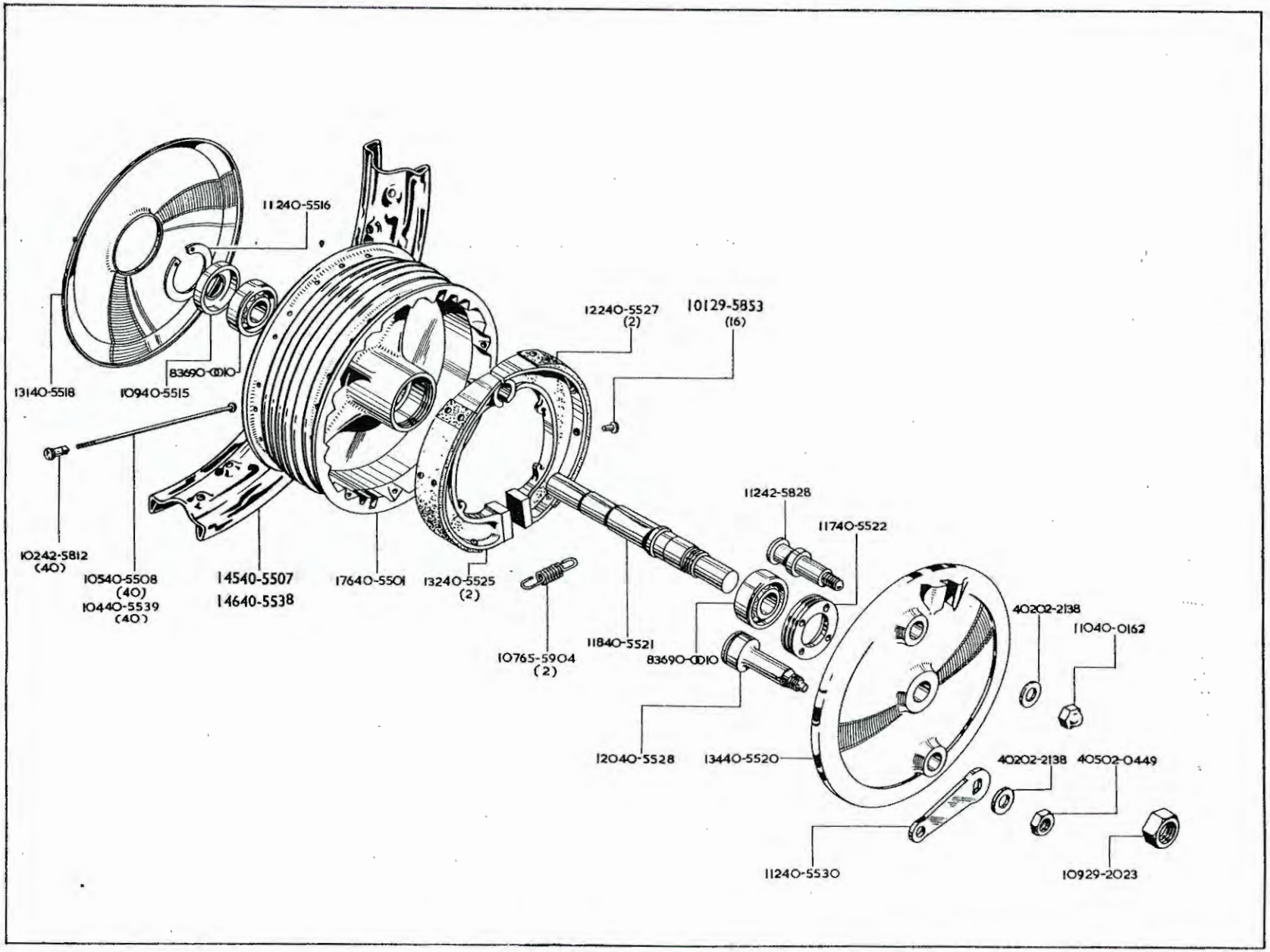
11240-5516
13140-5518
10940-5515
83690-0010
12240-5527
(2)
10129-5853
(16)
10242-5812
(40)
10540-5508
(40)
10440-5539
(40)
14540-5507
14640-5538
17640-5501
13240-5525
(2)
10765-5904
(2)
11840-5521
83690-0010
11242-5828
11740-5522
40202-2138
11040-0162
12040-5528
13440-5520
40202-2138
40502-0449
11240-5530
10929-2023

FRONT WHEEL
ROUE AV
VORDERRAD
RUEDA DELANTERA

Model Modèle Typen Modelos	Spares No. No. de pièce Ersatzteil-nr. No. de repuesto	Description	Designation	Beschreibung	Descripción	Per Set Par jeu Pr. Satz Juego de
C Group	4 05 02–0449	Nut	Ecrou	Mutter	Tuerca	
C Group	4 02 02–2138	Washer	Rondelle	Scheibe	Arandela	2
C Group	1 09 29–2023	Nut	Ecrou	Mutter	Tuerca	
C Group	1 01 29–5853	Rivet	Rivet	Niete	Remache	16
C Group	1 10 40–0162	Nut	Ecrou	Mutter	Tuerca	
C15 Standard ...	1 45 40–5507	Rim	Jante	Felge	Llanta	
C15 Standard ...	1 05 40–5508	Spoke	Rayon	Speiche	Raio	40
C Group	1 09 40–5515	Cover	Couvercle	Schutzkappe	Tapa	
C Group	1 12 40–5516	Circlip	Circlip	Sprengring	Freno	
C Group	1 31 40–5518	Cover	Couvercle	Schutzkappe	Tapa	
C Group	1 34 40–5520	Brake Back Plate	Flasque arrière de frein	Hintere Bremsplatte	Disco de freno	
C Group	1 18 40–5521	Spindle	Arbre	Welle	Arbol	
C Group	1 17 40–5522	Lock Ring	Arrêtoir	Sicherung	Freno	
C Group	1 32 40–5525	Brake Shoe complete	Segment complet	Bremsbacke Kompl.	Zapata completa	2
C Group	1 22 40–5527	Brake Liuing	Garniture de frein	Bremsbelag	Guarnición	2
C Group	1 20 40–5528	Brake Cam	Came de frein	Bremsnocke	Llave de freno	
C Group	1 12 40–5530	Brake Cam Lever	Levier de came de frein	Bremsnockenhebel	Palanca de freno	
C15 Competition ...	1 46 40–5538	Rim	Jante	Felge	Llanta	
C15 Competition ...	1 04 40–5539	Spoke	Rayon	Speiche	Raio	40
C Group	1 02 42–5812	Nipple	Ecrou de rayon	Nippel	Tuerca	40
C Group	1 12 42–5828	Pivot Pin	Axe	Bolzen	Eje	
C Group	1 07 65–5904	Spring	Ressort	Feder	Resorte	2
C Group	8 36 90–0010	Bearing	Roulement	Lager	Rolamiento	2

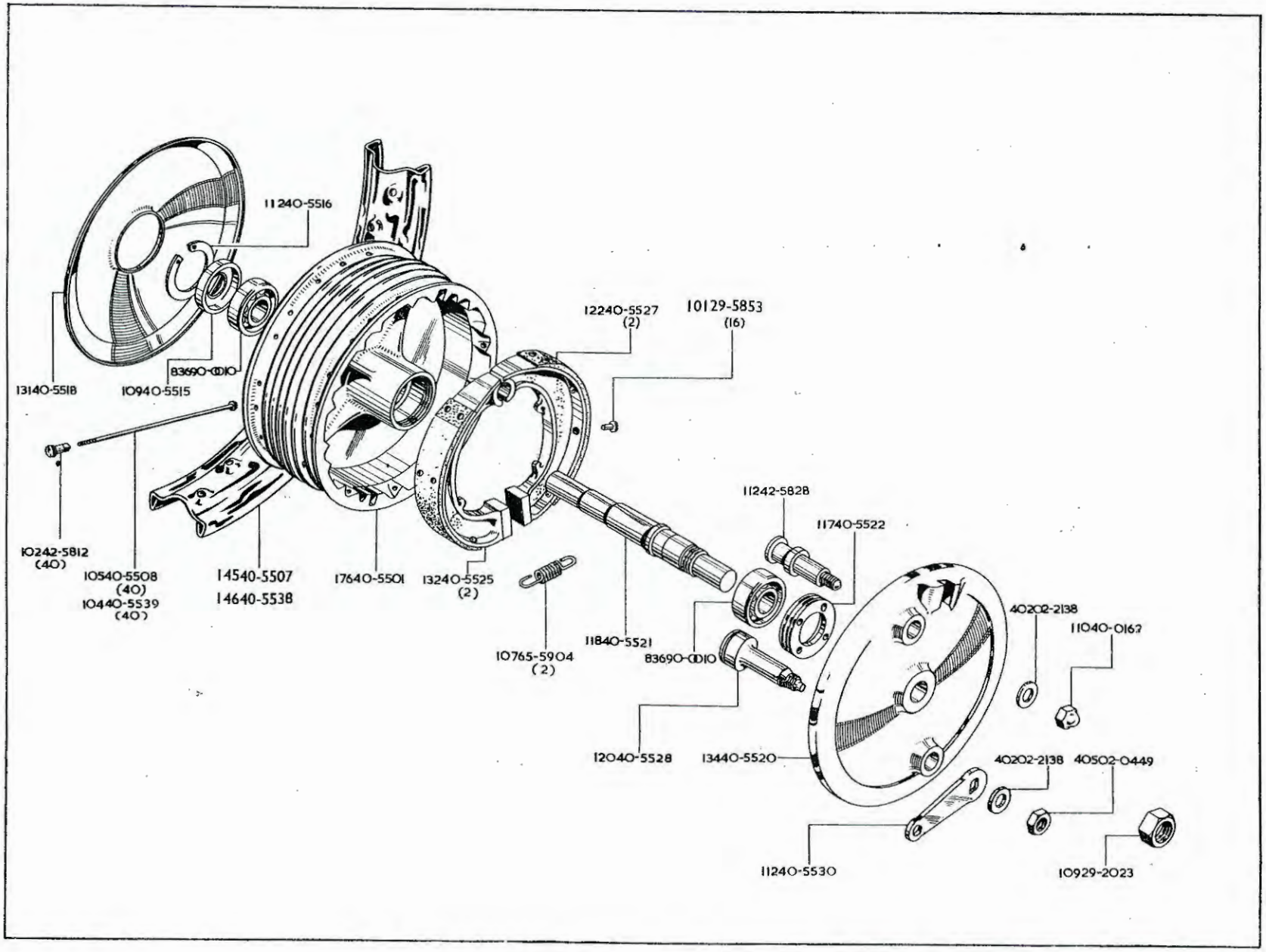

REAR WHEEL
ROUE AR

REAR WHEEL
ROUE AR
HINTERRAD
RUEDA TRASERA

Model Modèle Typen Modelos	Spares No. No. de pièce Ersatzteil -nr No. de repuesto	Description	Designation	Beschreibung	Descripción	Per Set Par jeu Pr. Satz Juego de
C Group	4 02 02–0049	Nut	Ecrou	Mutter	Tuerca	2
C Group	4 05 02–0440	Nut	Ecrou	Mutter	Tuerca	
C Group	4 05 02–0449	Nut	Ecrou	Mutter	Tuerca	3
C Group	4 01 02–0522	Lockwasher	Rondelle frein	Sicherungsscheibe	Freno	2
C15 Competition * ...	4 01 02–0923	Washer	Rondelle	Scheibe	Arandela	2
C Group	1 01 02–1967	Washer	Rondelle	Scheibe	Arandela	
C Group	4 02 02–2138	Washer	Rondelle	Scheibe	Arandela	
C Group	1 07 24–7047	Felt Washer	Rondelle feutre	Filzscheibe	Arandela de fieltro	
C15 Standard ...	8 52 27–8752	Chain	Chaîne	Kette	Cadena	
C Group	1 07 29–5710	Cover	Couvercle	Schutzkappe	Tapa	
C Group	1 02 29–5715	Washer	Rondelle	Scheibe	Arandela	
C Group	1 01 29–5853	Rivet	Rivet	Niete	Remache	16
C Group	1 09 29–6238	Nut	Ecrou	Mutter	Tuerca	2
C15 Competition ...	1 03 40–3226	Nut	Ecrou	Mutter	Tuerca	8
C15 Standard ...	1 07 40–4212	Bolt	Boulon	Schraube	Tornillo	
C15 Standard ...	1 45 40–5507	Rim	Jante	Felge	Lanta	
C15 Standard ...	1 05 40–5508	Spoke	Rayon	Speiche	Raio	40
C Group	1 31 40–5518	Cover	Couvercle	Schutzkappe	Tapa	
C Group	1 32 40–5525	Brake Shoe complete	Segment comp et	Bremsbacke Kompl.	Zapata completa	2
C Group	1 22 40–5527	Brake Lining	Garniture de frein	Bremsbelag	Guarnición	2
C15 Standard ...	1 80 40–6000	Rear Wheel complete	Roue ar complet	Hinterrad Kompl.	Rueda trasera completa	
C15 Standard ...	1 58 40–6014*	Brake Drum	Tambour de frein	Bremstrommel	Tambor del freno	
C15 Standard ...	1 54 40–6018	Brake Drum (45T)	Tambour de frein (D — 45)	Bremstrommel (Z — 45)	Tambor del freno (D — 45)	
C Group	1 09 40–6019	Spacer Bush	Bague entretoise	Distanzbüchse	Anillo espaciador	
C15 Standard ...	1 24 40–6020	Spindle	Arbre	Welle	Arbol	
C Group	1 10 40–6021	Nut	Ecrou	Mutter	Tuerca	2
C Group	1 07 40–6022	Bolt	Boulon	Schraube	Tornillo	6
C Group	1 01 40–6023	Locking Plate	Plaque de blocage	Sicherungsscheibe	Placa cerradora	3

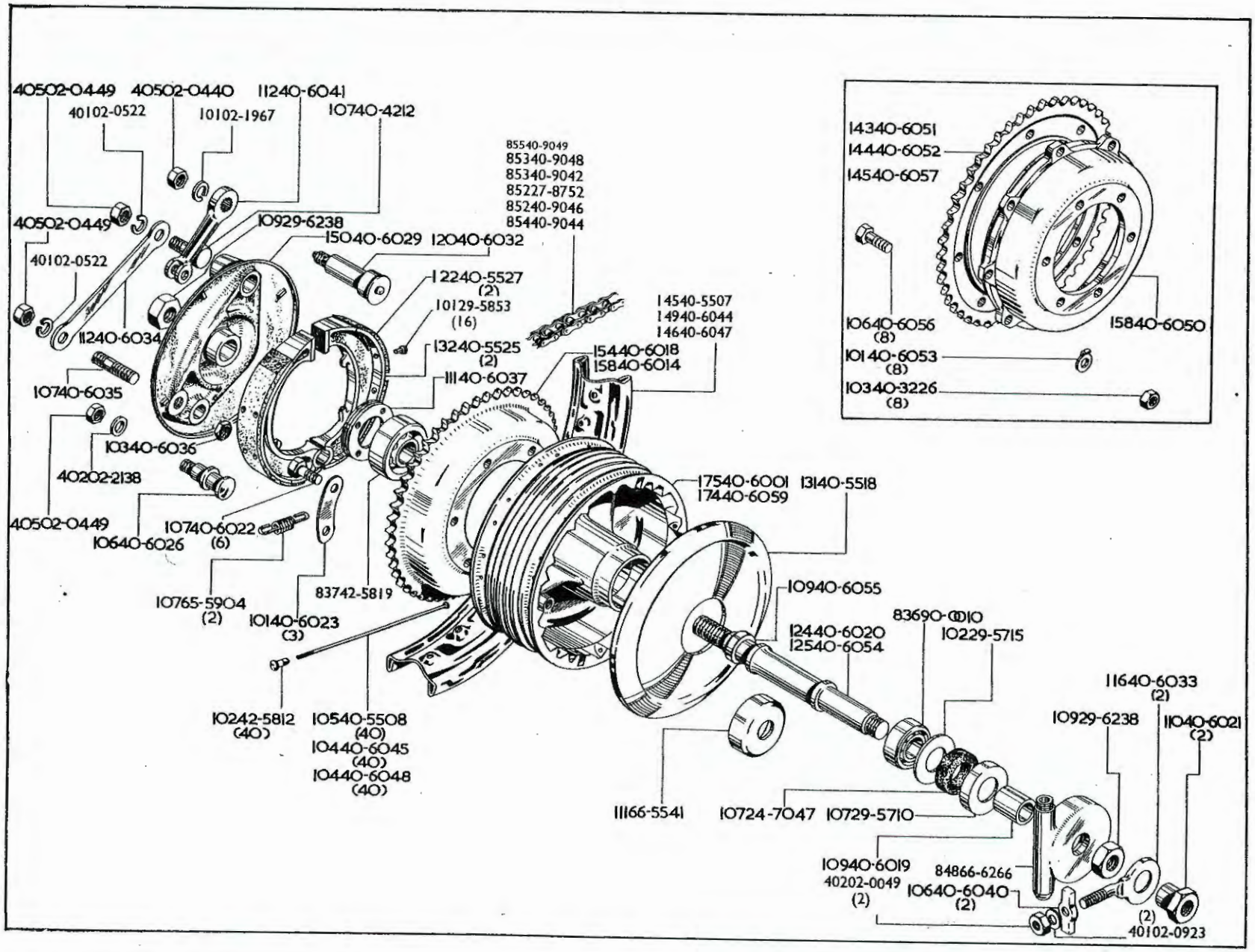

REAR WHEEL
ROLLAR

REAR WHEEL
ROUE AR
HINTERRAD
RUEDA TRASERA

Model Modèle Typen Modelos	Spares No. No. de pièce Ersatzteil-nr No. de repuesto	Description	Designation	Beschreibung	Descripción	Per Set Par jeu Pr. Satz Juego de	
C Group	1 16 40-6026	Fulcrum Pin	Goupille de butée	Drehbolzen	Espiga		
C Group	1 50 40-6029	Brake Back Plate	Flasque arrière de frein	Hintere Bremsplatte	Disco de freno		
C Group	1 20 40-6032	Brake Cam	Came de frein	Bremsnocke	Llave de freno		
C Group	1 16 40-6033	Adjuster	Système de réglage	Einstellschraube	Tornillo de ajuste	2	
C Group	1 12 40-6034	Anchor Strap	Bride d'ancrage	Ankerhalterung	Anclaje de freno		
C Group	1 07 40-6035	Stud	Goujon	Stehbolzen	Esparago		
C Group	1 03 40-6036	Nut	Ecrou	Mutter	Tuerca		
C Group	1 11 40-6037	Lock Ring	Arrêtoir	Sicherung	Freno		
C Group	1 06 40-6040	Adjuster Cap	Couvercle de réglage	Kappe	Tapón	2	
C Group	1 12 40-6041	Brake Cam Lever	Levier de came de frein	Bremsnockenhebel	Palanca de freno		18
C15 Trials	1 49 40-6044	Rim	Jante	Felge	Llanta		
C15 Trials	1 04 40-6045	Spoke	Rayon	Speiche	Raio	40	
C15 Scrambles ...	1 46 40-6047	Rim	Jante	Felge	Llanta		
C15 Scrambles ...	1 04 40-6048	Spoke	Rayon	Speiche	Raio	40	19
C15 Competition ...	1 58 40-6050	Brake Drum	Tambour de frein	Bremstrommel	Tambor del freno		
C15 Competition ...	1 43 40-6051	Chainwheel (52T)	Pignon de chaîne (D — 52)	Kettenrad (Z — 52)	Piñón de cadena (D — 52)		
C15 Competition ...	1 44 40-6052	Chainwheel (56T)	Pignon de chaîne (D — 56)	Kennrad (Z — 56)	Piñón de cadena (D — 56)		20
C15 Competition ...	1 01 40-6053	Lockwasher	Rondelle frein	Sicherungsscheibe	Freno	8	
C15 Competition ...	1 25 40-6054	Spindle	Arbre	Welle	Arbol		
C15 Competition ...	1 09 40-6055	Spacer Bush (n/s)	Bague entretoise (gauche)	Distanzbüchse) (Links)	Anillo espaciador (izq.)		
C15 Competition ...	1 06 40-6056	Bolt	Boulon	Schraube	Tornillo	8	2
C15 Competition ...	1 45 40-6057	Chainwheel (60T)	Pignon de chaîne (D — 60)	Kettenrad (Z — 60)	Piñón de cadena (D — 60)		
C15 Competition ...	8 53 40-9042	Chain (56T sprocket)	Chaîne (pignon D — 56)	Kette (Kettenrad Z — 56)	Cadena (piñón D — 56)		
C15 Trials ...	8 54 40-9044	Chain (60T sprocket)	Chaîne (pignon D — 60)	Kette (Kettenrad Z — 60)	Cadena (piñón D — 60)		
C15 Standard ...	8 52 40-9046	Chain (Export)	Chaîne (Export)	Kette (Ausfuhr)	Cadena (Exportación)		22
C15 Scrambles Starfire Scrambler ...	8 53 40-9048	Chain	Chaîne	Kette	Cadena		
Starfire Roadster ...	8 55 40-9049	Chain	Chaîne	Kette	Cadena		
C Group	1 02 42-5812	Nipple	Ecrou de rayon	Nippel	Tuerca	40	23
C Group	8 37 42-5819	Bearing (left-hand)	Roulement (gauche)	Lager (Links)	Rolamiento (izq.)		
C Group	1 07 65-5904	Spring	Ressort	Feder	Resorte	2	
C15 Scrambles ...	1 11 66-5541	Cover	Couvercle	Schutzkappe	Tapa		
C15 Standard, Trials Starfire Roadster Starfire Scrambler	8 48 66-6266	Speedometer Drive	Entraînement du compteur	Tachoantrieb	Accionamiento del velocimetro		24
C Group	8 36 90-0010	Bearing (right-hand)	Roulement (droite)	Lager (Rechts)	Rolamiento (der.)		
		*Sidecar	*Sidecar	*Beiwagen	*Sidecar		25

26

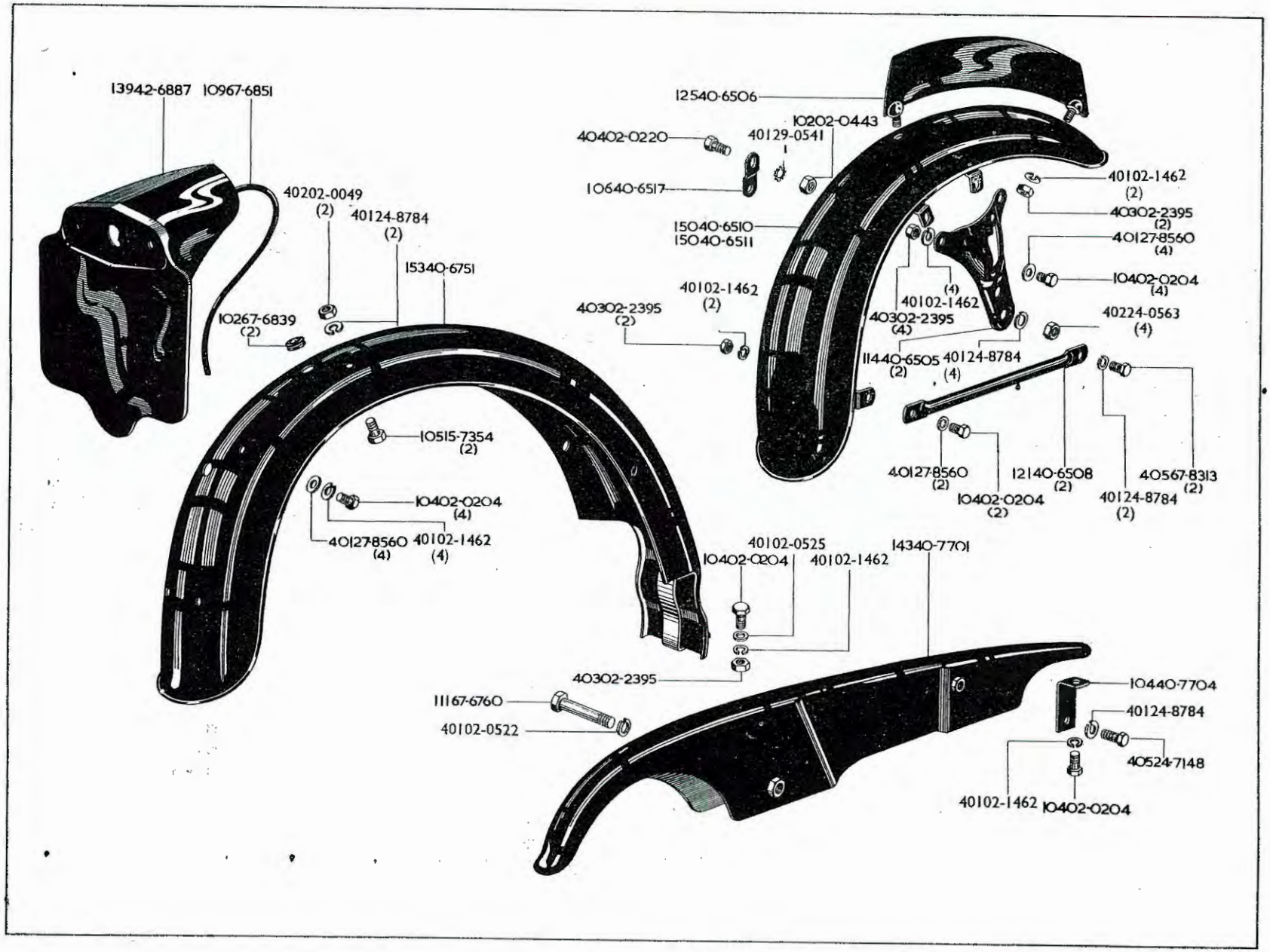
13942-6887
10967-6851
40202-0049
(2)
40124-8784
(2)
15340-6751
10267-6839
(2)
10515-7354
(2)
10402-0204
(4)
40127-8560
(4)
40102-1462
(4)
12540-6506
40402-0220
40129-0541
10202-0443
10640-6517
15040-6510
15040-6511
40102-1462
(2)
40302-2395
(2)
40102-1462
(2)
40302-2395
(2)
(4)
40102-1462
40302-2395
(4)
11440-6505
(2)
40124-8784
(4)
40224-0563
(4)
40127-8560
(2)
10402-0204
(2)
12140-6508
(2)
40124-8784
(2)
40567-8313
(2)
40102-0525
10402-0204
40102-1462
14340-7701
40302-2395
11167-6760
40102-0522
10440-7704
40124-8784
40524-7148
40102-1462
10402-0204

MUDGUARDS
GUARDBOUE
SCHUTZBLECHE
GUARDABARROS

CHAINGUARD
CARTER DE CHAÎNE
KETTENKASTEN
GUARDACADENA

Model Modèle Typen Modelos	Spares No. No. de pièce Ersatzteil-nr No. de repuesto	Description	Designation	Beschreibung		Per Set Par jeu Pr. Satz Juego de
C15 Standard ...	1 **50** 40–6510	Front Guard	Garde-boue de roue av	Vorderradschutzblech	Guardabarro delantera	
C15 Standard ...	1 **53** 40–6751	Rear Guard	Garde-boue de roue ar	Hinterradschutzblech	Guardabarro trasera	
C15 Standard ...	4 **02** 02–0049	Nut	Ecrou	Mutter	Tuerca	2
C15 Standard ...	1 **04** 02–0204	Bolt	Boulon	Schraube	Tornillo	12
C15 Standard ...	4 **04** 02–0220	Bolt	Boulon	Schraube	Tornillo	
C15 Standard ...	1 **02** 02–0443	Nut	Ecrou	Mutter	Tuerca	
C15 Standard ...	4 **01** 02–0522	Lockwasher	Rondelle frein	Sicherungsscheibe	Freno	
C15 Standard ...	4 **01** 02–0525	Washer	Rondelle	Scheibe	Arandela	
C15 Standard ...	4 **01** 02–1462	Lockwasher	Rondelle frein	Sicherungsscheibe	Freno	14
C15 Standard ...	4 **03** 02–2395	Nut	Ecrou	Mutter	Tuerca	8
C15 Standard ...	1 **05** 15–7354	Bolt	Boulon	Schraube	Tornillo	2
C15 Standard ...	4 **02** 24–0563	Nut	Ecrou	Mutter	Tuerca	4
C15 Standard ...	4 **05** 24–7148	Bolt	Boulon	Schraube	Tornillo	
C15 Standard ...	4 **01** 24–8784	Lockwasher	Rondelle frein	Sicherungsscheibe	Freno	9
C15 Standard ...	4 **01** 27–8560	Washer	Rondelle	Scheibe	Arandela	10
C15 Standard ...	4 **01** 29–0541	Lockwasher	Rondelle frein	Sicherungsscheibe	Freno	
C15 Standard ...	1 **14** 40–6505	Bracket	Support	Verstrebung	Soporte	2
C15 Standard ...	1 **25** 40–6506	Number Plate	Plaque de police	Nummernschild	Chapa de patente	
C15 Standard ...	1 **21** 40–6508	Stay	Tringle	Strebe	Tirante	2
C15 Standard ...	1 **50** 40–6511	Front Guard (American type).	Garde-boue de roue av (type American).	Vorderradschutzblech (Amerikanischen Typs).	Guardabarro delantera (tipo Americano).	
C15 Standard ...	1 **06** 40–6517	Bracket	Support	Verstrebung	Soporte	
C15 Standard ...	1 **43** 40–7701	Chain Guard	Carter de chaîne	Kettenschutz	Guardacadena	
C15 Standard ...	1 **04** 40–7704	Bracket	Support	Verstrebung	Soporte	
C15 Standard ...	1 **39** 42–6887	Number Plate	Plaque de police	Nummernschild	Chapa de patente	
C15 Standard ...	1 **11** 67–6760	Bolt	Boulon	Schraube	Tornillo	
C15 Standard ...	1 **02** 67–6839	Grommet	Rondelle capuchon	Tülle	Manguera	2
C15 Standard ...	1 **09** 67–6851	Rubber Moulding	Caoutchouc moule	Profilgummi	Profil de goma	
C15 Standard ...	4 **05** 67–8313	Bolt	Boulon	Schraube	Tornillo	2

18

19

20

21

22

23

24

25

26

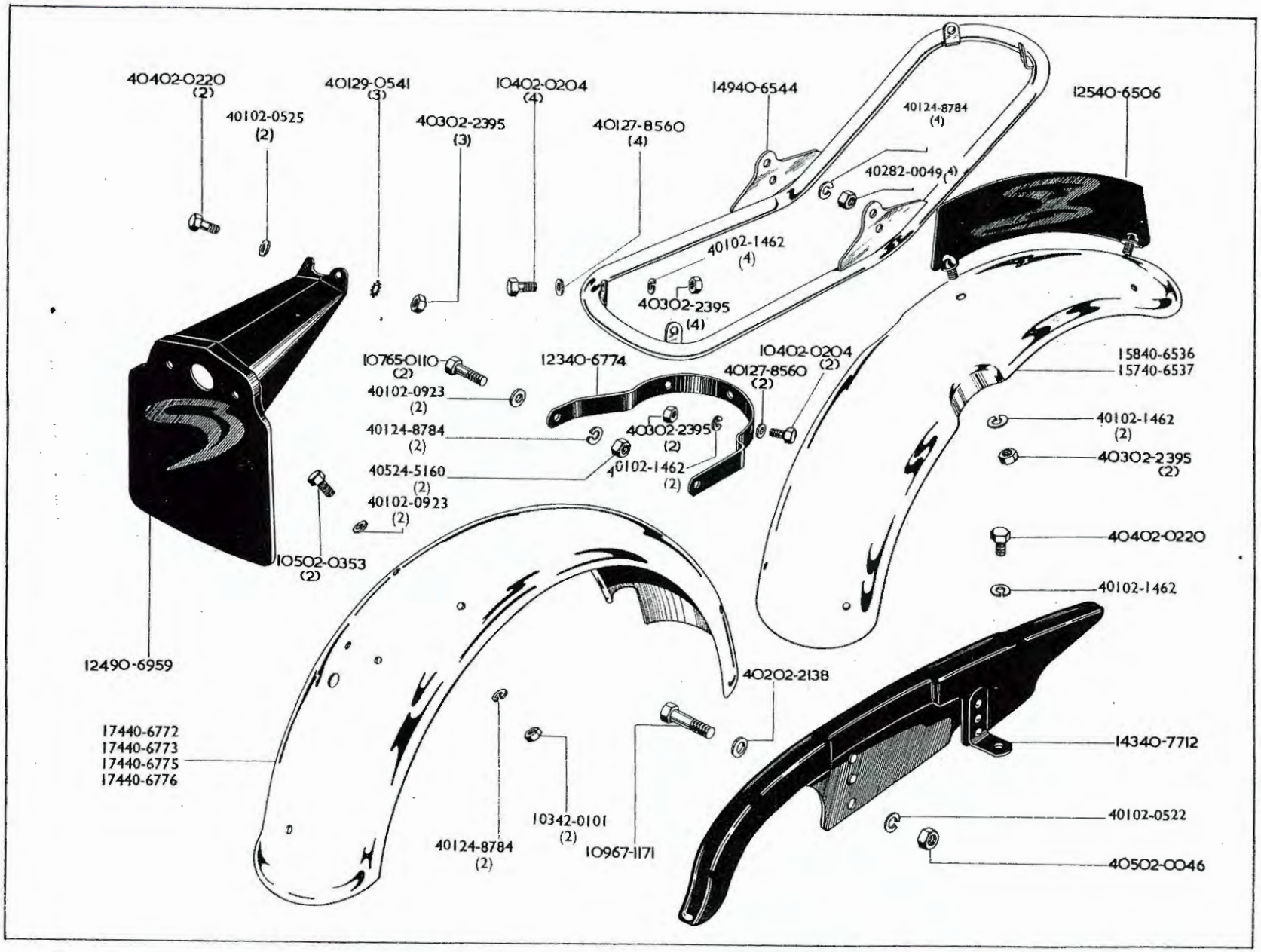
40402-0220 (2)
40102-0525 (2)
40129-0541 (3)
40302-2395 (3)
10402-0204 (4)
40127-8560 (4)
14940-6544
40124-8784 (4)
40282-0049 (4)
12540-6506
40102-1462 (4)
40302-2395 (4)
10765-0110 (2)
40102-0923 (2)
40124-8784 (2)
40524-5160 (2)
40102-0923 (2)
12340-6774
40302-2395 (2)
40102-1462 (2)
40127-8560 (2)
10402-0204 (2)
15840-6536
15740-6537
40102-1462 (2)
40302-2395 (2)
40402-0220
40102-1462
10502-0353 (2)
12490-6959
40202-2138
17440-6772
17440-6773
17440-6775
17440-6776
14340-7712
40124-8784 (2)
10342-0101 (2)
10967-1171
40102-0522
40502-0046

MUDGUARDS
GARDE-BOUE
SCHUTZBLECHE
GUARDABARROS

CHAINGUARD
CARTER DE CHAÎNE
KETTENKASTEN
GUARDACADENA

Model Modèle Typen Modelos	Spares No. No. de pièce Ersatzteil-nr No. de repuesto	Description	Designation	Beschreibung	Descripción	Per Set Par jeu Pr. Satz Juego de
C15 Competition ...	4 05 02–0046	Nut	Ecrou	Mutter	Tuerca	
C15 Competition ...	4 02 02–0049	Nut	Ecrou	Mutter	Tuerca	4
C15 Competition ...	1 04 02–0204	Bolt	Boulon	Schraube	Tornillo	6
C15 Competition ...	4 04 02–0220	Bolt	Boulon	Schraube	Tornillo	3
C15 Competition ...	1 05 02–0353	Bolt	Boulon	Schraube	Tornillo	2
C15 Competition ...	4 01 02–0522	Lockwasher	Rondelle frein	Sicherungsscheibe	Freno	
C15 Competition ...	4 01 02–0525	Washer	Rondelle	Scheibe	Arandela	2
C15 Competition ...	4 01 02–0923	Washer	Rondelle	Scheibe	Arandela	4
C15 Competition ...	4 01 02–1462	Lockwasher	Rondelle frein	Sicherungsscheibe	Freno	9
C15 Competition ...	4 02 02–2138	Washer	Rondelle	Scheibe	Arandela	
C15 Competition ...	4 03 02–2395	Nut	Ecrou	Mutter	Tuerca	11
C15 Competition ...	4 05 24–5160	Nut	Ecrou	Mutter	Tuerca	2
C15 Competition ...	4 01 24–8784	Lockwasher	Rondelle frein	Sicherungsscheibe	Freno	8
C15 Competition ...	4 01 27–8560	Washer	Rondelle	Scheibe	Arandela	6
C15 Competition ...	4 01 29–0541	Lockwasher	Rondelle frein	Sicherungsscheibe	Freno	3
C15 Trials	1 25 40–6506	Number Plate	Plaque de police	Nummernschild	Chapa de patente	
C15 Trials	1 58 40–6536/3	Front Guard	Garde-boue de roue av	Vorderradschutzblech	Guardabarro delantera	
C15 Scrambles ...	1 57 40–6537/3	Front Guard	Garde-boue de roue av	Vorderradschutzblech	Guardabarro delantera	
C15 Competition ...	1 49 40–6544/3	Front Stay	Tringle av	Frontstrebe	Tirante delantera	
C15 Trials	1 74 40–6772/3	Rear Mudguard	Garde-boue de roue ar	Hinterradschutzblech	Guardabarro trasera	
C15 Scrambles ...	1 74 40–6773/3	Rear Mudguard	Garde-boue de roue ar	Hinterradschutzblech	Guardabarro trasera	
C15 Competition ...*	1 23 40–6774	Bracket	Support	Verstrebung	Soporte	
C15 Trials	*1 47 40–6775/3	Rear Mudguard	Garde-boue de roue ar	Hinterradschutzblech	Guardabarro trasera	
C15 Scrambles ...	*1 47 40–6776/3	Rear Mudguard	Garde-boue de roue ar	Hinterradschutzblech	Guardabarro trasera	
C15 Competition ...	1 43 40–7712	Chainguard	Carter de chaîne	Kettenschutz	Guardacadena	
C15 Competition ...	1 03 42–0101	Nut	Ecrou	Mutter	Tuerca	2
C15 Competition ...	1 07 65–0110	Bolt	Boulon	Schraube	Tornillo	2
C15 Competition ...	1 09 67–1171	Bolt	Boulon	Schraube	Tornillo	
C15 Competition ...	1 24 90–6959	Number Plate	Plaque de police	Nummernschild	Chapa de patente	

*Fitted on and after Frame No. 2325.

*Montée depuis cadre numéro 2325.

*Nach Rahmennummer 2325 Montiert.

*Montada después de cuadro numero 2325.

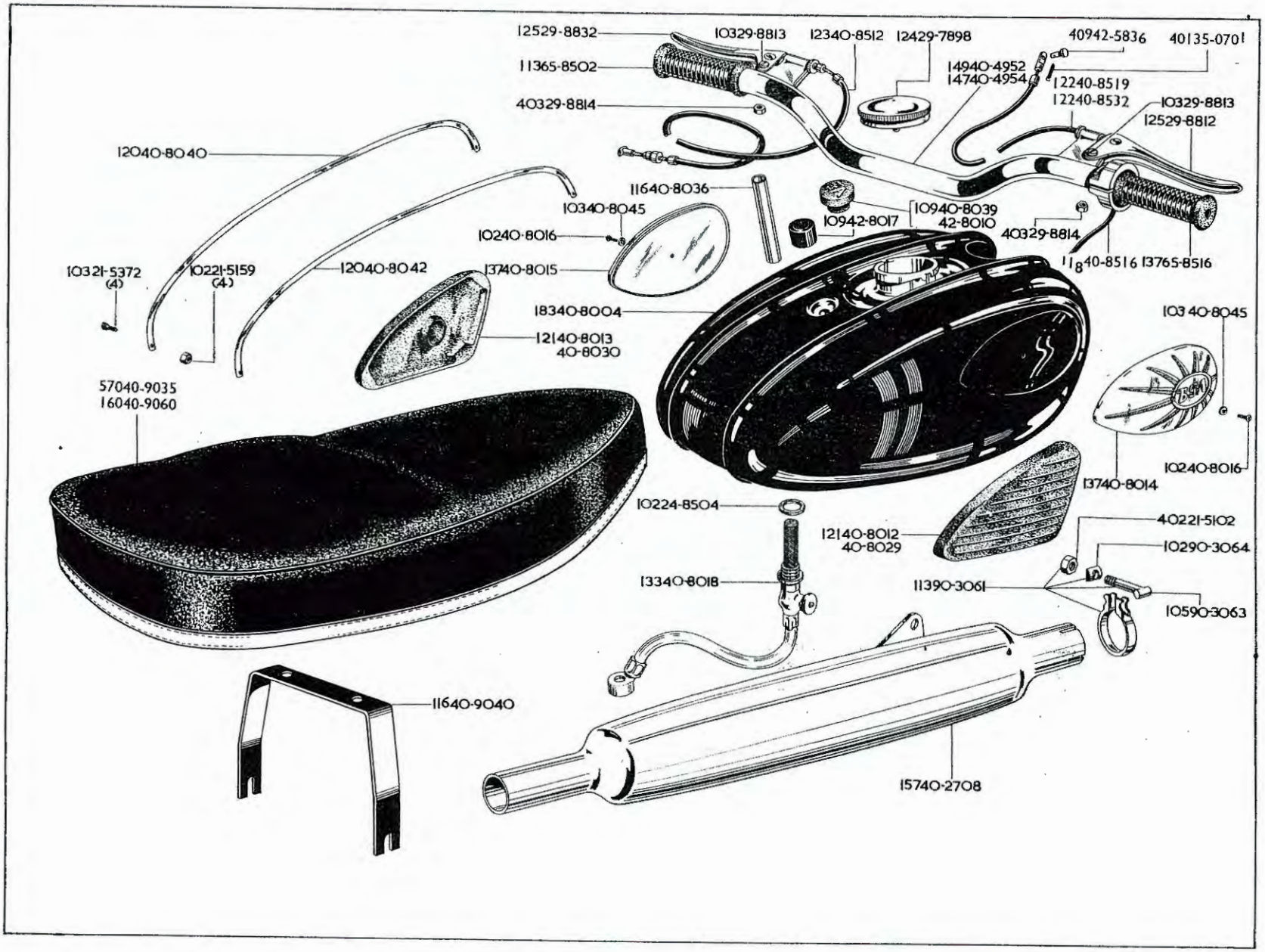

PETROL TANK

HANDLEBAR
GUIDON

SILENCER
SILENCIEUX
SCHALLDÄMPFER

PETROL TANK / RÉSERVOIR D'ESSENCE / BENZINTANK / DEPOSITO DE COMBUSTIBLE — HANDLEBAR / GUIDON / LENKER / MANILLAR — SILENCER / SILENCIEUX / SCHALLDÄMPFER / SILENCIADOR

Model / Modèle / Typen / Modelos	Spares No. / No. de pièce / Ersatzteil-nr / No. de repuesto	Description	Designation	Beschreibung	Descripción	Per Set / Par jeu / Pr. Satz / Juego de
C15 Standard	... 4 02 21–5102	Nut	Ecrou	Mutter	Tuerca	
C15 Standard	... 1 02 21–5159	Nut	Ecrou	Mutter	Tuerca	4
C15 Standard	... 1 03 21–5372	Screw	Vis	Schraube	Tornillo	4
C15 Standard	... 1 02 24–8504	Sealing Washer	Joint d'étanchéité	Dichtung	Arandela de reten	
C15 Standard	... 1 24 29–7898	Filler Cap	Bouchon de remplissage	Verschlusskappe	Tapa	
C15 Standard	... 1 25 29–8812	Brake Lever	Levier de frein	Bremshebel	Palanca de freno	
C15 Standard	... 1 03 29–8813	Screw	Vis	Schraube	Tornillo	2
C15 Standard	... 4 03 29–8814	Nut	Ecrou	Mutter	Tuerca	2
C15 Standard	... 1 25 29–8832	Clutch Lever	Levier d'embrayage	Kupplungshebel	Palanca del embrague	
C15 Standard	... 4 01 35–0701	Split Pin	Goupille fendue	Splint	Chaveta hendida	
C15 Standard	... 1 57 40–2708	Silencer	Silencieux	Schalldämpfer	Silenciador	
C15 Standard	... 1 49 40–4952	Handlebar (Western type)	Guidon (type American)	Lenker (Amerikanischen Typs)	Manillar (tipo Americano)	
C15 Standard	... 1 47 40–4954	Handlebar	Guidon	Lenker	Manillar	
C15 Standard	... 1 83 40–8004	Petrol Tank	Réservoir d'essence	Benzintank	Deposito de combustible	
C15 Standard	... 1 21 40–8012	Rubber Pad (right-hand)	Tampon caoutchouc (droite)	Gummiauflage (Rechts)	Cojin de goma (der.)	
C15 Standard	... 1 21 40–8013	Rubber Pad (left-hand)	Tampon caoutchouc (gauche)	Gummiauflage (Links)	Cojin de goma (izq.)	
C15 Standard	... 1 37 40–8014	Name Plate (right-hand)	Ecusson B.S.A. (droite)	Typenzeichen B.S.A. (Rechts)	Placa B.S.A. (der.)	
C15 Standard	... 1 37 40–8015	Name Plate (left-hand)	Ecusson B.S.A. (gauche)	Typenzeichen B.S.A. (Links)	Placa B.S.A. (izq.)	
C15 Standard	... 1 02 40–8016	Screw	Vis	Schraube	Tornillo	2
C15 Standard	... 1 33 40–8018	Petrol Pipe and Tap	Tuyauterie d'essence et robinet	Benzinleitung und Hahn	Cano de benzina con grifo	
C15 Star	... 1 21 40–8029	Rubber Pad (right-hand) (American type).	Tampon caoutchouc (droite) (type American).	Gummiauflage (Rechts) (Amerikanischen Typs).	Cojin de goma (der.) (tipo Americano).	20
C15 Star	... 1 21 40–8030	Rubber Pad (left-hand) (American type).	Tampon caoutchouc (gauche) (type American).	Gummiauflage (Links) (Amerikanishen Typs).	Cojin de goma (izq.) (tipo Americano).	
C15 Standard	... 1 16 40–8036	Spacer Tube	Tube entretoise	Distanzrohr	Tubo espaciador	
C15 Standard	... 1 09 40–8039	Rubber Plug	Bouchon caoutchouc	Gummistopfen	Tapón de goma	
C15 Standard	... 1 20 40–8040	Beading (left-hand)	Moulure (gauche)	Zierleiste (Links)	Moldura (izq.)	21
C15 Standard	... 1 20 40–8042	Beading (right-hand)	Moulure (droite)	Zierleiste (Rechts)	Moldura (der.)	
C15 Standard	... 1 03 40–8045	Washer	Rondelle	Scheibe	Arandela	2
C15 Standard	... 1 23 40–8512	Clutch Cable	Cable de commande de l'embrayage.	Kupplungskabel	Cable Bowden para embrague	
C15 Standard	... 1 18 40–8516	Throttle Cable	Commande des gaz	Gaszug	Cable Bowden para acelerador	
C15 Standard	... 1 22 40–8519	Front Brake Cable	Cable de commande du frein avant.	Vorderradbremskabel	Cable Bowden para freno delantera.	22
C15 Standard	... 1 22 40–8532*	Front Brake Cable	Cable de commande du frein avant.	Vorderradbremskabel	Cable Bowden para freno delantera.	
C15 Standard	... 5 70 40–9035	Dual Seat (long)	Selle double (longue)	Doppelsitz (Lang)	Asiento doble (largo)	
C15 Standard	... 1 16 40–9040	Bracket	Support	Verstrebung	Soporte	
C15 Standard	... 1 60 40–9060	Dual Seat (short)	Selle double (court)	Doppelsitz (Kurz)	Asiento doble (corto)	23
C15 Standard	... 4 09 42–5836	Pivot Pin	Axe	Bolzen	Eje	
C15 Star	... 1 11 42–8010	Rubber Plug (American type).	Bouchon caoutchouc (type American).	Gummistopfen (Amerikanischen Typs).	Tapon de goma (tipo Americano).	
C15 Standard	... 1 09 42–8017	Rubber Sleeve	Douille caoutchouc	Gummimuffe	Manguita de goma	
C15 Standard	... 1 13 65–8502	Rubber Grip (left-hand)	Poignée en caoutchouc (gauche)	Gummigriff (Links)	Puño fijo de goma (izq.)	
C15 Standard	... 1 37 65–8516	Throttle Twist Grip	Poignée tournante de commande des gaz.	Gasdrehgriff	Puño girante de acelerador	24
C15 Standard	... 1 13 90–3061	Clip complete	Bride complet	Klammer Kompl.	Grapa completa	
C15 Standard	... 1 05 90–3063	Bolt	Boulon	Schraube	Tornillo	
C15 Standard	... 1 02 90–3064	Saddle Washer	Rondelle de selles	Sattelscheibe	Arandela para sillen	
		*For Western Handlebars.	*Pour guidon type American.	*Für Lenker des Amerikanischen Typs.	*Para manillar tipo Americano.	25

26

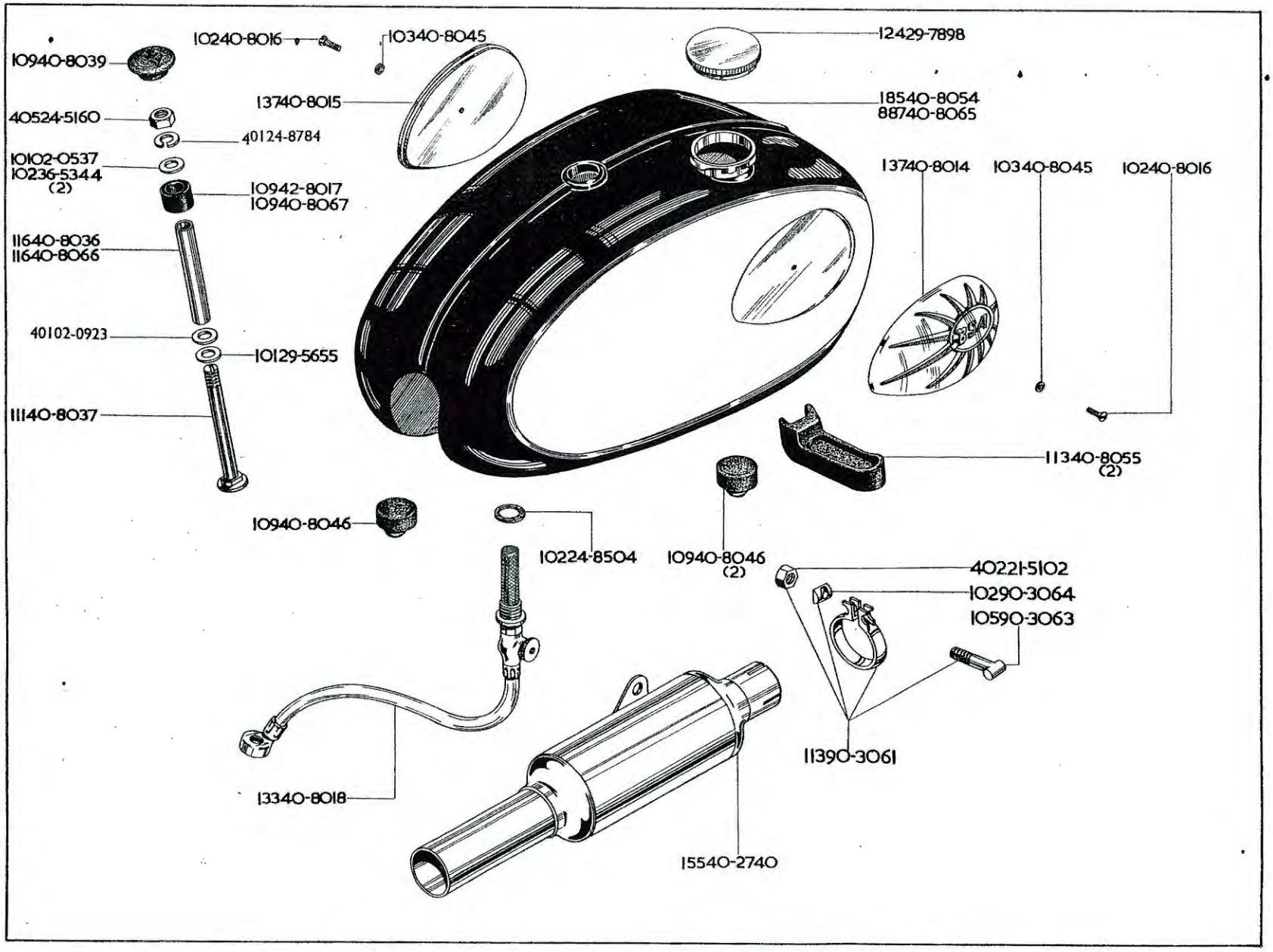
10240-8016
10340-8045
12429-7898
10940-8039
13740-8015
18540-8054
88740-8065
40524-5160
40124-8784
10102-0537
10236-5344
(2)
10942-8017
10940-8067
13740-8014
10340-8045
10240-8016
11640-8036
11640-8066
40102-0923
10129-5655
11140-8037
11340-8055
(2)
10940-8046
10224-8504
10940-8046
(2)
40221-5102
10290-3064
10590-3063
11390-3061
13340-8018
15540-2740

SILENCER

PETROL TANK
RÉSERVOIR D'ESSENCE
BENZINTANK
DEPOSITO DE COMBUSTIBLE

SILENCER
SILENCIEUX
SCHALLDÄMPFER
SILENCIADOR

Model Modèle Typen Modelos	Spares No. No. de pièce Ersatzteil-nr No. de repuesto	Description	Designation	Beschreibung	Descripción	Per Set Par jeu Pr. Satz Juego de	
C15 Competition ...	1 01 02–0537	Washer	Rondelle	Scheibe	Arandela		
C15 Competition ...	4 01 02–0923	Washer (alloy petrol tank).	Rondelle (réservoir d'aluminium).	Scheibe (Leichtmetall-Benzintank).	Arandela (depósito de combustible aleación ligera).		
C15 Trials, ...	4 02 21–5102	Nut	Ecrou	Mutter	Tuerca		
C15 Competition ...	4 05 24–5160	Nut	Ecrou	Mutter	Tuerca		
C15 Competition ...	1 02 24–8504	Sealing Washer	Joint d'étanchéité	Dichtung	Arandela de reten		
C15 Competition ...	4 01 24–8784	Lockwasher	Rondelle frein	Sicherungsscheibe	Freno		
C15 Competition ...	1 01 29–5655	Washer (alloy petrol tank).	Rondelle (réservoir d'aluminium).	Scheibe (Leichtmetall-Benzintank).	Arandela (depósito de combustible aleación ligera).		
C15 Competition ...	1 24 29–7898	Filler Cap	Bouchon de remplissage	Verschlusskappe	Tapa		
C15 Competition ...	1 02 36–5344	Washer (alloy petrol tank).	Rondelle (réservoir d'aluminium).	Scheibe (Leichtmetall-Benzintank).	Arandela (depósito de combustible aleación ligera).	2	
C15 Trials ... ... Starfire Roadster	1 55 40–2740	Silencer	Silencieux	Schalldämpfer	Silenciador		
C15 Competition ...	1 37 40–8014	Name Plate (o/s)	Ecusson (droite)	Typenzeichen (Rechts)	Placa (der.)		
C15 Competition ...	1 37 40–8015	Name Plate (n/s)	Ecusson (gauche)	Typenzeichen (Links)	Placa (izq.)		
C15 Competition ...	1 02 40–8016	Screw	Vis	Schraube	Tornillo	2	
C15 Competition ...	1 33 40–8018	Petrol Pipe and Tap	Tuyauterie essence et robinet	Benzinleitung und Hahn	Caño de benzina con grifo		
C15 Competition ...	1 16 40–8036	Distance Piece	Entretoise	Distanzrohr	Distanciador		
C15 Competition ...	1 11 40–8037	Bolt	Boulon	Schraube	Tornillo		
C15 Competition ...	1 09 40–8039	Grommet	Rondelle capuchon	Tülle	Manguera		
C15 Competition ...	1 03 40–8045	Washer	Rondelle	Scheibe	Arandela	2	
C15 Competition ...	1 09 40–8046	Rubber Buffer (rear)	Butée caoutchouc ar	Hinterer Gummipuffer	Tope de goma trasera	1	
C15 Competition ...	1 09 40–8046	Rubber Buffer (alloy tank)	Butée caoutchouc (réservoir d'aluminium).	Gummipuffer (Leichtmetall-Benzintank).	Tope de goma depósito de combustible (aleación ligera).	3	21
C15 Competition ...	1 85 40–8054	Petrol Tank	Réservoir d'essence	Benzintank	Depósito de combustible		
C15 Competition ...	1 13 40–8055	Rubber Buffer (front)	Butée caoutchouc av	Vorderer Gummipuffer	Tope de goma delantera	2	
C15 Competition ...	8 87 40–8065	Petrol Tank (alloy)	Réservoir d'essence (d'aluminium.)	Leichtmetall-Benzintank	Depósito de combustible aleación ligera.		
C15 Competition ...	1 16 40–8066	Distance Piece (alloy tank).	Entretoise (réservoir d'aluminium).	Distanzrohr (Leichtmetall-Benzintank).	Distanciador (depósito de combustible aleación ligera).		22
C15 Competition ...	1 09 40–8067	Rubber Sleeve	Douille caoutchouc	Gummimuffe	Manguita de goma		
C15 Trials	1 14 42–2860	Clip	Bride	Klammer	Grapa		
C15 Competition ...	1 09 42–8017	Rubber Sleeve	Douille caoutchouc	Gummimuffe	Manguita de goma		
C15 Trials	1 05 90–3063	Bolt	Boulon	Schraube	Tornillo		
C15 Trials	1 02 90–3064	Saddle Washer	Rondelle de selles	Sattelscheibe	Arandela para sillen		23

24

25

26

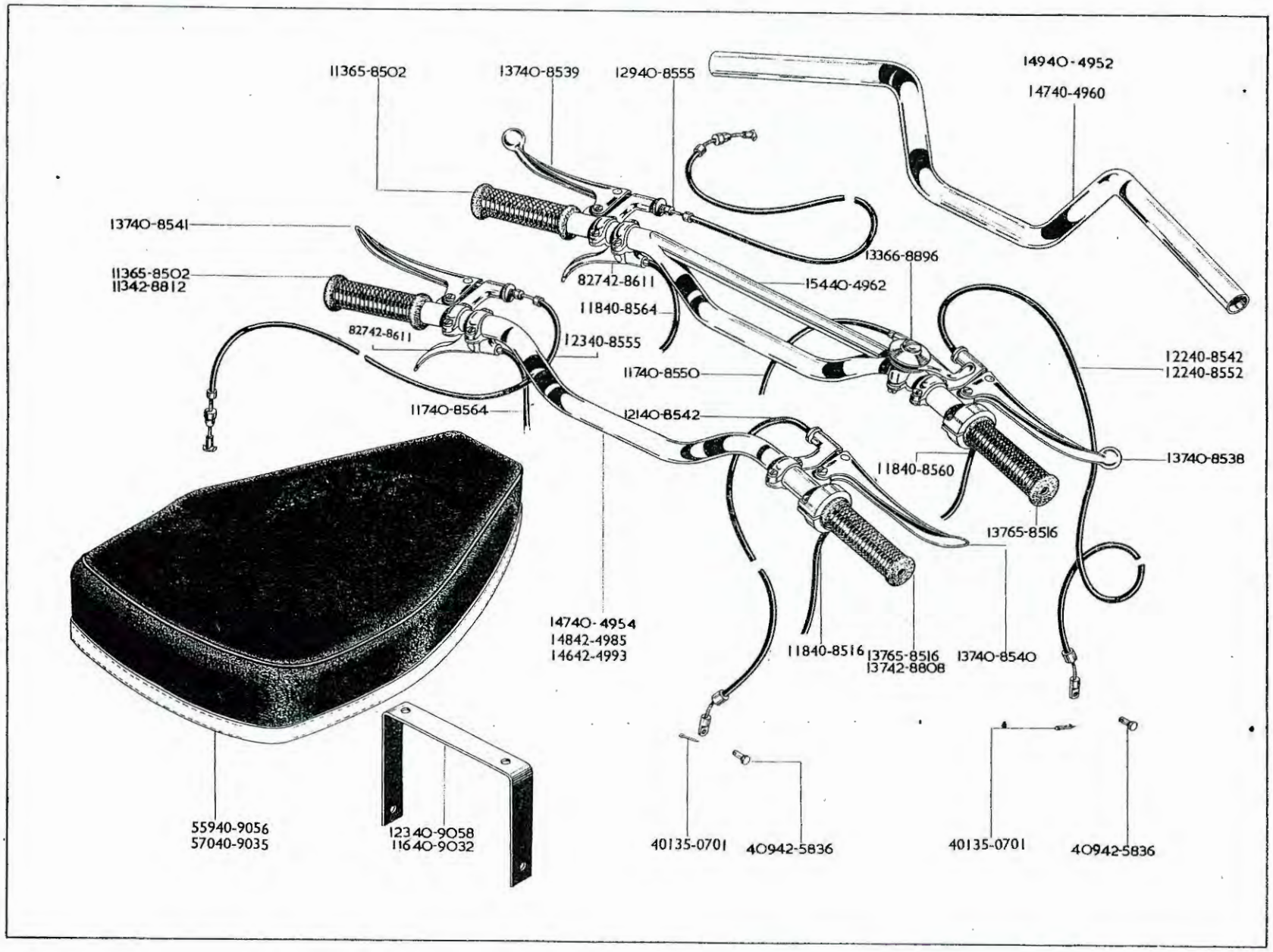
11365-8502
13740-8539
12940-8555
14940-4952
14740-4960
13740-8541
11365-8502
11342-8812
82742-8611
15440-4962
13366-8896
11840-8564
82742-8611
12340-8555
11740-8550
12240-8542
12240-8552
11740-8564
12140-8542
11840-8560
13740-8538
13765-8516
14740-4954
14842-4985
14642-4993
11840-8516
13765-8516
13742-8808
13740-8540
55940-9056
57040-9035
12340-9058
11640-9032
40135-0701
40942-5836
40135-0701
40942-5836

DUAL SEAT

HANDLEBAR
GUIDON
LENKER
MANILLAR

DUAL SEAT
SELLE DOUBLE
DOPPELSITZ
ASIENTO DOBLE

Model Modèle Typen Modelos	Spares No. No. de pièce Erstazteil-nr No. de repuesto	Description	Designation	Beschreibung	Descripción	Per Set Par jeu Pr. Satz Juego de
C15 Competition ...	4 01 35-0701	Split Pin	Goupille fendue	Splint	Chaveta hendida	2
C15 Standard ...	1 49 40-4952	Handlebar (Western type).	Guidon (type American)	Lenker (Amerikanischen Typs)	Manillar (tipo Americano)	
C15 Standard ...	1 47 40-4954	Handlebar	Guidon	Lenker	Manillar	
C15 Competition ...	1 47 40-4960	Handlebar (Western type)	Guidon (type American)	Lenker (Amerikanischen Typs)	Manillar (tipo Americano)	
C15 Scrambles, Road Scrambler ...	1 54 40-4962	Handlebar	Guidon	Lenker	Manillar	
C15 Trials	1 18 40-8516	Throttle Cable	Commande des gaz	Gaszug	Cable Bowden para acelerador	
C15 Trials (1961) ...	1 37 40-8538	Brake Lever	Levier de came de frein	Bremsnockenhebel	Palanca de freno	
C15 Scrambles ...	1 37 40-8538	Brake Lever	Levier de came de frein	Bremsnockenhebel	Palanca de freno	
C15 Trials (1961) ...	1 37 40-8539	Clutch Lever	Levier d'embrayage	Kupplungshebel	Palanca del embrague	
C15 Scrambles ...	1 37 40-8539	Clutch Lever	Levier d'embrayage	Kupplungshebel	Palanca del embrague	
C15 Trials	1 37 40-8540	Brake Lever	Levier de came de frein	Bremsnockenhebel	Palanca de freno	
C15 Trials	1 37 40-8541	Clutch Lever	Levier d'embrayage	Kupplungshebel	Palanca del embrague	
C15 Competition ...	1 22 40-8542	Front Brake Cable	Cable de commande du frein avant.	Vorderradbremskabel	Cable Bowden para freno delantera.	
C15 Scrambles ...	1 17 40-8550	Air Control Cable	Cable pour la manette d'air	Seilzug für Luft	Cable para la manecilla de aire	
C15 Competition ...	1 22 40-8552*	Front Brake Cable	Cable de commande du frein avant.	Vorderradbremskabel	Cable Bowden para freno delantera.	
C15 Competition ...	1 23 40-8555	Clutch Cable	Cable de commande de l'embrayage.	Kupplungskabel	Cable Bowden para embrague	2
C15 Scrambles ...	1 18 40-8560	Throttle Cable	Commande des gaz	Gaszug	Cable Bowden para acelerador	
C15 Competition ...	1 18 40-8564	Exhaust Cable	Cable pour decompresseur	Seilzug für Auspuff-Ventilhebel	Cable para des compresor	2
C15 Competition ...	1 16 40-9032	Bracket (short, dual seat)	Support pour selle double, (court).	Verstrebung für Doppelsitz (Kurz).	Soporte para asiento doble (corto).	
C15 Competition ...	5 70 40-9035	Dual Seat (short)	Selle double (court)	Doppelsitz (Kurz)	Asiento doble (corto)	
C15 Competition ...	5 59 40-9056	Dual Seat	Selle double	Doppelsitz	Asiento doble	
C15 Competition ...	1 23 40-9058	Bracket	Support	Verstrebung	Soporte	
C15 Trials	1 48 42-4985	Handlebar	Guidon	Lenker	Manillar	
Starfire Scrambler	1 46 42-4993	Handlebar	Guidon	Lenker	Manillar	
C15 Competition ...	1 09 42-5836	Pivot Pin	Axe	Drehzapfen	Eje	2
C15 Competition ...	8 27 42-8611	Exhaust Lever	Manette de d'decompresseur	Auspuff-Ventilhebel	Manecilla del compresor	
Starfire Scrambler	1 37 42-8808	Throttle Twist Grip (American type)	Poignée tournante de commande des gaz. (Type American)	Gasdrehgriff (Amerikanischen Typs)	Puño girante de acelerador (Tipo Americano)	
Starfire Roadster (1961)	1 13 42-8812	Rubber Grip (left-hand) (American type)	Poignée en caoutchouc (gauche) (Type American)	Gummigriff (Links) (Amerikanischen Typs)	Puño fijo de goma (izq.) (Tipo Americano)	
C15 Competition ...	1 13 65-8502	Rubber Grip (left-hand)	Poignée en caoutchouc (gauche)	Gummigriff (Links)	Puño fijo de goma (izq.)	
C15 Competition ...	1 37 65-8516	Throttle Twist Grip	Poignée tournante de commande des gaz.	Gasdrehgriff	Puño girante de acelerador	2
C15 Scrambles ...	1 33 66-8896	Air Control Lever	Levier pour la manette d'air	Lufthebel	Palanca para la manecilla de aire	

*For Western Handlebars.

*Pour guidon type American.

*Für Lenker des Amerkianischen Typs.

*Para manillar tipo Americano.

22

23

24

25

26

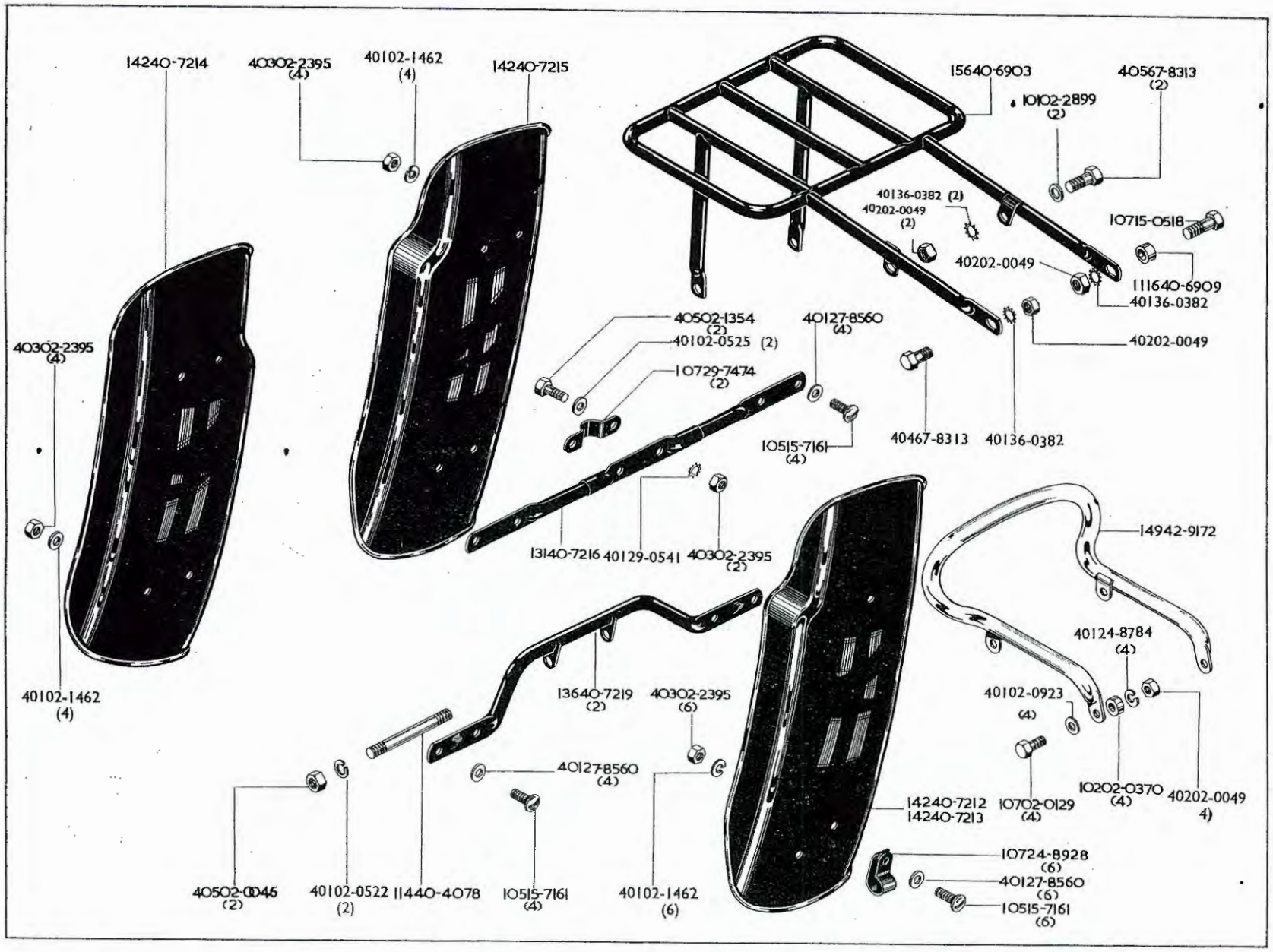
14240-7214
40302-2395 (4)
40102-1462 (4)
14240-7215
15640-6903
40567-8313 (2)
10102-2899 (2)
40136-0382 (2)
40202-0049 (2)
10715-0518
40202-0049
111640-6909
40136-0382
40202-0049
40502-1354 (2)
40102-0525 (2)
40127-8560 (4)
10729-7474 (2)
40302-2395 (4)
10515-7161 (4)
40467-8313
40136-0382
13140-7216
40129-0541
40302-2395 (2)
14942-9172
40124-8784 (4)
40102-1462 (4)
13640-7219 (2)
40302-2395 (6)
40102-0923 (4)
40127-8560 (4)
10202-0370 (4)
40202-0049 4)
14240-7212
14240-7213
10702-0129 (4)
10724-8928 (6)
40127-8560 (6)
10515-7161 (6)
40502-0046 (2)
40102-0522 (2)
11440-4078
10515-7161 (4)
40102-1462 (6)

LEGSHIELDS
PROTÈGE-JAMBES
BEINSCHUTZ
GUARDAPIERNAS

CARRIER
PORTE-BAGAGES
GEPÄCKTRÄGER
PORTA-EQUIPAJE

HANDRAIL
POIGNÉE
HALTERGRING
PUNO

Model Modèle Typen Modelos		Spares No. No. de pièce Ersatzteil-nr No. de repuesto	Description	Designation	Beschreibung	Descripción	Per Set Par jeu Pr. Satz Juego de
C15 Standard	...	4 05 02-0046	Nut	Ecrou	Mutter	Tuerca	2
C15 Standard	...	4 02 02-0049	Nut	Ecrou	Mutter	Tuerca	8
C15 Standard	...	1 07 02-0129	Bolt	Boulon	Schraube	Tornillo	4
C15 Standard	...	1 02 02-0370	Distance Piece	Entretoise	Distanzrohr	Distanciador	4
C15 Standard	...	4 01 02-0522	Lockwasher	Rondelle frein	Sicherungsscheibe	Freno	2
C15 Standard	...	4 01 02-0525	Washer	Rondelle	Scheibe	Arandela	2
C15 Standard	...	4 01 02-0923	Washer	Rondelle	Scheibe	Arandela	4
C15 Standard	...	4 05 02-1354	Bolt	Boulon	Schraube	Tornillo	2
C15 Standard	...	4 01 02-1462	Lockwasher	Rondelle frein	Sicherungsscheibe	Freno	14
C15 Standard	...	4 03 02-2395	Nut	Ecrou	Mutter	Tuerca	16
C15 Standard	...	1 01 02-2899	Washer	Rondelle	Scheibe	Arandela	2
C15 Standard	...	1 07 15-0518	Bolt (n/s)	Boulon (gauche)	Schraube (Links)	Tornillo (izq.)	
C15 Standard	...	1 05 15-7161	Screw	Vis	Schraube	Tornillo	14
C15 Standard	...	4 01 24-8784	Lockwasher	Rondelle frein	Sicherungsscheibe	Freno	4
C15 Standard	...	1 07 24-8928	Clip	Bride	Klammer	Grapa	6
C15 Standard	...	4 01 27-8560	Washer	Rondelle	Scheibe	Arandela	14
C15 Standard	...	4 01 29-0541	Lockwasher	Rondelle frein	Sicherungsscheibe	Freno	2
C15 Standard	...	1 07 29-7474	Clip	Bride	Klammer	Grapa	2
C15 Standard	...	4 01 36-0382	Lockwasher	Rondelle frein	Sicherungsscheibe	Freno	4
C15 Standard	...	1 14 40-4078	Stud	Goujon	Stehbolzen	Esparago	
C15 Standard	...	1 56 40-6903	Carrier	Porte-bagages	Gepäckträger	Porta-equipaje	
C15 Standard	...	1 11 40-6909	Distance Piece (n/s)	Entretoise (gauche)	Distanzrohr (Links)	Distanciador (izq.)	
C15 Standard	...	1 42 40-7212	Legshield (o/s) (for Safety Bars).	Protège-jambes (droite) pour pare-chocs.	Beinschutz (Rechts) für Sturzbugel.	Guardapiernas (der.) para defensas.	
C15 Standard	...	1 42 40-7213	Legshield (n/s) (for Safety Bars).	Protège-jambes (gauche) pour pare-chocs.	Beinschutz (Links) für Sturzbugel.	Guardapiernas (izq.) para defensas.	
C15 Standard	...	1 42 40-7214	Legshield (o/s)	Protège-jambes (droite)	Beinschutz (Rechts)	Guarapiernas (der.)	
C15 Standard	...	1 42 40-7215	Legshield (n/s)	Protège-jambes (gauche)	Beinschutz (Links)	Guarapiernas (izq.)	
C15 Standard	...	1 31 40-7216	Support (top)	Support (supérieure)	Halter (Oben)	Soporte (superior)	2
C15 Standard	...	1 36 40-7219	Support (bottom)	Support (inférieure)	Halter (Unten)	Soporte (inferior)	
C15 Standard	...	1 49 42-9172	Handrail	Poignée	Haltergriff	Puño	
C15 Standard	...	4 04 67-8313	Bolt (o/s)	Boulon (droite)	Schraube (Rechts)	Tornillo (der.)	3

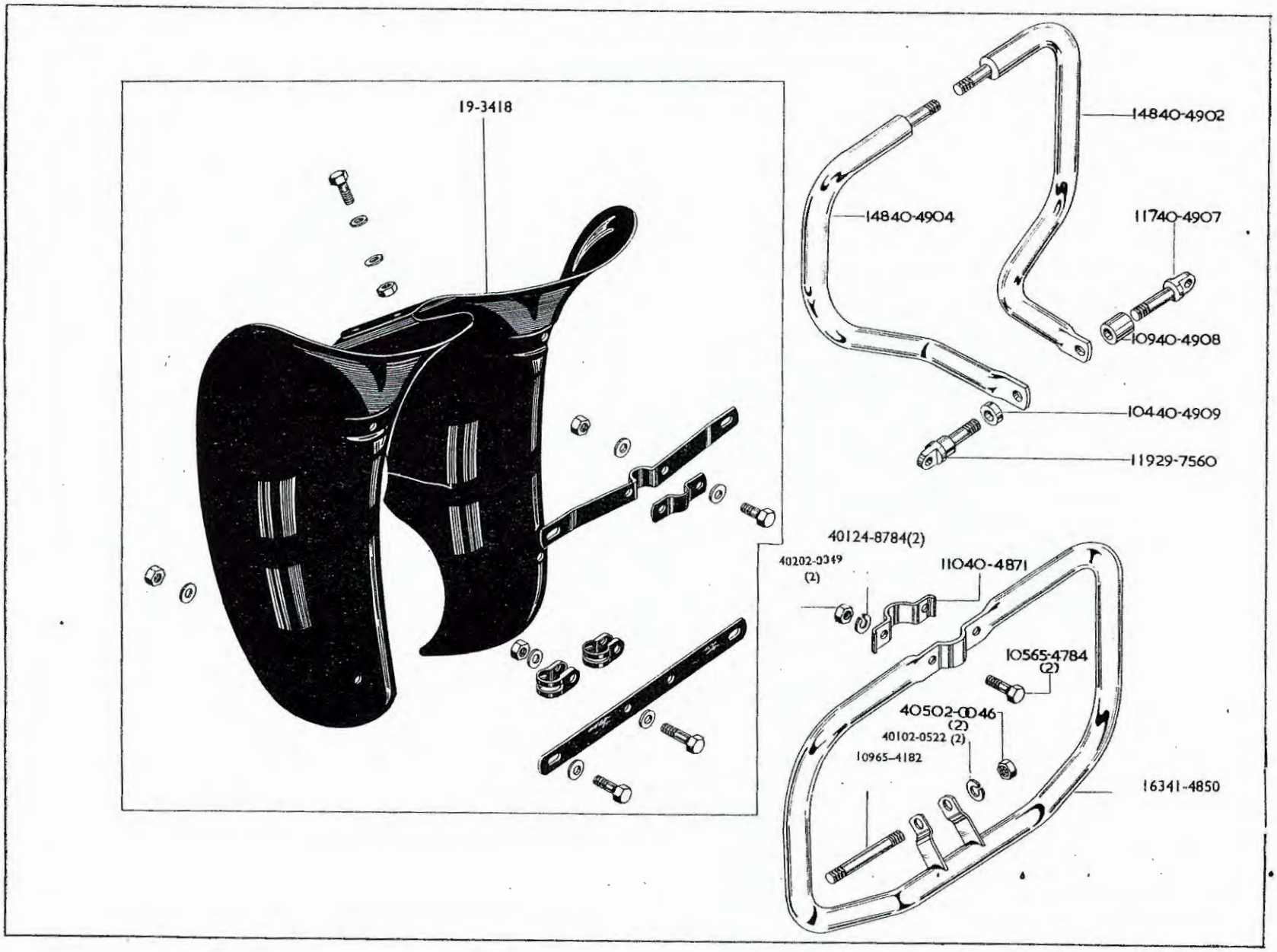
19-3418
14840-4902
14840-4904
11740-4907
10940-4908
10440-4909
11929-7560
40124-8784(2)
40202-0349
(2)
11040-4871
10565-4784
(2)
40502-0046
(2)
40102-0522 (2)
10965-4182
16341-4850

LEGSHIELDS
PROTÈGE-JAMBES
BEINSCHUTZ
GUARDAPIERNAS

SAFETY BARS
PARE-CHOCS
STURZBÜGEL
BARAS DE SEGURIDAD

Model Modèle Typen Modelos	Spares No. No. de pièce Ersatzteil-nr No. de repuesto	Description	Designation	Beschreibung	Descripción	Per Set Par jeu Pr. Satz Juego de
C15 Standard ...	4 05 02-0046	Nut	Ecrou	Mutter	Tuerca	2
C15 Standard ...	4 02 02-0049	Nut	Ecrou	Mutter	Tuerca	2
C15 Standard ...	4 01 02-0522	Lockwasher	Rondelle frein	Sicherungsscheibe	Freno	2
C15 Standard ...	19-3418	Legshields (fibre glass) complete.	Protège-jambes de fibre de verre complet.	Beinbleche Aus Fiberglas Kompl.	Guarapiernas de fibravidrio completa.	2
C15 Standard ...	4 01 24-8784	Lockwasher	Rondelle frein	Sicherungsscheibe	Freno	2
C15 Standard ...	1 19 29-7560	Bolt (o/s)	Boulon (droite)	Schraube (Rechts)	Tornillo (der.)	
C15 Standard ...	1 09 65-4182	Stud	Goujon	Stehbolzen	Esparago	
C15 Standard ...	1 18 40-4871	Clip	Bride	Klammer	Grapa	
C15 Standard ...	1 62 40-4901	Safety Bar complete (Rear)	Pare-chocs complet (Arriére)	Sturzbügel Kompl. (Hinterer)	Baras de seguridad completa (Trasera)	
C15 Standard ...	1 48 40-4902	Safety Bar (n/s) (Rear)	Pare-chocs (gauche) (Arriére)	Sturzbügel (Links) (Hinterer)	Baras de seguridad (izq.) (Trasera)	
C15 Standard ...	1 48 40-4904	Safety Bar (o/s) (Rear)	Pare-chocs (droite) (Arriére)	Sturzbügel (Rechts) (Hinterer)	Baras de seguridad (der.) (Trasera)	
C15 Standard ...	1 17 40-4907	Bolt (n/s)	Boulon (gauche)	Schraube (Links)	Tornillo (izq.)	
C15 Standard ...	1 09 40-4908	Distance Piece (n/s)	Entretoise (gauche)	Distanzrohr (Links)	Distanciador (izq.)	
C15 Standard ...	1 04 40-4909	Distance Piece (o/s)	Entretoise (droite)	Distanzrohr (Rechts)	Distanciador (der.)	
C15 Standard ...	1 05 65-4784	Bolt	Boulon	Schraube	Tornillo	2

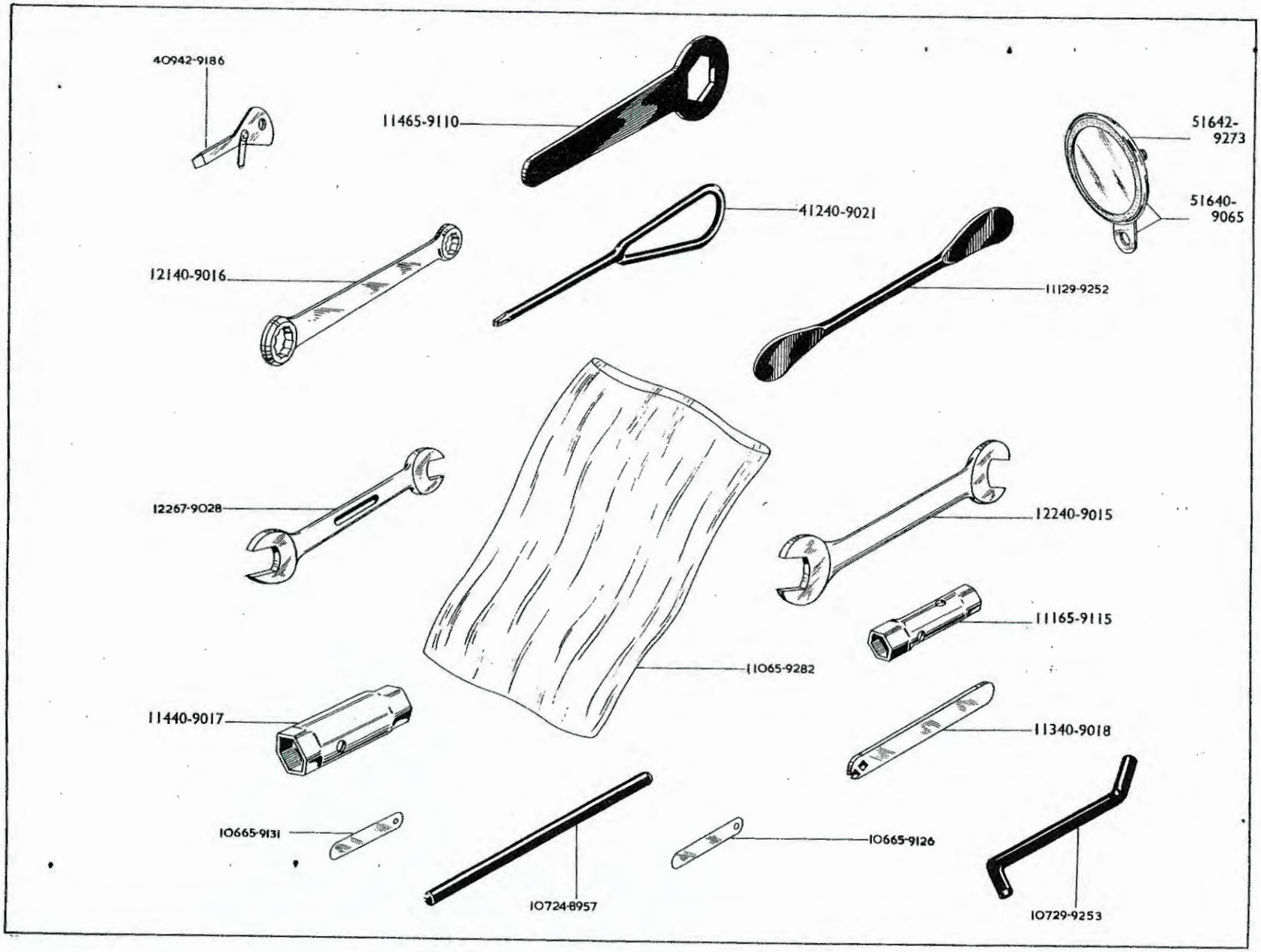
40942-9186
11465-9110
51642-9273
51640-9065
41240-9021
12140-9016
11129-9252
12267-9028
12240-9015
11165-9115
11065-9282
11440-9017
11340-9018
10665-9131
10665-9126
10724-8957
10729-9253

TOOLS
OUTILS
WERKZEUGE
HERRAMIENTOS

Model Modèle Typen Modelos	Spares No. No. de pièce Ersatzteil-nr No. de repuesto	Description	Designation	Beschreibung	Descripción	Per Set Par jeu Pr. Satz Juego de
C15 Trials	4 02 02–2138	Washer	Rondelle	Scheibe	Arandela	
C Group	1 07 24–8957	Tommy Bar	Broche	Montiereisen	Barra para llaves de tubo	
C Group	1 11 29–9252	Tyre Lever	Démonte-pneu	Reifenheber	Palanca desmonta-neumaticos	
C Group	1 07 29–9253	Tommy Bar	Broche	Montiereisen	Barra para llaves de tubo	
C15 Trials	4 06 36–0382	Lockwasher	Rondelle frein	Sicherungsscheibe	Freno	
C Group	1 49 40–9012	Tool Kit complete	Trousse à outils complet	Werkzeuge Kompl.	Herramientos completa	
C Group	1 22 40–9015	Double Ended Spanner	Clé à fourche double	Doppelschraubenschlüssel	Llave de dos bocas	
C Group	1 21 40–9016	Ring Spanner	Clé annulaire	Ringschlüssel	Llave anular	
C Group	1 14 40–9017	Box Spanner	Clé à tube	Steckschlüssel	Llave de tubo	
C Group	1 13 40–9018	Single Ended Spanner	Clé à une fourche	Schraubenschlüssel	Llave de una boca	
C Group	4 12 40–9021	Screwdriver	Tournevis	Schraubenzieher	Destornillador	
C15 Trials	4 16 40–9065	Licence Holder complete	Porte-permis complet	Lizenzhalter Kompl.	Portalicencia completa	
C15 Trials	1 10 42–4473	Bolt	Boulon	Schraube	Tornillo	
C15 Competition ...	4 09 42–9186	Screwdriver	Tournevis	Schraubenzieher	Distornillador	
C15 Standard ...	5 16 42–9273	Licence Holder	Porte-permis	Lizenzhalter	Portalicencia	
C Group	1 14 65–9110	Ring Spanner	Clé annulaire	Ringschlüssel	Llave anular	
C Group	1 11 65–9115	Box Spanner	Clé à tube	Steckschlüssel	Llave de tubo	
C Group	1 06 65–9126	Feeler Gauge (.012 in.)	Cale d'épaisseur (.304 mm.)	Spion (.304 mm.)	Calibrador de cinta (.304 mm.)	
C Group	1 06 65–9131	Feeler Gauge (.014 in.)	Cale d'épasseur (.355 mm.)	Spion (.355 mm.)	Calibrador de cinta (.355 mm.)	
C Group	1 10 65–9282	Tool Bag	Sacoche à outils	Werkzeug Tasche	Bolsa de herramientos	
C15 Trials	1 06 66–4861	Spacer Bush	Bague entretoise	Distanzbüchse	Anillo espaciador	
C Group	1 22 67–9028	Double Ended Spanner	Clé à fourche double	Doppelschraubenschlüssel	Llave de dos bocas	

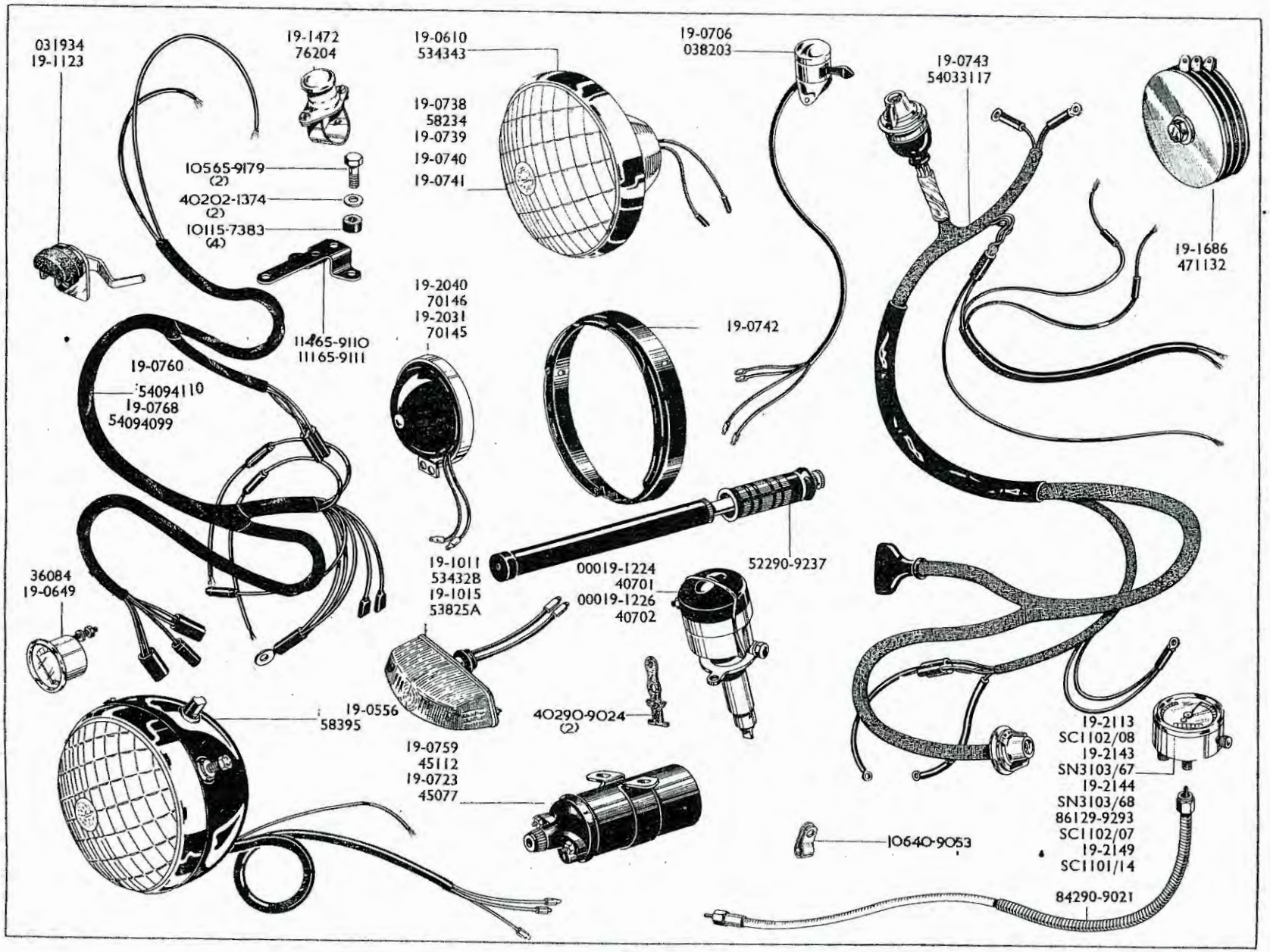
031934
19-1123
19-1472
76204
19-0610
534343
19-0706
038203
19-0743
54033117
19-0738
58234
19-0739
19-0740
19-0741
10565-9179
(2)
40202-1374
(2)
10115-7383
(4)
19-1686
471132
19-2040
70146
19-2031
70145
19-0742
11465-9110
11165-9111
19-0760
54094110
19-0768
54094099
52290-9237
19-1011
53432B
19-1015
53825A
00019-1224
40701
00019-1226
40702
36084
19-0649
19-0556
58395
40290-9024
(2)
19-0759
45112
19-0723
45077
19-2113
SC1102/08
19-2143
SN3103/67
19-2144
SN3103/68
86129-9293
SC1102/07
19-2149
SC1101/14
10640-9053
84290-9021

ELECTRICAL EQUIPMENT
EQUIPEMENT ELECTRIQUE
ELECKTR, AUSRÜSTUNG
EQUIPO ELECTRICO

Model Modèle Typen Modelos	Spares No. No. de pièce Ersatzteil-nr No. de repuesto	Description	Designation	Beschreibung	Descripción	Makers No. No. du fabricant Nr-Hersteller No. fabricante
C Group	4 02 02-1374	Washer	Rondelle	Scheibe	Arandela	
C Group	1 01 15-7383	Rubber Buffer	Butée caoutchouc	Gummipuffer	Tope de goma	
C15 Competition ...	19-0556	Headlamp	Phare complet	Scheinwerfer Kompl.	Faro completa	58395
C15 Standard ...	19-0610	Headlamp Rim	Portière de phare	Scheinwerferring	Anillo porta-cristal para faro.	534343
C15 Standard ...	19-0649	Ammeter	Ampèremètre	Amperemeter	Amperimetro	36084
C15 Standard ...	19-0706	Dipper Switch	Inverseur code phare	Abblendschalter	Conmutador de cruce	038203
C15 Standard ...	19-0723	Coil	Bobine	Spule	Bobina	45077
C15 Standard ...	19-0738	Headlamp Unit	Phare complet	Scheinwerfer Kompl.	Faro completa	58234
C15 Standard ...	19-0739	Headlamp Unit (Export)	Phare complet (Export)	Scheinwerfer Kompl. (Ausfuhr)	Faro completa (Exportación)	
C15 Standard ...	19-0740	Headlamp Unit (Continental).	Phare complet (Continental)	Scheinwerfer Kompl. (Kontinental).	Faro completa (Continental).	
C15 Standard ...	19-0741	Headlamp Unit (French)	Phare complet (Francais)	Scheinwerfer Kompl. (Franzosisch).	Faro completa (Frances)	
C15 Standard ...	19-0742	Light Unit Fixing Ring	Anneau de support de phare	Haltering für Scheinwerfer	Anillo de soporte del faro	
C15 Standard ...	19-0743	Harness complete	Faisceau de câbles complet	Kabelstrang, Kompl.	Juego de cables completa	54033117
C15 Competition ...	19-9759	Coil	Bobine	Spule	Bobina	45112
C15 Scrambles ...	19-0760	Harness	Faisceau de câbles	Kabelstrang	Juego de cables	54094110
Starfire Scrambler Starfire Roadster	19-0768	Harness (American type)	Faisceau de cables (type American).	Kabelstrang (Amerikanischen Typs).	Juego de cables (tipo Americano).	
C15 Trials	19-0768	Harness	Faisceau de câbles	Kabelstrang	Juego de cables	54094099
C15 Standard ...	19-1011	Tail Lamp	Feu rouge arrière	Schlusslampe	Luz roja trasera	53432B
C15 Trials	19-1015	Tail Lamp	Feu rouge arrière	Schlusslampe	Luz roja trasera	53825
C15 Standard, Trials, Starfire Roadster ... Starfire Scrambler ...	19-1123	Stop Lamp Switch	Commutateur de lampe de stop.	Stoplichtschalter	Interuptor para la luz "stop."	031943
C15 Standard ...	19-1224	Distributor	Distributeur	Verteiler	Distribuidor	40701
C15 Competition ...	19-1226	Distributor	Distributeur	Verteiler	Distribuidor	40702
C15 Competition ...	19-1472	Engine Stop Switch	Commutateur de moteur de stop.	Motor-Stop Knopf	Conmutador para la motor "stop."	76204
C15 Competition ...	19-1472	Horn Push	Bouton d'avertisseur	Hupenknopf	Botón de bocina	76204
C15 Standard ...	19-1670	Battery	Batterie	Batterie	Bateria	54028263
C15 Standard ...	19-1686	Rectifier	Redresseur	Gleichrichter	Rectificador	471132
C15 Competition ...	19-2031	Horn	Avertisseur	Hupe	Bocina	70145
C15 Standard ...	19-2040	Horn	Avertisseur	Hupe	Bocina	70146B
C15 Trials	19-2113	Speedometer (k.p.h.)	Compteur de vitesses (k.p.h.)	Tachometer (k.p.h.)	Velocimetro (k.p.h.)	SC1102/08
C15 Standard ...	19-2143	Speedometer (m.p.h.)	Compteur de vitesses (m.p.h.)	Tachometer (m.p.h.)	Velocimetro (m.p.h.)	SN3103/67
C15 Standard ...	19-2144	Speedometer (k.p.h.)	Compteur de vitesses (k.p.h.)	Tachometer (k.p.h.)	Velocimetro (k.p.h.)	SN3103/68
Starfire Scrambler, ... Starfire Roadster ...	19-2149	Speedometer (m.p.h.)	Compteur de vitesses (m.p.h.)	Tachometer (m.p.h.)	Velocimetro (m.p.h.)	SC1101/14
C15 Trials	8 61 29-9293	Speedometer (m.p.h.)	Compteur de vitesses (m.p.h.)	Tachometer (m.p.h.)	Velocimetro (m.p.h.)	SC1102/07
C Group	1 06 40-9053	Clip	Bride	Klammer	Grapa	
C15 Trials	1 14 65-9110	Bracket	Support	Verstrebung	Soporte	
C15 Competition ...	1 11 65-9111	Bracket (American type)	Support (type American)	Verstrebung (Amerikanischen Typs).	Soporte (tipo Americano)	
C Group	1 05 65-9179	Bolt	Boulon	Schraube	Tornillo	
C Group ...	8 42 90-9021	Speedometer Cable	Câble de compteur	Tachometerkabel	Arbol de transmission del velocimetro.	DF1110/21
C Group	4 02 90-9024	Clip (rubber)	Bride (caoutchouc)	Gummiband	Cinta de goma	
C Group	5 22 90-9237	Inflator	Pompe à air	Luftpumpe	Bomba de aire	

British Only

MOTORCYLES AND PARTS INC.

32451 PARKLANE ST.
GARDEN CITY, MI 48135 USA

WWW.BRITISHONLY.COM
INFO@BRITISHONLY.COM

RETAIL: 1-800-278-6659 ***WHOLESALE: 1-800-852-9253*** ***FAX: 1-734-422-9253***

WORLDS LARGEST SELECTION OF FACTORY ORIGINAL NEW AND USED PARTS

45,000 SQ. FT. OF MOTORCYLE PARTS & ACCESSORIES FROM 1911 TO 1984 FOR ALL BRITISH MAKES!
CASH FOR ALL BRITISH BIKES, PARTS AND LITERATURE

SPECIALIZING IN
VINTAGE MOTORCYLCE PARTS

TRIUMPH
Norton
BSA

THE BIGGEST!

ENGINE REBUILDING PARTS
GASKET - SEALS - BEARINGS
BUSHINGS - PISTONS - RINGS
CLUTCHES - TUNE UP PARTS
SPEED EQUIPMENT

THE BEST!

STOCK AND CUSTOM PARTS
SEATS - HANDLEBARS - CHAINS
TIRES - TUBES - EXHAUST PIPES
MUFFLERS - GAS TANKS - FENDERS
RESTORATION PARTS

THE ONLY!

Central Wheel Components · Barnett Clutches & Cables · Classic Transfers Robert Derrick Ltd · Renold · Lucas · Amal · Emgo Your Powersport Supplier · Brituro England · JP Pistons · Hastings · UH

VELOCETTE • ANDOVER NORTON • TEC • HAYNES • P&P SEATING • WASSELL • MORGO
ALPHA BEARINGS • M.A.C. PRODUCTS • JOE HUNT MAGNETOS • J.J. CABLES • BUCHANAN'S
L.A. SLEEVE • MEGACYCLE CAMS • T.J. WASSELL LIMITED • SUDCO INTERNATIONAL
ACE CLASSICS LONDON • CLASSIC GASKETS • BRITISH WIRING • PBM ENGINEERING
TRI-COR ENGLAND • LEAK PROOF SEALS • MCA (ASTON) LIMITED • GARDNER - WESTCOTT

WE ACCEPT VISA - MASTERCARD - DISCOVER - AMERICAN EXPRESS

PARTS SHIPPED WORDLWIDE !!! VISA · MasterCard · Discover · American Express

VISIT OUR EBAY STORE
http://stores.ebay.com/British-Only-Motorcycles-And-Parts

British Only

MOTORCYCLES AND PARTS INC.
32451 PARKLANE ST
GARDEN CITY, MI 48135 USA
PHONE: **800-278-6659**
FAX: **734-422-9253**

Year:	Make:	Model:
Engine #		
Frame #		

WWW.BRITISHONLY.COM
INFO@BRITISHONLY.COM

Quantity	Part #	Description	Each	Amount

Date _____ / _____ / _____ **Customer #** _____ **Salesperson** _____

Card Number _____ **Expires** _____

Name _____

Address _____

City/State/Zip _____

Phone _____ / _____ **Fax** _____

Email _____

Signature _____

Subtotal	
Insurance	
Shipping	
Total	
Michigan Residents Add 6% Sales Tax	
Amount Enclosed	

FOLD

Name _____

Address _____

City _____

State _____ Zip _____

USE
FIRST CLASS
LETTER
POSTAGE

British Only

MOTORCYCLES AND PARTS INC.

32451 PARKLANE ST
GARDEN CITY, MI 48135 USA

FOLD