20-10137C

BSA SPARES

1954/7

Models C10L, C11G, C12

250c.c. S.V. 250c.c. O.H.V.

Rigid, Spring, and Swinging Arm Frames

1954 - 1957

MODELS

C10L	.	250 c.c. S.V. (Spring Frame) 3-speed
C10L	.	250 c.c. S.V. (Spring Frame) 4-speed
C11G	.	250 c.c. O.H.V. (Rigid Frame) 3-speed
C11G	.	250 c.c. O.H.V. (Spring Frame) 3-speed
C11G	.	250 c.c. O.H.V. (Spring Frame) 4-speed
C12	.	250 c.c. O.H.V. (Swinging Arm) 4-speed

British Only

MOTORCYLES AND PARTS INC.

32451 PARKLANE ST.
GARDEN CITY, MI 48135 USA

WWW.BRITISHONLY.COM
INFO@BRITISHONLY.COM

RETAIL: 1-800-278-6659 ***WHOLESALE: 1-800-852-9253*** ***FAX: 1-734-422-9253***

WORLDS LARGEST SELECTION OF FACTORY ORIGINAL NEW AND USED PARTS

45,000 SQ. FT. OF MOTORCYLE PARTS & ACCESSORIES FROM 1911 TO 1984 FOR ALL BRITISH MAKES!
CASH FOR ALL BRITISH BIKES, PARTS AND LITERATURE

SPECIALIZING IN
VINTAGE MOTORCYLCE PARTS

TRIUMPH
Norton
BSA

THE BIGGEST!

ENGINE REBUILDING PARTS
GASKET - SEALS - BEARINGS
BUSHINGS - PISTONS - RINGS
CLUTCHES - TUNE UP PARTS
SPEED EQUIPMENT

THE BEST!

STOCK AND CUSTOM PARTS
SEATS - HANDLEBARS - CHAINS
TIRES - TUBES - EXHAUST PIPES
MUFFLERS - GAS TANKS - FENDERS
RESTORATION PARTS

THE ONLY!

Central Wheel Components · Barnett Clutches & Cables · Classic Transfers Robert Derrick Ltd · Renold · Lucas · Amal · Emgo Your Powersport Supplier · Brituro England · JP Pistons · Hastings · UH

VELOCETTE • ANDOVER NORTON • TEC • HAYNES • P&P SEATING • WASSELL • MORGO
ALPHA BEARINGS • M.A.C. PRODUCTS • JOE HUNT MAGNETOS • J.J. CABLES • BUCHANAN'S
L.A. SLEEVE • MEGACYCLE CAMS • T.J. WASSELL LIMITED • SUDCO INTERNATIONAL
ACE CLASSICS LONDON • CLASSIC GASKETS • BRITISH WIRING • PBM ENGINEERING
TRI-COR ENGLAND • LEAK PROOF SEALS • MCA (ASTON) LIMITED • GARDNER - WESTCOTT

WE ACCEPT VISA - MASTERCARD - DISCOVER - AMERICAN EXPRESS

PARTS SHIPPED WORDLWIDE !!! VISA · MasterCard · Discover · American Express

VISIT OUR EBAY STORE
http://stores.ebay.com/British-Only-Motorcycles-And-Parts

British Only

MOTORCYLES AND PARTS INC.

32451 PARKLANE ST.
GARDEN CITY, MI 48135 USA

WWW.BRITISHONLY.COM
INFO@BRITISHONLY.COM

RETAIL: 1-800-278-6659 ***WHOLESALE: 1-800-852-9253*** ***FAX: 1-734-422-9253***

WORLDS LARGEST SELECTION OF FACTORY ORIGINAL NEW AND USED PARTS

45,000 SQ. FT. OF MOTORCYLE PARTS & ACCESSORIES FROM 1911 TO 1984 FOR ALL BRITISH MAKES!
CASH FOR ALL BRITISH BIKES, PARTS AND LITERATURE

SPECIALIZING IN
VINTAGE MOTORCYLCE PARTS

TRIUMPH
Norton
BSA

THE BIGGEST!

ENGINE REBUILDING PARTS
GASKET - SEALS - BEARINGS
BUSHINGS - PISTONS - RINGS
CLUTCHES - TUNE UP PARTS
SPEED EQUIPMENT

THE BEST!

STOCK AND CUSTOM PARTS
SEATS - HANDLEBARS - CHAINS
TIRES - TUBES - EXHAUST PIPES
MUFFLERS - GAS TANKS - FENDERS
RESTORATION PARTS

THE ONLY!

Central Wheel Components · Barnett Clutches & Cables · Classic Transfers Robert Derrick Ltd · Renold · Lucas · Amal · Emgo Your Powersport Supplier · Brituro England · JP Pistons · Hastings · UH

VELOCETTE • ANDOVER NORTON • TEC • HAYNES • P&P SEATING • WASSELL • MORGO
ALPHA BEARINGS • M.A.C. PRODUCTS • JOE HUNT MAGNETOS • J.J. CABLES • BUCHANAN'S
L.A. SLEEVE • MEGACYCLE CAMS • T.J. WASSELL LIMITED • SUDCO INTERNATIONAL
ACE CLASSICS LONDON • CLASSIC GASKETS • BRITISH WIRING • PBM ENGINEERING
TRI-COR ENGLAND • LEAK PROOF SEALS • MCA (ASTON) LIMITED • GARDNER - WESTCOTT

WE ACCEPT VISA - MASTERCARD - DISCOVER - AMERICAN EXPRESS

PARTS SHIPPED WORDLWIDE !!! VISA · MasterCard · Discover · American Express

VISIT OUR EBAY STORE
http://stores.ebay.com/British-Only-Motorcycles-And-Parts

CATALOGUE OF

All communications relating to Spare Parts or Repairs to Motor Cycles to be addressed to B.S.A. Motor Cycles Ltd. Service Department, Montgomery Street, Birmingham, 11

B.S.A. MOTOR CYCLES LTD.

Registered Offices and Works - - - ARMOURY ROAD, BIRMINGHAM, 11
Telephones: BIRMINGHAM VICTORIA 2381 (30 lines) *Telegrams and Cables:* SELMOTO, BIRMINGHAM"

Service, Spares and Repairs Department

Telephones: VICtoria 2234 (6 lines)
Telegrams and Cables:, "SELSERV BIRMINGHAM"

Contractors to Her Majesty's Government, the War Office, the Admiralty, the Post Office, the Colonial and Foreign Governments

M.E908-2

Copyright B.S.A. Co. Ltd.

Printed in England
October, 1956

Stockists
Engine
Gearbox
Clutch and Front Chaincase
Frame and Fittings
Rear Suspension
Front Fork and Fittings
Front Hub and Wheel Fittings
Rear Hub and Wheel Fittings
Petrol Tank Handlebar Dual Seat and Battery Carrier
Mudguards Oil Tank Toolbox Chainguards and Silencer
Petrol Tank Handlebar Battery Carrier and Dual Seat
Rear Mudguard Chainguards Rear Brake Rod Silencer
Prop Stand Mudguards Oil Tank Toolbox and Chainguard
Tools and Sundries
Legshields and Bumper Bars
Electrical Equipment
Numerical Index

GENERAL INDEX

	Page
Carburetter Settings	78
Clutch and Front Chaincase	22–24
Colour Finishes	3
Electrical Equipment	72–76
Engine (General)	10–14
Engine and Frame Markings	77
Frame and Fittings	24–34
Front Hub and Wheel Fittings	41–46
Front Fork and Fittings	36–41
Gearbox	14–22
Index (Numerical)	79–94
Legshields	70–71
Legshields add Bumper Bars	72–73
Mudguards, Oil Tank, Toolbox, Chainguards, Silencers	55–61
Petrol Tank, Handlebar, Dual Seat, Battery Carrier	53–55, 61–64
Prop Stand, Mudguards, Oil Tank, Toolbox and Chainguard	66–68
Pistons	78
Rear Hub and Wheel Fittings	47–53
Rear Mudguard, Chainguard, Rear Brake Control and Silencer	64–66
Rear Suspension	34–36
Spares and Repairs	4
Stockists	5–9
Tools and Sundries	69–70

SUFFIX NUMBERS TO BE USED TO IDENTIFY VARYING FINISHES FOR "C" GROUP MOTOR CYCLES.

/1. Cadmium.
/3. Bright Chrome.
/7. Black Enamel.
/36. Maroon and Chrome, lined gold (Petrol Tank) (C11G), (C12).
/37. B.S.A. Maroon (Hubs) (C11G), (C12).
/40. Dark Green (Hubs) (C10L).
/41. Chrome and Maroon (Wheels) (C11G), (C12).
/42. Chrome and Dark Green (Wheels) (C10L).
/58. Dark Green, Light Green, lined gold (Petrol Tanks) (C10L).
/72 Maroon and Green Panel, lined gold and maroon (Petrol Tank) (C12).
/74 Dark Green, Chrome Panel, lined gold (Petrol Tank) (C10L).

When ordering components with varying finishes—i.e., Petrol Tanks, Wheels, Hubs, Rims—please state finish required by adding the appropriate suffix number to the part number.

Example—Petrol Tank, Model C11G, Maroon and Chrome, lined gold.
29-7802/36.

SPARKING PLUGS.

Champion Sparking Plugs Ltd., Feltham, Middlesex.

ELECTRICAL EQUIPMENT.

J. Lucas Ltd., Great King Street, Birmingham.

Messrs. Wico-Pacy, Denbigh Road, Bletchley, Bucks.

SPEEDOMETERS.

Smith's Motor Accessories Ltd., Cricklewood Works, London.

Stockists
Engine
Gearbox
Clutch and Front Chaincase
Frame and Fittings
Rear Suspension
Front Fork and Fittings
Front Hub and Wheel Fittings
Rear Hub and Wheel Fittings
Petrol Tank Handlebar Dual Seat and Battery Carrier
Mudguards Oil Tank Toolbox Chainguards and Silencer
Petrol Tank Handlebar Battery Carrier and Dual Seat
Rear Mudguard Chainguards Rear Brake Rod Silencer
Prop Stand Mudguards Oil Tank Toolbox and Chainguard
Tools and Sundries
Legshields and Bumper Bars
Electrical Equipment
Numerical Index

SPARES

Please carry out the following in order to ensure prompt attention and correct execution of orders.

2. When ordering parts the frame and engine numbers must be quoted. The former will be found stamped on the seat or the head tube lug and the latter on the nearside of the crankcase immediately below the cylinder base. It is essential that the component numbers of the parts required be clearly stated.
IMPORTANT.—In quoting engine and frame numbers the full numbers including prefix letters, MUST BE GIVEN.

B.S.A. Motor Cycles Ltd. reserve the right to alter the designs or any constructional details of their manufactures at any time without giving notice.

COPY OF B.S.A. MOTOR CYCLE SPARE PARTS GUARANTEE

We give the following guarantee with B.S.A. Motor Cycle Spare Parts, instead of the guarantee implied by statute or otherwise, as to the quality or fitness of such parts for the purpose for which they are intended, any such implied guarantee being in all cases excluded, nor can any claim for consequential damages be entertained.

WE GUARANTEE, subject to the conditions mentioned below, that all precautions which are usual and reasonable have been taken by us to secure excellence of materials and workmanship, but this guarantee is to extend and be in force for six months only from the date of purchase, and the damages for which we make ourselves responsible under this guarantee are limited to the replacement of any part which may have proved defective.

WE UNDERTAKE, subject to the conditions mentioned below, to make good at any time within six months any defects in these respects. As motor cycles are easily liable to derangement by neglect or misuse, this guarantee does not apply to defects caused by wear and tear, misuse, or neglect. The term "misuse" shall include among others the following acts: The attaching of a sidecar to the motor cycle in such a manner as to cause damage or calculated to render the latter unsafe when ridden; the use of a motor cycle or a motor cycle and sidecar combined when carrying more persons or a greater weight than they were designed to bear.

CONDITIONS OF GUARANTEE

We do not guarantee the specialities of other firms, such as tyres, electrical equipment, saddles, etc., or of any component part supplied to the order of the purchaser differing from our standard specifications, whether supplied with our motor cycles or otherwise.

B.S.A. OVERSEAS DISTRIBUTORS

ADEN	Arabian Trading Co., Maafla Garage, Aden.
AFGHANISTAN	Levetus Ltd., 194, Bishopsgate, London, E.C.2.
ALASKA	Hap Alzina, 3074, Broadway, Oakland 11, California, U.S.A.
ALGERIA	Movea, 79, Ave. de la Grande Armee, Paris XVI, France, operating through: Societe Algerienne de Distribution d' Equipements Britanniques, 1, rue d' Assus Alger, Algiers.
ARGENTINA ...	Ditlevsen & Cia Ltda., Av. Ingeniero Huergo 1335, Buenos Aires.
AUSTRALIA	
South Australia ...	J. N. Taylor & Co., 121/5, Grenfell St., Adelaide.
Victoria	Finlay Bros. (Pty) Ltd., 316/20, Elizabeth St., Melbourne C.1.
West Australia ...	Mortlock Bros., 914, Hay Street, Perth.
N.S.W. and Queensland	Bennett & Wood Ltd., Cor. Bathurst and Pitt Sts., Sydney and 128, Wickham St., Valley, Brisbane.
Tasmania ..	Sim King (Pty) Ltd. (Box A. 2400 G.P.O.), 63, Brisbane Street, Launceston.
AUSTRIA	A.u.R. Hinteregger, Johnstrasse 31, Vienna XV.
AZORES	Hayes & Travell Ltd., P.O. Box 56, Ponta Delgada, St. Michael's.
BAHAMAS	Nassau Bicycle Co., P.O. Box 191, Nassau.
BAHREIN	United Commercial Agencies, P.O. Box 166, Bahrein Islands, Persian Gulf.
BELGIAN CONGO.	
Albertville ...	La Sima S.C.R.L., P.O. Box 671, Elizabethville.
Bukavu	Touriel Motors, P.O. Box 796, Bukavu.
Coquilhatville ...	Ets. Fr. Mechant et Fils, P.O. Box 786, Leopoldville.
Elizabethville ...	La Sima, Boite Postale 671, Elizabethville.
Leopoldville ...	Ets. Fr. Mechant et Fils, P.O. Box 786, Leopoldville.
Usumbura ...	Capelluto Touriel & Co., P.O. Box 501, Usumbura, Ruanda Urundi.
Stanleyville ...	Nassers Trading Co. Ltd., P.O. Box 71.
BELGIUM	Famo S.A., 571, Grande Chaussée, Berchem, Antwerp.
BERMUDA	Holmes, Williams & Purvey, Ltd., P.O. Box 444, Pembroke.
BOLIVIA	Balfour Williamson Merchant Shippers Limited, 7, Gracechurch St., London, E.C.3, operating through: Gibbs Williamson (Bolivia) Ltda., Casilla 957, La Paz.
BORNEO.	
Br. N. Borneo ...	Harrisons & Crosfield (Borneo) Ltd., Import Dept., Jesselton.
Sarawak	The Borneo Co. Ltd. (P.O. Box 141), Thomson Road, Kuching.
BOUGAINVILLE ...	Bennett & Wood Ltd., Corner Pitt and Bathurst Streets, Sydney, N.S.W. Australia.
BRAZIL	Mesbla S.A., Rua de Passeio 48/54, Rio de Janeiro.
and branches at ...	Sao Paulo (Est. de Sao Paulo)—Rua 24 de Maio, 141.
BRAZIL	Porto Alegre (R.G. do Sul)—Rua Voluntarios de Patria 524.
	Belo Horizonte (Minas Gerais)—Rua Curitiba, 444-464.
	Recife (Pernambuco)—Rua da Palma 251'
	Pelotas (R.G. do Sul)—Praca Cel. P. Osorio, 152-154.
	Niteroi (Est. do Rio)—Rua Visconde Rio Branco 521-523.
	Marilia (Sao Paulo)—Rua 9 de Julho 1001.
	Victoria (Espirato Santo)—Av. Victoria 719-727
	Salvador (Bahia)—Av. Frederico Pontes, 102-104.
BRITISH E. AFRICA.	
Kenya	Uganda Co. (Africa) Ltd., P.O. Box 1, Kampala, Uganda.
Tanganyika ...	International Motor Mart Ltd., P.O. Box 409, Dar-es-Salaam.
Uganda	The Uganda Co. (Africa) Ltd., P.O. Box 1, Kampala.
Zanzibar	Musa Jusabani, P.O. Box 366, Zanzibar.
BRITISH GUIANA	Bookers Stores Ltd. 49/53, Water St., Georgetown.
BRITISH HONDURAS	C. Melhado & Sons, Belize.
BRITISH SOMALILAND	Arabian Trading Co., Berbera.
BRITISH W. AFRICA.	
Gambia	Cie. F.A.O., Bathurst.
Gold Coast ...	Cie. F.A.O., P.O. Box 70, Accra
Nigeria	Cie. F.A.O., P.O. Box 160, Lagos.
Sierra Leone ...	Cie. F.A.O., Freetown.
	(*and other branches throughout territory*)
BRITISH W. INDIES	
Antigua	Stephen R. Mendes Ltd., Colonial House, 18, Thames St., St. John's
Leeward Is. ...	
Barbados	Redman & Taylors Garage Ltd., P.O. Box 269, Church Street, Bridgetown.
Dominica	A. C. Shillingford & Co., P.O. Box 123, The Garage, Roseau.
Leeward Is. ...	
Grenada	Clean's Garage, St. Patricks.
Windward Is. ...	
Jamaica	B.S.A. Agency Ltd., 9, King Street, Kingston.
St. Kitts	J. W. Thurston & Co. Ltd., Fort St., Basseterre.
Leeward Is. ...	
St. Lucia	Peter & Co, Castries.
Windward Is. ...	
Montserrat ...	M. S. Osborne, Trescellian House.
Leeward Is. ...	
Nevis	J. W. Thurston & Co. Ltd., Fort St., Basseterre, St. Kitts.
Leeward Is. ...	
St. Vincent ...	The Caribbean Trading Co., P.O. Box 27, Kingstown.
Windward Is. ...	
Trinidad	Sports & Games Ltd. (P.O. Box 271), 28, Henry Street, Port of Spain.
BURMA	Levetus Limited, 194, Bishopsgate, London, E.C.2, operating through: Fairweather Richards & Co. Ltd., 67/69, Lewis St., Rangoon.
CANADA.	
British Columbia and Alberta	Fred Deeley Ltd., 606, E. Broadway Ave., Vancouver.
Newfoundland ...	Edwin Murray Ltd., 256, Water Street, St. John's.
Nova Scotia ...	Mr. L. C. Comeau, Comeauville, Nova Scotia.

CANADA.

Ontario	Brown's Sports & Cycle Co. Ltd., 343, Yonge St., Toronto.
Quebec	Arlington Cycle & Sports Ltd., 1194, University St., Montreal.
Saskatchewan ...	Nicholson Bros., 245, Second Ave. North, Saskatoon.
CANARY ISLANDS	J. Gonzalez Suarez, (Apartado, No.9), Puerto de la Luz, Las Palmas.
CEYLON	Cargills (Ceylon) Ltd., Fort, Colombo. P.O. Box 23.
CHILE	Balfour Williamson Merchant Shippers Limited, 7, Gracechurch St., London, E.C.3, operating through: Williamson Balfour & Co. S.A., Santiago.
COOK ISLANDS ...	United Island Traders Ltd. (W. H. Watson), Raratonga.
COLOMBIA ...	Balfour Williamson Merchant Shippers Limited, 7, Gracechurch St., London, E.C.3, operating through: Tracey & Co. S.A., Apartado 1196, Bogota.
COSTA RICA ...	Tiberio Paganella, Ciclo Sport La Casa del Ciclista, Apartado 2321, San Jose.
CUBA	Distribudora de Motocicletas Britanicas, S.A. Padre Varela, Havana, Cuba. P.O. Box 962.
CYPRUS	B. C. Petrides & Co., P.O. Box 91, 7, Kyrenia Street, Nicosia.
CYRENAICA ...	Metcalfe Eng. Co. Ltd., P.O. Box 216, Benghazi.
CZECHOSLOVAKIA	Gorma Ltd, 70, Pall Mall, London S.W.1.
DENMARK	B.S.A. Motors & Cycles (H. V. Hansen), G1, Kongevej 127–131. Copenhagen, V.
DOMINICAN REPUBLIC	General Sales Co. Apartado 746 Ciudad Trujillo, R.D.
DUTCH GUIANA...	The New Motor Supply & Importing Co. (P.O. Box 422), Watermolen St., Paramaribo.
ECUADOR	Balfour Williamson Merchant Shippers Limited, 7, Gracechurch St., London, E.C.3, operating through: Sociedad Anonima Comercial, Anglo-Ecuatoriana, Apartado 410, Guayaquil.
EGYPT	T. W. M. Forsyth, 7 Sharia Maspero, Cairo.
ERITREA	Arabian Trading Co. Ltd., Viale Blattenchieta Lorenzo Tazaz, 29–33, Asmara.
ETHIOPIA	Arabian Trading Co. (P.O. Box 23), 155, Cunningham Street, Addis Ababa.
FALKLAND ISLANDS	The Falkland Island Co. Ltd., Port Stanley. McAtasney & Sedgwick, Falkland Store, Stanley.
FAROE ISLANDS	Charles Smith, Trondargoth 35, Tnorshann, Faroe Islands.
FIJI	Morris Hedstrom Ltd., Suva.
FINLAND	S. & N. Osakeyhtio, Nestlanadgaten 19, Elsinfors.
FRANCE	Movea S.A., 79, Ave. de la Grande Armée, Paris XVIe.
FR. ANTILLES	
Guadeloupe ...	Maison F. D'Alexis 44, Rue Frebault, Pointe-a-Pitre.
FRENCH EQ. AFRICA	The United Africa Co., Unilever House, Blackfriars, E.C.4.
FRENCH INDIA ...	Levetus Ltd., 194, Bishopsgate London, E.C.2.
FRENCH INDO CHINA	Movea S.A., 79. Ave. de la Grande Armée, Paris XVIe, France.
FRENCH MOROCCO	African and Eastern (Near East) Ltd., P.O. Box 519, Casablanca.
FRENCH SOMALILAND	Arabian Trading Co., Djibouti.
FRENCH W. AFRICA	
Dahomey	Cie. F.A.O., Service Autos, Cotonou.
French Cameroons	Cie. F.A.O., Duala.
Ivory Coast ...	Cie. F.A.O., Abidjan.
Mauritania ...	The United Africa Co., Unilever House, Blackfriars, E.C.4, operating through: Compagnie Du Niger Francais, Boite Postale No. 230, Saint-Louis, Senegal.
French Guinea ...	Cie. du Niger Français, Conakry.
French Sudan ...	Cie. du Niger Français, Bamako.
Senegal	Nouvelle Societé Commerciale Africaine, 31 Boulevard Pinet-Laprade, Dakar.
GERMANY (West)...	Aschoff & Co., C.M.B.H. Oppumer Strasse 67/69, Kreteld.
(East)...	Gorma Ltd., 70, Pall Mall, London, S.W.1.
GIBRALTAR ...	English Garage Ltd., Queensway, Gibraltar.
GILBERT and ELLICE ISLANDS	Morris Hedstrom Ltd., Apia, Samoa.
GREECE	D. F. Papoutsas, 56, Chalcocondillis St., Athens.
GUADELOUPE ...	Maison F. D'Alexis. 44, Rue Frebault, Pointe-à-Pitre.
GUATEMALA ...	H. J. Nicol & Co. S.C., 8A Avenida Sur No. 109, Guatemala City.
HADRAMUT ...	Arabian Trading Co., Esplanade, Aden.
HAITI	Yves Bajeux, Grande Rue 185, (P.O. Box 856), Port-au-Prince. Gustave & Mastroti, Rues 12B, Caphaitien.
HAWAII ISLANDS	Schubert's Cyclery Stores (P.O. Box 3443), Cor. Archer and South King Sts., Honolulu, Hawaii.
HONDURAS ...	M. Liebers, Apartado 51, Tegucigalpa, D.C.
HONG KONG ...	Levetus Limited, 194, Bishopsgate. London, E.C.2, operating through: British Bicycle Co., 16, Hennessy Road.
HUNGARY	Gorma Ltd., 70, Pall Mall, London S.W.1.
ICELAND	Falkinn Ltd., P.O. Box 997, Rejkjavik.
INDIA	Levetus Limited., 194, Bishopsgate, London, E.C.2., and branches in Delhi, Bombay and Calcutta, operating through:
Bombay	Noble Cycle & Motor Co., 225, Hornby Rd., Fort, Bombay.
Calcutta	Bentinck Cycle Co., 1/2, Chowringhee Rd., Calcutta.
Jullundur ...	Janki Dass & Sons, Main Street, Jullundur.
Madras	Union Co. (Motors) Ltd., Mount Rd. Madras.

INDIA

Jaipur	Tandon Bros., 16, Daryaganj, Delhi 7.
New Delhi ...	Peary Lal & Sons Ltd., Queen's Way, New Delhi.
Delhi	Peary Lal & Sons (E. Punjab) Ltd., Peary Lal Bldg., Kashmere Gate, Delhi 6.
Allahabad... ...	Coloneiganj Cycle & Motor Agency, 12 P.D. Tandon Rd., Allahabad,
Ambala	B. K. Mittal & Co., Stall Rd., Ambala. Cantt.
Kanpur	Calcutta Motor & Cycle Co., 26/51, Birhani Rd., Kanpur.
Cuttack	Pearl Cycle Stores, Naya Serak, Cuttack.
Lucknow	Motor Cycle House, 11, Station Rd., Lucknow.
Dehra Dun ...	Nawal Kishore and Son, 9, Esplanade Road, Delhi, 6.
Nagpur	Bombay Cycle Stores Co. Ltd., Mahal, Nagpur City.
Ranchi	Kedia Cycle Stores, Main Rd., Ranchi.
Jamnagar ...	Imperial Trading Co., Ranjit Rd., Jamnagar.
Meerut	Mittal Bros., Bombay Bazaar, Meerut.
Hyderabad ...	Sohrab Bros., Troop Bazar, Hyderabad—DN.

INDONESIA ..	Platon Trading Co. Ltd., Postkommel Dak 766, Djakarta-Kota.
IRAQ	Mr. J. A. Noury, 2/111, Rashid Street, Baghdad, Iraq.
IRISH REPUBLIC	Huet Bros. Ltd., 7 & 8, Bachelor's Walk, Dublin, C.9.
ISRAEL	S. Gousman & Son Ltd., 16, Hakishon St., Tel-Aviv.
ITALIAN SOMALILAND	Arabian Trading Co., Esplanade, Aden.
ITALY (North) ...	Ve Ba & C. Via Cenisio 4, Milan.
(South)	Anglitalia S.P.A., Via Lazio 22, Rome
JAPAN	Balcom Trading Co. Inc., Fukoku Building No. 1, 2-Chome Uchisaiwai-Cho, Chiyoda-Ku, Tokyo.
KOREA	Balcom Trading Co. Inc., Fukoku Building No. 1, 2-Chome Uchisaiwai-Cho, Chiyoda-Ku, Tokyo.
KUWAIT	Abdul Rahman Albisher & Zaid Alkazemi, Kuwait, Persian Gulf,
LEBANON	Associated Commercial Enterprise. P.O. Box 3270, Air Moureisseh, Beirut.
LIECHENSTEIN ...	Fibag, Postfach Zurich 39, Zurich, Switzerland.
LIBERIA	Cie. F.A.O., Monravia.
LIBYA	
Tripolitania ...	F.lli Pagani Soc. Coll. 113, Sciara Mizran, Tripoli.
Cyrenaica ...	Metcalfe Eng. Co. Ltd., P.O. Box 216, Benghazi.
LUXEMBOURG ...	Famo S.A., 571 Grande Chaussée, Berchem, Antwerp, Belgium.
MADAGASCAR ...	Movea, S.A., 79 Ave. de la Grande Armée, Paris XVIe, France.
MADEIRA	A. Gomez Loja, P.O. Box 52, Funchal.
MALAYA	Cycle & Carriage Co. (1926) Ltd. (P.O. Box 305), Orchard Road, Singapore.
MALTA	G. Anastasi, 27 and 35 opp. St. John's Church, Valletta.
MAURITIUS ...	Lising & Co., 32, Royal St. Port Louis.
MEXICO	Watson Phillips & Cia. Succs. S.A., Apartado Postal No. 67, Mexico 6 D.F.
	Alejandro Dominguez Font Calle 60, Num. 536, Merida, Yucatan.
NETHERLANDS ...	Hart Nibbrig & Greeve N.V., Parkstraat 91A, The Hague.
NETHERLANDS ANTILLES (D.W.I.)	Caribbean Sales (P.O. Box 43), Noordstraat No. 543, Orangestad, Aruba.
	Caribbean Sales, P.O. Box 135 Willemstad, Curacao.
NEW BRITAIN ...	Bennett & Wood Pty. Ltd., Corner Pitt and Bathurst Streets, Sydney, N.S.W. Australia.
NEW CALEDONIA	Agence Automobile, Boite Postale 176, Nouméa.
NEW GUINEA ...	Bennett & Wood Ltd., Corner Bathurst and Pitt Streets, Sydney, N.S.W., Australia.
NEW HEBRIDES ...	Bennett & Wood Ltd., Corner Pitt and Bathurst Streets, Sydney, N.S.W. Australia.
NEW IRELAND ...	Bennett & Wood Ltd., Corner Pitt and Bathurst Streets, Sydney, N.S.W. Australia.
NEW ZEALAND ...	Skeates & White Ltd., 48, Fort St., Auckland, C1.
NICARAGUA ...	J. A. Estrada & Cia. Ltda., (Apartado No. 11), Avenida Roosevelt, Managua.
NORWAY	Erling Sande, Grubbegaten 2/4, Oslo.
NYASALAND ...	African Lakes Corp. Ltd., Mandala, Blantyre.
OKINAWA	Balcom Trading Co. Inc., Fukoku Building No. 1, 2-Chome Uchisaiwai-Cho, Chiyoda-Ku, Tokyo.
PAKISTAN ...	Levetus Ltd., 194, Bishopsgate, London, E.C.2, and their branches at Karachi and Dacca, operating through:
(WEST)	Shahnawaz Ltd. (P.O. Box 655), Victoria Rd., Karachi.
(EAST)	Crescent Cycle & Motor Co., 161, Nawabpur Rd., Dacca.
PANAMA	Panamusica S.A., P.O. Box 3227, Panama.
PAPUA	Bennett & Wood Ltd., Corner Pitt and Bathurst Streets, Sydney, N.S.W. Australia.
PARAGUAY ...	J. & F. Perez, 14 de Mayo Pte Franco, Asuncion.
PERSIA	H. Mohammed Tavakolipoor, Ave. Boozatjomehri, Tehran.
PERU	Balfour Williamson Merchant Shippers Limited, 7, Gracechurch St., London, E.C.3, operating through:
	Milne & Co. S.A., Apartado 684, Lima.
PHILIPPINES ...	Campos Rueda & Sons, 421/7, Juan Islands, Manilla.
POLAND	Gorma Ltd., 70, Pall Mall, London, S.W.1.
PORTUGAL (North)	Silva Neto & Ca. Lda., Anadia.
(South)	Stand Vidal, Travessa de S. Mamede 23/5, Lisbon.
PORTUGUESE EAST AFRICA	F. L. Simoes & Co., P.O. Box 13, Beira.
	A. A. Azevedo, P.O. Box 482, Lourenco Marques.
	Gordhandas Valabhdas & Filhos, P.O. Box 45, Mozambique.
	Auto Sobressalentes Ltd., P.O. 206, Quelimane.

PORTUGUESE WEST AFRICA ... ... Casa Americana Ltda, Caixa Postal 1208, Luanda.

PORTUGUESE GUINEA
Nunes & Irmao, C.P. 83, Bissau.

PORTUGUESE INDIA
M.S.B. Caculo, Nova Goa.

PUERTO RICO ... M. Castro Fernandez & Co. Ltd, (P.O. Box 1579), San Juan 7. Puerto Rico.

QATAR ... ... Kasem and Abdulla Sons of Darwish Fakhroo, Qatar, Persian Gulf

REUNION ISLES... Movea S.A., 79, Avenue de la Grande-Armee, Paris XVIe, France.

RHODESIA (NORTHERN)
Mufulira Motors Ltd., P.O. Box 155, Mufulira, Nth. Rhodesia.
Pals Motors, P.O. Box 51, Lusaka, Northern Rhodesia.
The British Cycle & Sports Co., P.O. Box 274, Livingstone.

RHODESIA (SOUTHERN)
Van Rooyen Motor Cycle Works Ltd. 124, Gray St., Bulawayo, Southern Rhodesia.
Alick Stuart Ltd., P.O. Box 306, Bulawayo, Southern Rhodesia.
Kimpton's (Midlands) Ltd., P.O. Box 91, Gwelo.
Gammon Bros., P.O. Box 151, Umtali.
Johnstons Motor Cycle Supplies (Pvt) Ltd., 28, Pioneer St., Salisbury.

ROUMANIA ... Gorma Ltd., 70, Pall Mall, London, S.W.1.

SALVADOR ... La Agencia Nacional Ltda., Avenida Independencia, San Salvador.

SAMOA ... ... Morris Hedstrom Ltd., Apia.

SARAWAK ... ... Borneo Co. Ltd., Sackville House, Fenchurch Street, London, E.C.3.

SAUDI ARABIA ... Ebrahim Abdullah Juffali & Bros., P.O. Box 297, Jeddah.

SEYCHELLES ... Chenard & Co., P.O. Box 5, Mahe

SOLOMON ISLANDS
Bennett & Wood Ltd., Corner Pitt and Bathurst Streets, Sydney, N.S.W. Australia.

SOUTH W. AFRICA Terry's Motors, P.O. Box 784, Windhoek.

SPAIN ... ... Commercial Yacobi, Piamonte 16, Madrid.

SPANISH GUINEA J. Gonzalez Suarez, (Apartado No.9), Puerto de la Luz, Las Palmas, Canary Islands.

SPANISH MOROCCO
Marrache & Levy, (P.O. Box 132), Casa Riera 26/28, Tangier.

SUDAN ... ... Geo. Djerdjian & Sons, P.O. Box 269, Khartoum.

SWEDEN ... ... A-B. E. Fleron, Malmo.

SWITZERLAND ... Fibag, Postfach Zurich 39, Zurich.
Van Leisen S.A., 34, Rue de la Synagogue, Geneva.

SYRIA ... ... M. Chafik el Khiami & Co., Rue el Nasr 169, Damascus, Syria.

TAHITI ... ... H. Jean Hamon, Papeete.

TANGIER ... Marrache & Levy, (P.O. Box 132), Casa Riera 26/28, Tangier.

THAILAND ... Triangle Co. Ltd., (P.O. Box 70), Asdang Rd., Bangkok.

TONGA ... ... E. H. Jones, P.O. Box 34, Nukualofa, Tonga Islands.

TRIPOLITANIA ... F.lli Pagani Soc. Coll., 113, Sciara Mizran, Tripoli, Libya.

TUNISIA ... ... Etabs. Jean Borg, 35, Rue de Marseille, Tunis.

TURKEY ... ... Turkish Automobile Trade Co., Beyoglu Istiklal Caddesi 239, (P.O. Box 32), Beyoglu, Istanbul.

UNION OF SOUTH AFRICA.

Cape Province ... Robb Motors Ltd., 102, Strand St., Cape Town, P.O. Box 1100.
Barnes Garage Ltd., P.O. Box 438, East London.
The Union Cycle Works, P.O. Box 442, Kimberley.
Sahds, P.O. Box 149, Queenstown.
Haigh Motors (Pty) Ltd., P.O. Box 1160, Port Elizabeth.

Natal ... ... W. Killerby (Natal) (Pty) Ltd., 281, Umbilo Road, Durban, Natal.
Percy Briggs (Pty.) Ltd., P.O. Box 564, Durban.
Jowett Bros., P.O. Box 201, Pietermaritzburg.

Orange Free State E. Hoehne & Co., P.O. Box 619, Bloemfoentein.

Transvaal ... Fisher & Simmons Ltd., 12, Albert Street, Johannesburg.
Shimwell Bros. (Pty) Ltd., P.O. Box 2035, Johannesburg, also at P.O. Box 95, Pretoria.

UNITED STATES OF AMERICA.

East Coast ... B.S.A. Incorporated, 639, Passaic Ave., Nutley 10, New Jersey.

West Coast ... Hap Alzina, 3074 Broadway, Oakland 11, California.

URUGUAY ... ... Linn & Cia. S.A., Casilla Correo 1027, Montevideo.

VENEZUELA ... Agencias B.S.A. de Venezuela C.A. Peligro a Pele el Ojo 24-2, Caracas.
"Casa del Motociclista," (Rafael E. Montero), Calle 89-E No. 3-A-52, Maracaibo, (Zulia and Falcon).

YEMEN .. ... Arabian Trading Co., Esplanade, Aden.

YUGOSLAVIA ... Gorma Ltd., 70, Pall Mall London S.W.1.

EVERY OWNER

OF A

B.S.A. MOTOR CYCLE

IS STRONGLY ADVISED

TO BUY ONLY

GENUINE BSA SPARES

WHEN REPLACEMENTS

BECOME NECESSARY

Engine

Gearbox

Clutch and Front Chaincase

Frame and Fittings

Rear Suspension

Front Fork and Fittings

Front Hub and Wheel Fittings

Rear Hub and Wheel Fittings

Petrol Tank Handlebar Dual Seat and Battery Carrier

Mudguards Oil Tank Toolbox Chainguards and Silencer

Petrol Tank Handlebar Battery Carrier and Dual Seat

Rear Mudguard Chainguards Rear Brake Rod Silencer

Prop Stand Mudguards Oil Tank Toolbox and Chainguard

Tools and Sundries

Legshields and Bumper Bars

Electrical Equipment

Numerical Index

ENGINE

C10L, C11G and C12

Plate Ref. Number.	Model.	Part No.	Description.	Number per set.
1	C10L, C11G, C12	66–1705	Engine sprocket alignment washer (.064")	*as reqd.*
2	C10L, C11G, C12	24–389	Engine sprocket alignment washer (.010")	*as reqd.*
3	C10L, C11G, C12	29–2027	Engine breather collar	1
4	C10L, C11G, C12	29–1970	Crankcase oil seal	1
5	C10L, C11G, C12	2–51	Crankcase stud nut	10
6	C10L	25–496	Crankcase and barrel stud	4
6	C11G, C12	25–496	Crankcase and barrel stud	6
7	C10L	2–2903	Crankcase and barrel stud washer (spring)	4
7	C11G, C12	2–2903	Crankcase and barrel stud washer (spring)	6
8	C10L	2–46	Crankcase and barrel stud nut	4
8	C11G, C12	2–46	Crankcase and barrel stud nut	6
9	C10L, C11G, C12	*29–1963	Crankcase complete with fixed fittings (drive side)	1
10	C10L, C11G, C12	65–438	Gudgeon pin retaining circlip	2
11	C10L, C11G, C12	65–437	Gudgeon pin	1
12	C10L, C11G, C12	29–776	Crankpin nut	2
13	C10L, C11G, C12	29–2196	Crankpin	1
14	C10L, C11G, C12	29–778	Crankpin roller	15
15	C10L	29–2561	Piston complete with rings, gudgeon pin and retaining circlips	1
16	C10L	65–443	Connecting rod complete	1
16	C11G, C12	29–2276	Connecting rod complete	1
17	C10L	65–730	Piston scraper ring	1
17	C11G, C12	29–2623	Piston scraper ring	1
18	C10L, C11G, C12	29–2620	Piston ring	2
19	C10L, C11G, C12	65–441	Gudgeon pin bush	1
20	C10L	27–6260	Cylinder head bolt (short)	3
21	C10L	29–2017	Cylinder head bolt washer (plain)	8
22	C10L	29–2335	Cylinder head (1954/5)	1
22	C10L	29–1939	Cylinder head (1956)	1
23	C10L	29–2039	Cylinder head gasket	1
24	C10L	29–2544	Cylinder barrel complete with fixed fittings (1954/5)	1
24	C10L	29–1934	Cylinder barrel with fixed fittings (1956)	1
25	C10L, C11G, C12	27–1366	Carburetter flange joint washer (Hallite)	1
26	C10L	15–1367	Carburetter flange stud	2
—	C10L	29–306	Carburetter (with air bell) (1955/6)	1
—	C10L	29–307	Carburetter (less air bell) (1955/6)	1
—	C11G	29–308	Carburetter (with air bell) (1955)	1
—	C11G, C12	29–309	Carburetter (less air bell) (1955/6)	1
—	C10L	19–2323	Carburetter (1954)	1
—	C11G	19–2322	Carburetter (1954)	1
27	C10L, C11G, C12	2–36	Crankpin key	1
28	C10L, C11G, C12	65–479	Crankpin grub screw	1
29	C10L, C11G, C12	2–49	Carburetter flange stud nut	2
30	C10L, C11G, C12	24–8784	Carburetter flange stud washer (spring)	2
31	C10L	24–8328	Cylinder head timing bolt	1
32	C10L, C11G, C12	66–102	Sparking plug washer	1
33	C10L	65–113	Sparking plug	1
33	C11G, C12	65–114	Sparking plug	1
34	C10L	27–5156	Cylinder head bolt (long)	4
34A	C10L	29–2033	Cylinder head and engine steady stay bolt	1
34B	C10L	2–923	Cylinder head and engine steady stay bolt washer	1
34C	C10L	2–49	Cylinder head and engine steady stay bolt nut	1
34D	C10L	29–2032	Engine steady stay	1
35	C10L	29–2120	Inlet valve	1
36	C10L, C11G	31–106	Valve spring	2
36	C11G, C12	31–106	Valve spring (outer)	2
37	C10L	29–2121	Exhaust valve	1
38	C10L	29–2110	Exhaust valve guide	1
39	C10L	66–221	Valve spring cup	2
40	C10L, C11G, C12	29–410	Valve spring split collar	4 halves
41	C10L	29–252	Tappet head adjuster	2
42	C10L	24–6040	Tappet head locknut	2
43	C10L	29–2180	Inlet and exhaust tappet	2
44	C10L	65–42	Inlet and exhaust tappet guide	2
45	C10L, C11G, C12	29–1994	Cam rocker spindle	1
46	C10L	29–2148	Inlet and exhaust cam rocker	2
47	C10L, C11G, C12	29–2171	Cam rocker spindle distance piece	1
48	C10L, C11G, C12	29–2170	Cam rocker spindle circlip	1
49	C10L, C11G, C12	29–2162	Camshaft pinion	1
50	C10L, C11G, C12	2–36	Camshaft pinion key	1
51	C10L	29–2075	Camshaft	1
51	C11G	29–2076	Camshaft (1955)	1
51	C12	29–2076	Camshaft (1956)	1

* C10L supplied only as crankcase complete (assembled) 2 halves 29–1961. C11G, C12 supplied only as crankcase complete (assembled) 2 halves 29–1973

ENGINE

C10L, C11G and C12

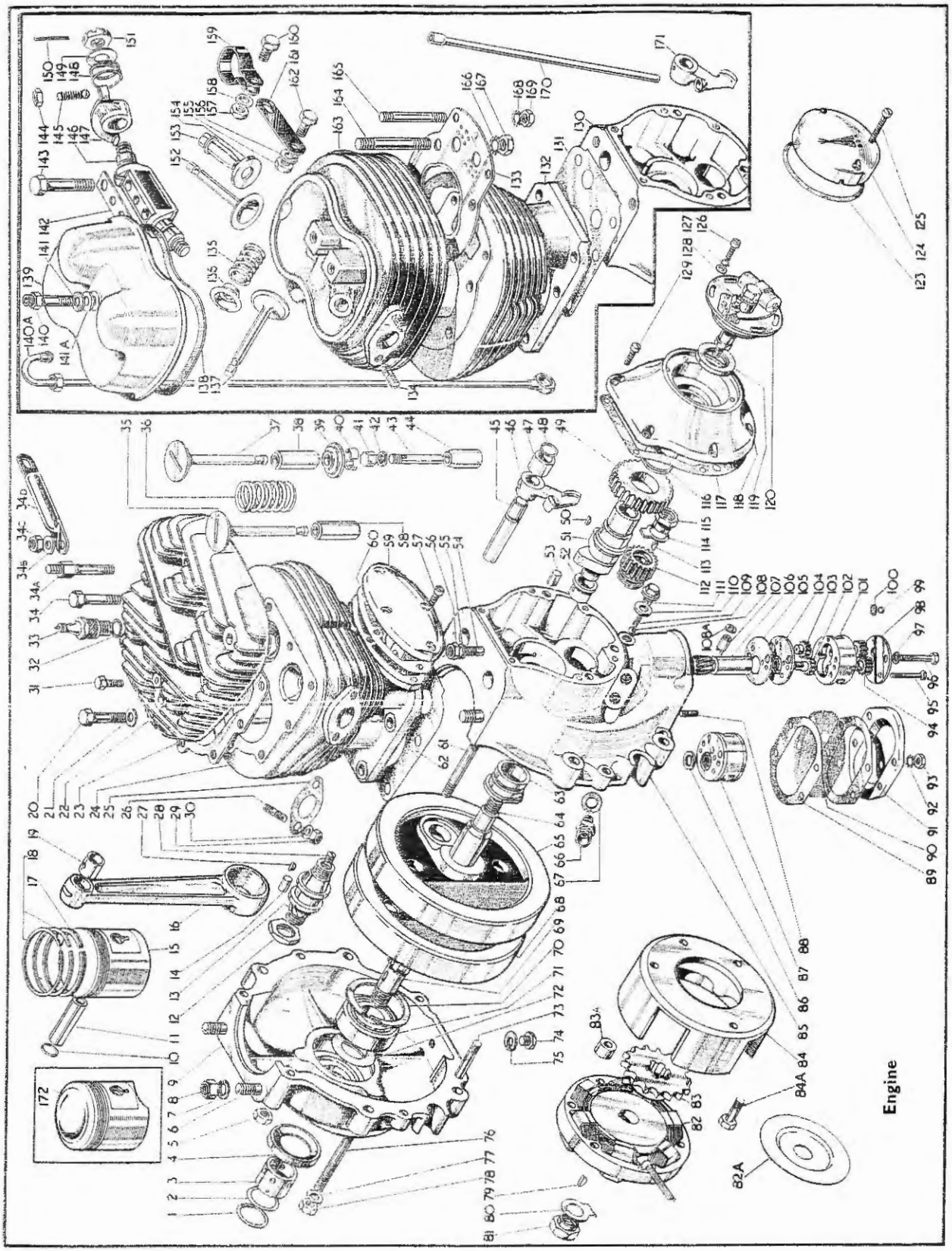

Engine
Gearbox
Clutch and Front Chaincase
Frame and Fittings
Rear Suspension
Front Fork and Fittings
Front Hub and Wheel Fittings
Rear Hub and Wheel Fittings
Petrol Tank Handlebar Dual Seat and Battery Carrier
Mudguards Oil Tank Toolbox Chainguards and Silencer
Petrol Tank Handlebar Battery Carrier and Dual Seat
Rear Mudguard Chainguards Rear Brake Rod Silencer
Prop Stand Mudguards Oil Tank Toolbox and Chainguard
Tools and Sundries
Legshields and Bumper Bars
Electrical Equipment
Numerical Index

ENGINE

C10L, C11G and C12

Plate Ref. Number.	Model.	Part No.	Description.	Number per set.
52	C10L, C11G, C12	29–2141	Camshaft crankcase bush	1
53	C10L, C11G, C12	27–1589	Timing cover dowel	2
54	C10L	29–565	Crankcase and barrel stud (front)	1
55	C10L	24–8784	Crankcase and barrel nut washer (spring)	1
56	C10L	15–6524	Crankcase and barrel stud nut (front)	1
57	C10L	66–1933	Tappet cover screw	4
58	C10L	29–2109	Inlet valve guide	1
59	C10L	29–2028	Tappet cover (1954/5)	1
59	C10L	29–1941	Tappet cover (1956)	1
60	C10L	29–2159	Tappet cover washer (paper) (1954/5)	1
60	C10L	29–1942	Tappet cover washer (1956)	1
61	C10L, C11G, C12	29–2332	Crankcase stud (top)	2
62	C10L	29–2111	Cylinder base washer	1
63	C10L, C11G	65–2052	Engine shaft bush (gear side)	1
64	C10L, C11G, C12	65–617	Engine shaft (gear side)	1
65	C10L, C11G, C12	65–554	Flywheel and shaft assembled (gear side)	1
66	C10L, C11G, C12	65–2252	Crankcase oil pipe adaptor	2
67	C10L, C11G, C12	66–1683	Crankcase oil pipe adaptor washer (fibre)	2
68	C10L, C11G, C12	29–1986	Flywheel and shaft assembled (drive side)	1
69	C10L, C11G, C12	29–1988	Engine shaft (drive side)	1
70	C10L, C11G, C12	66–1701	Crankcase bearing spring ring	1
71	C10L, C11G, C12	24–732	Crankcase bearing (drive side)	1
72	C10L, C11G, C12	24–2112	Crankcase bearing oil retaining washer (drive side)	2
73	C10L, C11G, C12	27–279	Crankcase stud (short)	4
74	C10L, C11G, C12	28–243	Crankcase drain plug	1
75	C10L, C11G, C12	2–4553	Crankcase drain plug washer (fibre)	1
76	C10L, C11G, C12	29–1971	Alternator stator fixing stud	4
77	C10L, C11G, C12	2–1462	Alternator stator fixing stud washer (spring)	6
78	C10L, C11G, C12	2–2395	Alternator stator fixing stud nut	6
79	C10L, C11G, C12	29–925	Alternator key	1
80	C10L, C11G	29–2024	Engine shaft lockwasher	1
81	C10L, C11G	29–2023	Engine shaft nut	1
81	C12	29–2053	Engine shaft nut	1
82	C10L	29–1975	Alternator (Wico Pacy) (1954/5)	1
82	C10L	29–1978	Alternator (Wico Pacy) (1956)	1
82	C11G	29–1974	Alternator (Lucas)	1
82	C12	29–1976	Alternator (Lucas)	1
82A	C10L, C11G, C12	29–2031	Alternator spinner	1
83	C10L	29–1999	Engine sprocket (16T)	1
83	C11G, C12	29–2034	Engine sprocket (17T)	1
84	C10L, C11G	29–1977	Alternator housing	1
85	C10L	*29–1966	Crankcase complete with fixed fittings (gear side)	1
86	C10L, C11G, C12	65–2606	Oil pump top plate washer	1
87	C10L, C11G	65–2619	Oil pump complete (1954/5)	1
87	C10L, C12	65–2589	Oil pump complete (1956)	1
88	C10L, C11G, C12	31–222	Crankcase scavenger cover stud	4
89	C10L, C11G, C12	65–2612	Crankcase scavenge cover washer	2
90	C10L, C11G, C12	65–2623	Oil pump filter	1
91	C10L, C11G, C12	65–2611	Crankcase scavenge cover	1
92	C10L, C11G, C12	2–1462	Crankcase scavenge cover washer (spring)	4
93	C10L, C11G, C12	2–51	Crankcase scavenge cover stud nut	4
94	C10L, C11G	†65–2599	Oil pump scavenge gear (1954/5)	2
94	C10L, C12	65–2590	Oil pump scavenge gear (1956)	2
95	C10L, C11G, C12	65–2604	Oil pump fixing bolt	2
96	C10L, C11G, C12	15–848	Oil pump bolt	2
97	C10L, C11G, C12	24–978	Oil pump fixing bolt washer (spring)	2
98	C10L, C11G, C12	65–2625	Oil pump bottom plate complete	1
99	C10L, C11G, C12	7/32″ dia.	Oil pump valve body ball	1
100	C10L, C11G, C12	65–2622	Oil pump valve body circlip	1
101	C10L, C11G, C12	65–2596	Oil pump body	1
102	C10L, C11G	†65–2601	Oil pump feed gear (driver) (1954/5)	1
102	C10L, C12	65–2592	Oil pump feed gear (driver) (1956)	1
103	C10L, C11G	†65–2600	Oil pump feed gear (driven) (1954/5)	1
103	C10L, C12	65–2591	Oil pump feed gear (driven) (1956)	1
104	C10L, C11G, C12	65–2598	Oil pump top plate	1
105	C10L, C11G, C12	65–2618	Oil pump and crankcase joint washer (fibre)	1
106	C10L, C11G, C12	65–2602	Oil pump driving spindle	1
107	C10L, C11G, C12	65–2603	Oil pump driving retaining pin	1
108	C10L, C11G, C12	3/16″ dia.	Crankcase oil valve ball	1
109	C10L, C11G, C12	66–1682	Crankcase oil valve spring	1

* C10L supplied only as crankcase complete (assembled) 2 halves 29-1961.
† 65–2599 replaced by 65-2590(2). 65–2600 replaced by 65–2591. 65–2601 replaced by 65–2592.
For replacement purposes these gears are only supplied in sets of four.

ENGINE

C10L, C11G and C12

Plate Ref. Number.	Model.	Part No.	Description.	Number per set.
110	C10L, C11G, C12	66–1683	Crankcase oil valve retaining screw washer (fibre)	1
111	C10L, C11G, C12	65–2188	Crankcase oil valve retaining screw	1
112	C10L, C11G, C12	29–2182	Engine shaft timing pinion	1
113	C10L, C11G, C12	15–40	Engine shaft timing pinion key	1
114	C10L, C11G, C12	15–1410	Engine shaft timing pinion locking washer	1
115	C10L, C11G, C12	65–691	Engine shaft timing pinion nut	1
116	C10L, C11G, C12	29–1995	Contact breaker casing bush	1
117	C10L, C11G, C12	29–1997	Contact breaker casing joint washer (paper)	1
118	C10L	29–1979	Contact breaker casing complete with fixed fittings	1
118	C11G, C12	29–1981	Contact breaker casing complete with fixed fittings	1
119	C10L, C11G, C12	29–1996	Camshaft oil seal	1
120	C10L	19–57	Contact breaker (Wico Pacy) (1954/5)	1
120	C11G	29–2071	Contact breaker (Lucas) (1954/5)	1
120	C12	29–2071	Contact breaker (Lucas) (1956)	1
120	C10L	29–2070	Contact breaker (Wico Pacy) (1956)	1
121	C10L, C11G, C12	27–3560	Contact breaker bolt washer (plain)	1
122	C10L, C11G, C12	29–1998	Contact breaker bolt	1
123	C10L, C11G, C12	29–1985	Contact breaker outer cover joint washer (paper)	1
124	C10L, C11G, C12	29–1972	Contact breaker casing outer cover	1
125	C10L, C11G, C12	29–1984	Contact breaker casing outer cover screw	2
126	C10L, C11G, C12	29–1983	Contact breaker screw	2
127	C10L, C11G, C12	29–3319	Contact breaker washer (shakeproof)	2
128	C10L, C11G, C12	2–1096	Contact breaker washer (plain)	2
129	C10L, C11G, C12	65–2158	Contact breaker casing screw	6
130	C11G, C12	*29–1969	Crankcase complete with fixed fittings (gear side)	1
131	C11G, C12	29–2262	Cylinder base washer (paper)	1
132	C11G, C12	29–1950	Cylinder barrel	1
133	C11G, C12	29–2265	Cylinder head gasket	1
134	C11G, C12	15–1367	Carburetter flange stud	2
135	C11G, C12	31–108	Valve spring (inner)	2
136	C11G, C12	31–111	Valve spring collar	2
137	C11G, C12	29–2124	Inlet valve	1
138	C11G, C12	29–2261	Valve rocker cover joint washer (Hallite)	1
139	C11G, C12	29–2029	Valve rocker cover	1
140	C11G	65–109	Valve rocker cover bolt (1954/5)	1
140	C12	29–2092	Valve rocker cover and oil feed bolt	1
140A	C12	29–2086	Rocker oil feed pipe complete	1
141	C11G, C12	2–4553	Valve rocker cover bolt washer (fibre)	1
141A	C12	2–537	Valve rocker cover bolt washer	1
142	C11G	29–2269	Valve rocker trunnion locking plate (1954/5)	2
142	C12	45–2454	Valve rocker trunnion locking plate	1
143	C11G, C12	29–2267	Valve rocker trunnion bolt	2
144	C11G, C12	24–563	Rocker adjusting screw nut	2
145	C11G, C12	29–2271	Rocker adjusting screw	2
146	C11G	29–2266	Valve rocker trunnion (1954/5)	1
146	C12	29–2091	Valve rocker trunnion	1
147	C11G, C12	29–2268	Inlet and exhaust valve rocker	2
148	C11G, C12	29–2270	Rocker fulcrum pin spring	2
149	C11G, C12	24–5914	Rocker trunnion washer	2
150	C11G, C12	35–698	Rocker trunnion nut split pin	2
151	C11G, C12	28–118	Rocker trunnion nut	2
152	C11G, C12	65–208	Exhaust valve	1
153	C11G, C12	65–37	Inlet and exhaust valve guides	2
154	C11G, C12	15–1215	Inlet and exhaust valve spring cup	2
155	C11G, C12	2–49	Cylinder head and engine steady strap bolt nut	1
156	C11G, C12	24–8784	Cylinder head and engine steady strap bolt washer	1
157	C10L, C11G, C12	2–49	Engine steady strap down tube clip bolt nut	1
158	C10L, C11G, C12	24–8784	Engine steady strap down tube clip bolt washer	1
159	C10L, C11G, C12	29–1208	Engine steady strap down tube clip	1
160	C10L, C11G, C12	24–6770	Engine steady strap down tube clip bolt	1
161	C11G, C12	29–2026	Engine steady strap	1
162	C11G, C12	27–6037	Cylinder head and engine steady strap bolt	1
163	C11G, C12	29–1954	Cylinder head with fixed fittings	1
164	C11G, C12	29–1956	Cylinder head stud	5
165	C11G, C12	29–1957	Cylinder head stud	2
166	C11G, C12	66–4707	Cylinder head stud washer	5
167	C11G, C12	2–46	Cylinder head stud nut	5
168	C11G, C12	36–382	Cylinder head stud washer	2
169	C11G, C12	2–49	Cylinder head stud nut	2

* C11G, C12 supplied only as crankcase complete (assembled) 2 halves 29–1973.

Plate 1—*continued.*

ENGINE

C10L, C11G and C12

Plate Ref. Number.	Model.	Part No.	Description.	Number per set.
170	C11G, C12	29–224	Valve push rod	2
171	C11G, C12	29–2285	Inlet and exhaust cam rocker	2
172	C11G, C12	29–2568	Piston complete with rings, gudgeon pin and circlips	1
—	C10L	29–1920	Exhaust pipe complete	1
—	C11G, C12	29–2995	Exhaust pipe complete	1
—	C11G Rigid	29–2971	Exhaust pipe (1954)	1

Plate 2

GEARBOX

C10L, C11G (three-speed).

Plate Ref. Number.	Model.	Part No.	Description.	Number per set.
1	C10L, C11G	27–4057	Gearbox sprocket locknut	1
2	C10L, C11G	27–4063	Gearbox sprocket locking washer	1
3	C10L	29–3783	Gearbox sprocket (19T)	1
3	C11G	29–3432	Gearbox sprocket (17T)	1
4	C10L, C11G	29–3254	Gearbox shell complete with fixed fittings	1
4	C10L, C11G	29–3255	Gearbox shell only	1
5	C10L, C11G	65–2603	Gear control shaft retaining pin	1
6	C10L, C11G	66–3250	Gear control shaft lockwasher	1
7	C10L, C11G	29–3243	Gear control shaft retaining plug pin	1
8	C10L, C11G	29–3286	Gear operating fork (layshaft) (low gear)	1
9	C10L, C11G	29–3284	Gear operating fork (mainshaft) (high gear)	1
10	C10L, C11G	29–3282	Gear control shaft	1
11	C10L, C11G	66–3291	Gear control shaft peg	2
12	C10L, C11G	29–3266	Gear control shaft bush (inner cover)	1
13	C10L, C11G	15–268	Gearbox mainshaft bush (inner cover)	1
14	C10L, C11G	29–3272	Gearbox mainshaft oil seal ring	1
15	C10L, C11G	29–3274	Gearbox mainshaft oil seal shim	1
16	C10L, C11G	27–4027	Gearbox mainshaft ballrace	1
17	C10L, C11G	27–4033	Gearbox oil retaining washer	1
18	C10L, C11G	29–3825	Gearbox pinion sleeve	1
19	C10L, C11G	29–3781	Gearbox mainshaft	1
21	C10L, C11G	27–4424	Gearbox mainshaft sliding pinion (27T)	1
22	C10L, C11G	27–4429	Gearbox mainshaft pinion (22T)	1
23	C10L, C11G	27–4093	Gearbox mainshaft split washer	1
24	C10L, C11G	27–4099	Gearbox mainshaft split washer retaining ring	1
25	C10L, C11G	27–4106	Gearbox kickstarter ratchet pinion	1
26	C10L, C11G	27–4112	Gearbox kickstarter ratchet	1
27	C10L, C11G	27–4447	Gearbox kickstarter ratchet spring	1
28	C10L, C11G	15–267	Gearbox kickstarter ratchet spring nut	1
29	C10L, C11G	29–3250	Gearbox operating lever spindle rubber	1
30	C10L, C11G	29–3412	Gear control operating lever	1
31	C10L, C11G	65–2162	Gearbox cover screw	3
32	C10L, C11G	2–525	Gear operating lever clamp bolt washer	1
33	C10L, C11G	65–3361	Gear operating pedal clamp bolt	1
34	C10L, C11G	65–3397	Kickstarter crank rubber	1
35	C11G	65–3381	Kickstarter crank (3-speed gearbox)	1
35	C10L	65–3381	Kickstarter crank	1
35	C11G Rigid	29–3244	Kickstarter crank (1954)	1
36	C10L, C11G	29–3312	Gearbox outer cover washer	1
37	C10L, C11G	29–3269	Footchange return spring stop	1
38	C10L, C11G	66–3415	Footchange operating plate and sleeve	1
39	C10L, C11G	29–3302	Footchange return spring	1
40	C10L, C11G	29–3404	Pawl carrier plate	1
41	C10L, C11G	29–3303	Pawl spring	1
42	C10L, C11G	29–3298	Gear control quadrant	1
43	C10L, C11G	29–3248	Gear operating spindle	1
44	C10L, C11G	29–3265	Gear operating spindle bush	1
45	C10L, C11G	29–3258	Gearbox inner cover complete with fixed fittings	1
46	C10L, C11G	29–3313	Gearbox inner cover washer	1
47	C10L, C11G	29–3260	Clutch push rod bush (mainshaft)	1
48	C10L, C11G	29–3475	Clutch push rod (three-speed)	1
49	C10L, C11G	2–1925	Layshaft nut	1

Plate 2

GEARBOX

C10L and C11G (3-speed)

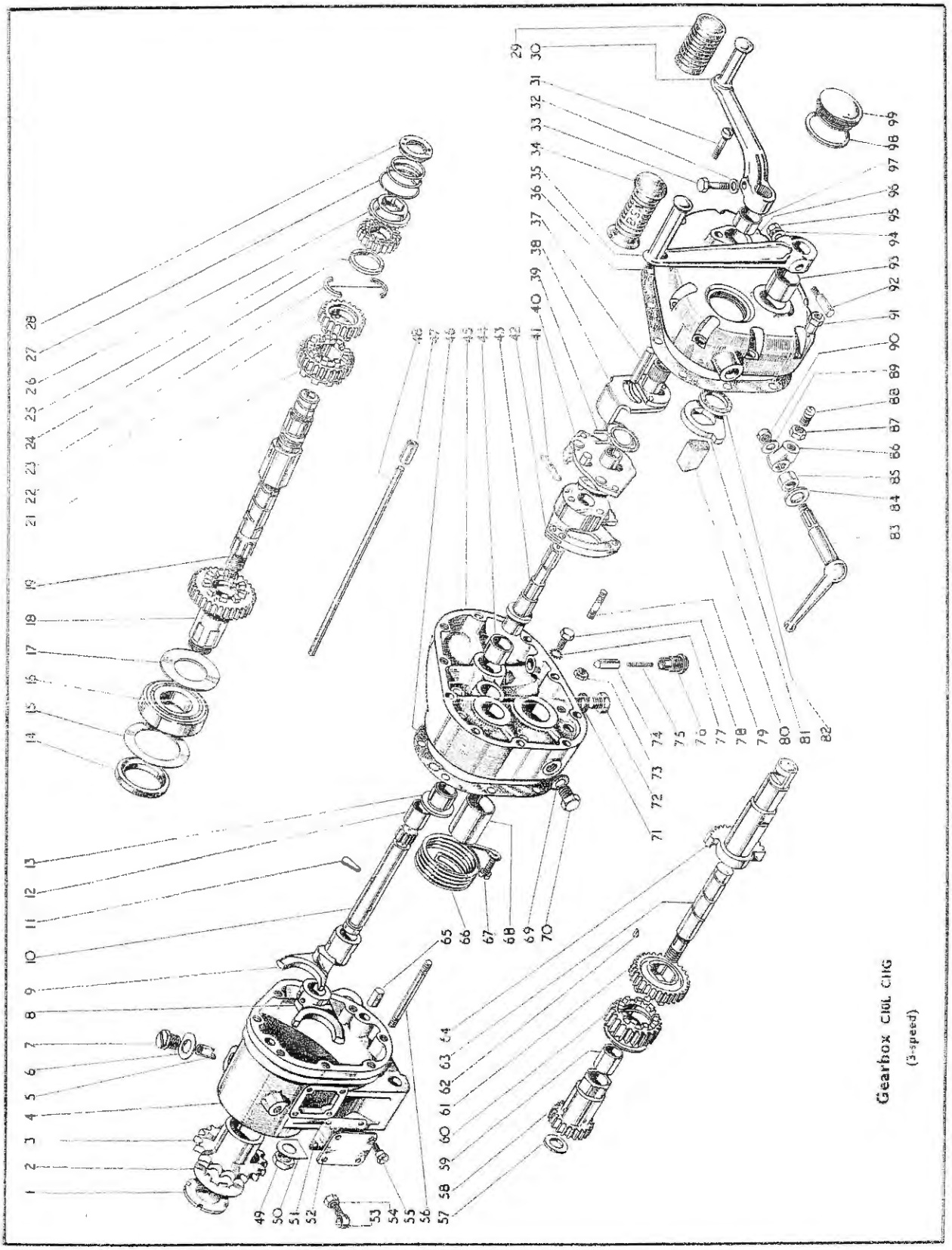

Gearbox
Clutch and Front Chaincase
Frame and Fittings
Rear Suspension
Front Fork and Fittings
Front Hub and Wheel Fittings
Rear Hub and Wheel Fittings
Petrol Tank Handlebar Dual Seat and Battery Carrier
Mudguards Oil Tank Toolbox Chainguards and Silencer
Petrol Tank Handlebar Battery Carrier and Dual Seat
Rear Mudguard Chainguards Rear Brake Rod Silencer
Prop Stand Mudguards Oil Tank Toolbox and Chainguard
Tools and Sundries
Legshields and Bumper Bars
Electrical Equipment
Numerical Index

Plate 2—*continued.*

GEARBOX

C10L and C11G (3-speed).

Plate Ref. Number.	Model.	Part No.	Description.	Number per set.
50	C10L, C11G	29–3289	Layshaft nut locking washer	1
51	C10L, C11G	29–3297	Gearbox inspection cover washer	1
52	C10L, C11G	29–3296	Gearbox inspection cover	1
53	C10L, C11G	27–1163	Clutch cable stop	1
54	C10L, C11G	2–443	Clutch cable stop locknut	1
55	C10L, C11G	27–4258	Gearbox inspection cover screw	4
56	C10L, C11G	29–3304	Gearbox cover stud (long)	5
57	C10L, C11G	27–4276	Layshaft thrust washer	1
58	C10L, C11G	29–3837	Layshaft pinion sleeve	1
59	C10L, C11G	27–4290	Layshaft sleeve bush	2
60	C10L, C11G	27–4436	Layshaft sliding pinion	1
61	C10L, C11G	27–4146	Layshaft pinion (30T)	1
62	C10L, C11G	27–347	Layshaft key	1
63	C10L, C11G	29–3288	Layshaft	1
64	C10L, C11G	29–3290	Kickstarter quadrant	1
65	C10L, C11G	27–1589	Gearbox inner cover dowel	2
66	C10L, C11G	29–3307	Kickstarter crank return spring	1
67	C10L, C11G	24–4214	Kickstarter spring anchor pin	1
68	C10L, C11G	29–3267	Kickstarter quadrant bush (inner cover)	1
69	C10L, C11G	2–4553	Gearbox oil level plug washer (fibre)	1
70	C10L, C11G	28–243	Gearbox oil level plug	1
71	C10L, C11G	2–4553	Gearbox drain plug washer (fibre)	1
72	C10L, C11G	28–243	Gearbox drain plug	1
73	C10L, C11G	2–53	Kickstarter spring anchor pin nut	1
74	C10L, C11G	15–4035	Gear control plunger	2
75	C10L, C11G	24–68	Gear control plunger spring	2
76	C10L, C11G	15–4040	Gear control plunger spring cup plug	1
77	C10L, C11G	29–541	Gearbox inner cover bolt washer (shakeproof)	3
78	C10L, C11G	21–2889	Gearbox inner cover bolt	3
79	C10L, C11G	65–2152	Gearbox inner cover stud	2
80	C10L, C11G	29–3308	Kickstarter return stop rubber	1
81	C10L, C11G	65–3296	Kickstarter return stop plate	2
82	C10L, C11G	65–3354	Kickstarter quadrant washer (cork)	1
83	C10L, C11G	29–3245	Clutch control lever	1
85	C10L, C11G	66–3256	Clutch operating spindle distance piece	1
86	C10L, C11G	66–3421	Clutch operating spindle lug complete with ball	1
87	C10L, C11G	2–2395	Clutch push rod thrust pin nut	1
88	C10L, C11G	29–3794	Clutch push rod thrust pin	1
89	C10L, C11G	31–424	Clutch operating spindle nut lockwasher	1
90	C10L, C11G	15–6524	Clutch operating spindle nut	1
91	C10L, C11G	29–3242	Gearbox cover stud nut	7
92	C10L, C11G	2–2579	Kickstarter crank cotter pin	1
93	C10L, C11G	29–3268	Kickstarter quadrant bush (outer cover)	1
94	C10L, C11G	15–5155	Kickstarter crank cotter pin washer	1
95	C10L, C11G	2–2578	Kickstarter crank cotter pin nut	1
96	C10L, C11G	29–3240	Gearbox outer cover with fixed fittings	1
97	C10L, C11G	29–3265	Gear operating spindle bush	1
98	C10L, C11G	67–42	Gearbox outer cover plug washer (leather)	1
99	C10L, C11G	65–3364	Gearbox outer cover plug	1
—	C10L, C11G	29–3183	Mainshaft packing washer	as reqd.
—	C10L, C11G	29–3184	Mainshaft packing washer	as reqd.
—	C10L, C11G	29–3287	Layshaft packing washer	as reqd.
—	C10L, C11G	29–3314	Footchange plate stop	2
—	C10L, C11G	2–498	Footchange plate stop screw	2
—	C10L, C11G	29–3319	Footchange plate stop washer	2

Plate 3

GEARBOX

C11G (4-speed).

Plate Ref. Number.	Model.	Part No.	Description.	Number per set.
1	C11G	67–3053	Gearbox sprocket nut	1
2	C11G	24–4263	Gearbox sprocket locking washer	1
3	C11G	29–3450	Gearbox sprocket (17T)	1
4	C11G	29–3444	Gearbox casing complete with fixed fittings	1

Plate 3

GEARBOX

C11G (4-speed)

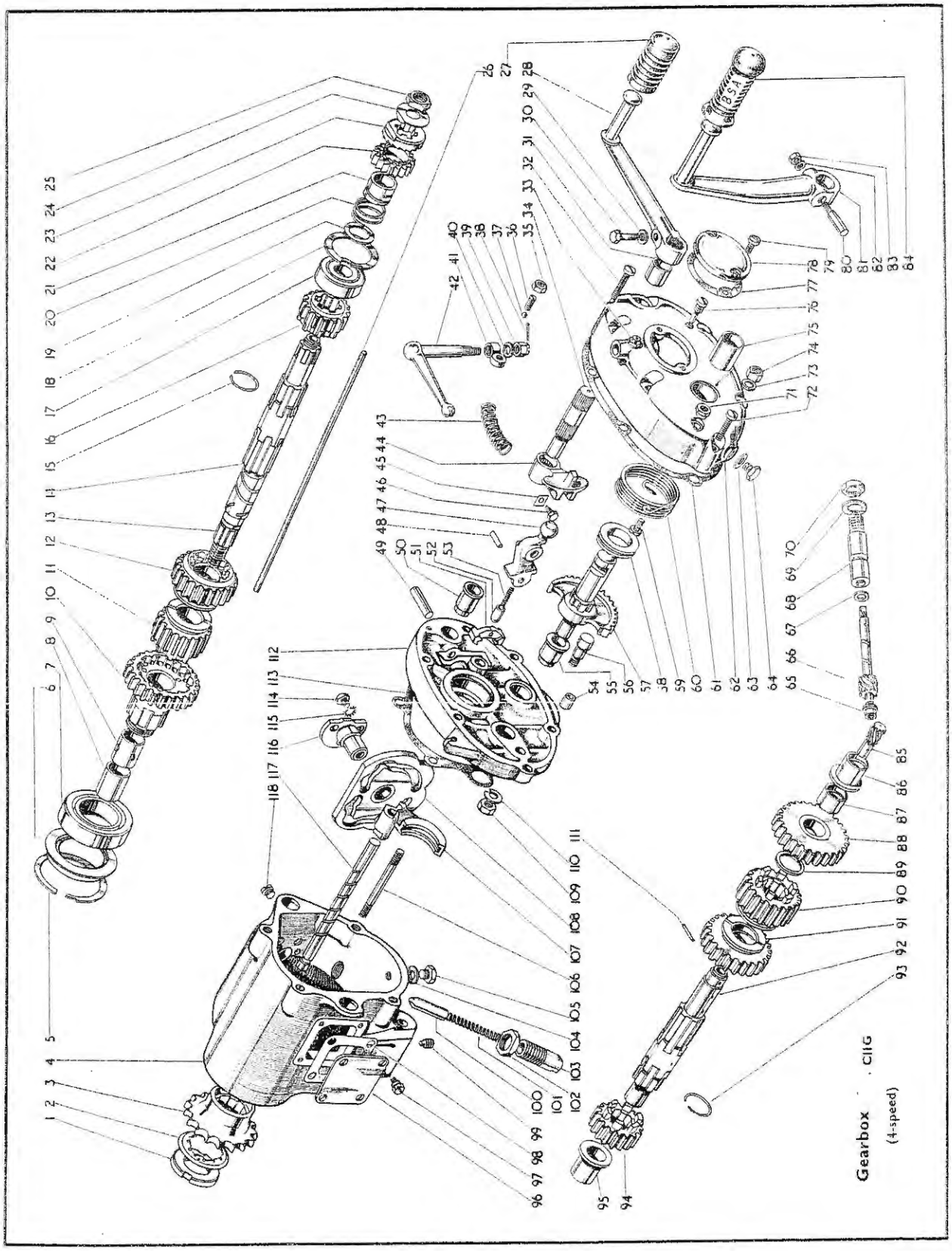

Clutch and Front Chaincase
Frame and Fittings
Rear Suspension
Front Fork and Fittings
Front Hub and Wheel Fittings
Rear Hub and Wheel Fittings
Petrol Tank Handlebar Dual Seat and Battery Carrier
Mudguards Oil Tank Toolbox Chainguards and Silencer
Petrol Tank Handlebar Battery Carrier and Dual Seat
Rear Mudguard Chainguards Rear Brake Rod Silencer
Prop Stand Mudguards Oil Tank Toolbox and Chainguard
Tools and Sundries
Legshields and Bumper Bars
Electrical Equipment
Numerical Index

Plate 3—*continued.*

GEARBOX

C11G (4-speed)

Plate Ref. Number.	Model.	Part No.	Description.	Number per set.
5	C11G	67–3026	Ball bearing spring ring	1
6	C11G	67–3067	Gearbox sprocket oil seal	1
7	C11G	24–4065	Constant mesh gear ball bearing	1
8	C11G	67–3073	Constant mesh gear bush	1
9	C11G	67–3073	Constant mesh gear bush (drilled)	1
10	C11G	67–3192	Constant mesh gear with bush (26T)	1
11	C11G	67–3201	Mainshaft sliding gear (20T)	1
12	C11G	67–3202	Mainshaft sliding gear (24T)	1
13	C11G	29–3784	Mainshaft with gear	1
14	C11G	29–3782	Gearbox mainshaft	1
15	C11G	67–3101	Mainshaft and layshaft gear locating ring	1
16	C11G	67–3191	Gearbox mainshaft gear (16T)	1
17	C11G	24–4217	Mainshaft bearing	1
18	C11G	67–3028	Mainshaft bearing spring ring	1
19	C11G	67–3161	Kickstarter ratchet pinion sleeve washer	1
20	C11G	67–3162	Kickstarter ratchet spring	1
21	C11G	67–3169	Kickstarter ratchet pinion bush	1
22	C11G	67–3168	Kickstarter ratchet pinion	1
23	C11G	67–3167	Kickstarter ratchet	1
24	C11G	67–3164	Kickstarter ratchet and mainshaft lockwasher	1
25	C11G	67–3163	Kickstarter ratchet and mainshaft nut	1
26	C11G	29–3477	Clutch push rod	1
27	C11G	29–3250	Foot operating lever rubber	1
28	C11G	65–3380	Gear change operating lever	1
29	C11G	2–525	Foot operating lever screw washer (plain)	1
30	C11G	65–3361	Selector lever foot operating screw	1
31	C11G	67–3140	Gearchange lever spindle bush	1
32	C11G	67–1706	Outer cover fixing screw (long)	2
33	C11G	28–2080	Outer cover grease nipple	1
34	C11G	67–3147	Selector lever spindle	1
35	C11G	3–720	Clutch push rod adjusting screw nut	1
36	C11G	65–3403	Clutch push rod adjusting screw	1
37	C11G	¼″ dia.	Clutch push rod adjusting screw ball	1
38	C11G	35–702	Clutch push rod lever nut split pin	1
39	C11G	15–1485	Clutch push rod lever nut	1
40	C11G	2–525	Clutch push rod lever washer (plain)	1
41	C11G	65–3360	Clutch push rod lever	1
42	C11G	67–3180	Clutch operating lever	1
43	C11G	67–3146	Selector lever return spring	2
44	C11G	67–3143	Selector lever	1
45	C11G	67–3145	Selector lever screw lockwasher	1
46	C11G	67–3144	Selector lever screw	1
—	C11G	67–3130	Gearchange selector arm complete	1
47	C11G	67–3131	Gearchange selector arm	1
48	C11G	67–3133	Gearchange selector arm claw pivot	1
49	C11G	67–3136	Gearchange selector arm pivot pin	1
50	C11G	67–3170	Footchange lever spindle bush	1
51	C11G	67–3132	Gearchange selector arm claw	1
52	C11G	67–3134	Gearchange selector arm plunger	1
53	C11G	67–3135	Gearchange selector arm plunger spring	1
54	C11G	66–3074	Dowel	2
55	C11G	67–3151	Kickstarter spindle bush	1
56	C11G	67–3152	Kickstarter quadrant stop	1
57	C11G	*67–3178	Kickstarter crank spindle assembly	1
58	C11G	67–3173	Kickstarter spindle sleeve	1
59	C11G	2–3718	Kickstarter spring screw	1
60	C11G	67–3174	Kickstarter spring	1
61	C11G	67–3032	Gearbox outer cover joint washer	1
62	C11G	67–3021	Gearbox outer cover with fixed fittings	1
63	C11G	2–4553	Oil level plug washer (fibre)	1
64	C11G	28–243	Oil level plug	1
65	C11G	65–3377	Speedometer gear bush	1
66	C11G	67–3175	Speedometer driven gear	1
67	C11G	65–3375	Speedometer driven gear thrust washer	1
68	C11G	65–3390	Speedometer driven gear bush	1
69	C11G	65–3392	Speedometer driven gear bush washer (fibre)	1
70	C11G	65–3391	Speedometer driven gear bush nut	1
71	C11G	27–4401	Kickstarter spring screw locknut	1
72	C11G	67–1705	Outer cover fixing screw (short)	1
73	C11G	2-923	Outer cover fixing nut washer (plain)	4

* Supplied as 67–3374 kickstart spindle and quadrant and 67–3376 kickstart ratchet pinion.

Plate 3—*continued.*

GEARBOX

C11G (4-speed)

Plate Ref. Number.	Model.	Part No.	Description.	Number per set.
74	C11G	67–3034	Outer cover fixing nut	4
75	C11G	67–3153	Kickstarter lever spindle bush	1
76	C11G	67–3176	Speedometer driven gear retaining pin	1
77	C11G	67–3033	Inspection cover joint washer (fibre)	1
78	C11G	67–3024	Inspection cover	1
79	C11G	24–7178	Inspection cover fixing screw	2
80	C11G	2–2579	Kickstarter crank cotter	1
81	C11G	29–3455	Kickstarter crank	1
82	C11G	15–5155	Kickstarter crank cotter washer (plain)	1
83	C11G	2–2578	Kickstarter crank cotter pin	1
84	C11G	65–3397	Kickstarter crank rubber	1
85	C11G	67–3088	Speedometer driving gear	1
86	C11G	67–3099	Layshaft bush	1
87	C11G	67–3093	Layshaft gear bush	1
88	C11G	67–3199	Layshaft gear complete with bush (27T)	1
89	C11G	67–3203	Layshaft thrust washer	1
90	C11G	67–3198	Layshaft sliding gear (19T)	1
91	C11G	67–3197	Layshaft sliding gear (23T)	1
91	C11G	67–3194	Layshaft complete with gears	1
92	C11G	67–3195	Layshaft	1
93	C11G	67–3101	Mainshaft and layshaft gear locating ring	1
94	C11G	67–3196	Layshaft gear (17T)	1
95	C11G	65–3337	Layshaft bush	1
96	C11G	29–3448	Gearbox inspection cover	1
97	C11G	27–4258	Gearbox inspection cover screw	4
98	C11G	29–3449	Gearbox inspection cover washer	1
99	C11G	67–3117	Gear shifter fork shaft grub screw	1
100	C11G	67–3119	Gear control cam plate plunger	1
101	C11G	67–3121	Gear control cam plate plunger spring	1
102	C11G	67–3122	Gear control cam plate plunger housing nut	1
103	C11G	67–3120	Gear control cam plate plunger housing	1
104	C11G	2–4553	Drain plug washer (fibre)	1
105	C11G	28–243	Drain plug	1
106	C11G	67–3023	Outer cover stud	4
107	C11G	67–3204	Gear shifter fork	2
108	C11G	67–3113	Gear control cam plate	1
109	C11G	2–49	Kickstarter quadrant stop nut	1
110	C11G	24–8784	Kickstarter quadrant stop washer (spring)	1
111	C11G	67–3128	Layshaft speedo driving gear ring	1
112	C11G	67–3017	Gearbox inner cover complete with fixed fittings	1
113	C11G	67–3031	Gearbox inner cover joint washer	1
114	C11G	21–5842	Selector cam plate bearing screw	3
115	C11G	29–541	Selector cam plate bearing screw washer (shakeproof)	3
116	C11G	29–3451	Selector cam plate bearing	1
117	C11G	67–3116	Gear shifter fork shaft	1
118	C11G	67–3027	Gearbox inspection hole plug	2

Plate 4

GEARBOX

C10L, C12 (Light 4-speed)

Plate Ref. Number.	Model.	Part No.	Description.	Number per set.
1	C10L, C12	29–3857	Pinion sleeve bearing	1
2	C10L, C12	29–3600	Pinion sleeve bush	1
3	C10L, C12	29–3598	Pinion sleeve with 27T pinion and bushes	1
4	C10L, C12	29–3608	Gearbox sprocket oil seal	1
5	C10L, C12	29–3588	Ball bearing spring ring	1
6	C10L, C12	29–3601	Pinion sleeve bush (drilled)	1
7	C10L, C12	29–3614	Mainshaft sliding gear (21T)	1
8	C10L, C12	29–3612	Gearbox mainshaft only	1
9	C10L, C12	29–3615	Mainshaft pinion (3rd gear)	1
10	C10L, C12	29–3584	Mainshaft gear locating circlip	1
11	C10L, C12	29–3613	Mainshaft gear (17T)	1
12	C10L, C12	90–11	Mainshaft bearing	1

Plate 4

GEARBOX

C10L, C12 (Light 4-speed)

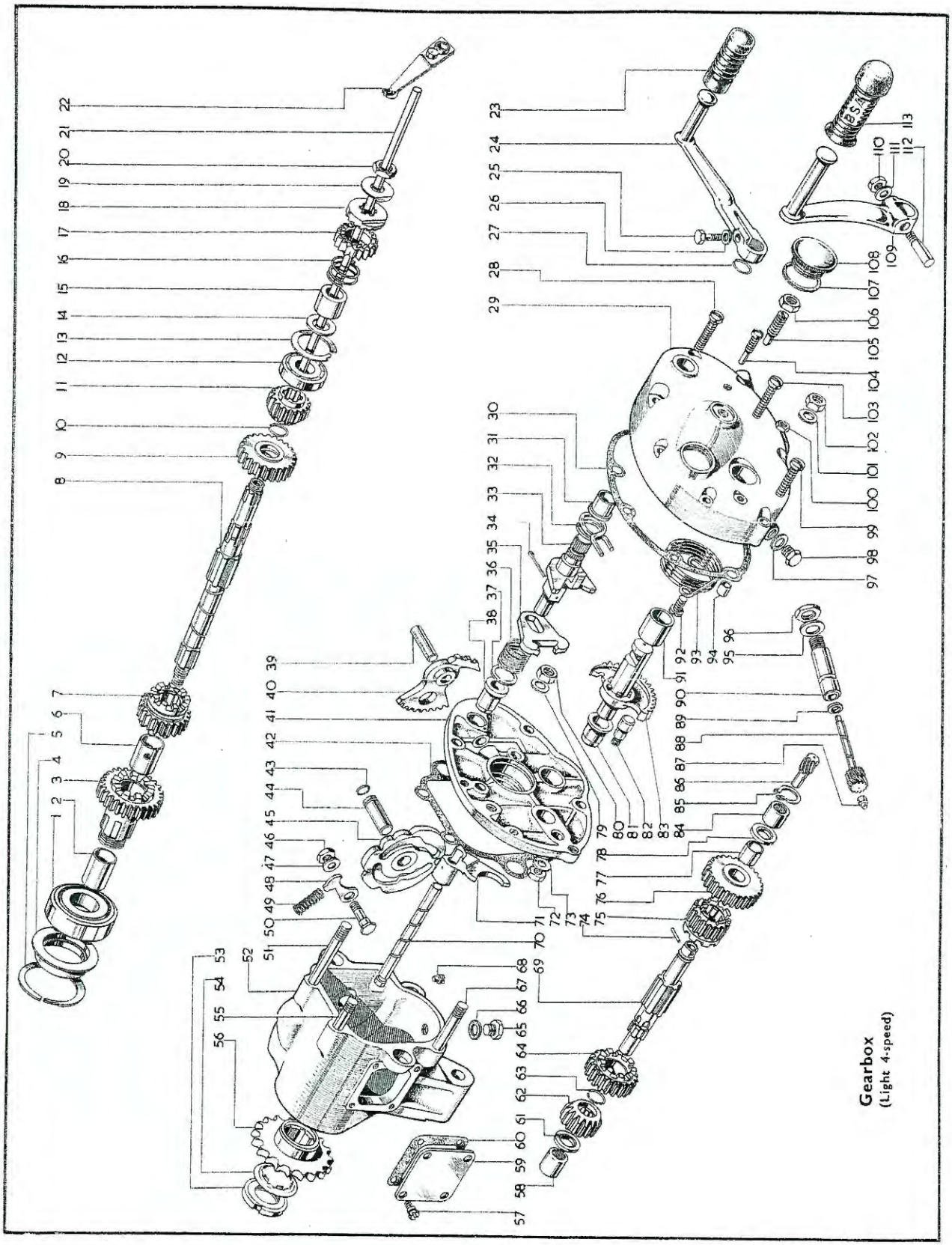

GEARBOX

C10L, C12 (Light 4-speed)

Plate Ref. Number.	Model.	Part No.	Description.	Number per set.
13	C10L, C12	29-3586	Mainshaft bearing spring ring	1
14	C10L, C12	3-1049	Kickstart ratchet pinion bush washer	1
15	C10L, C12	29-3637	Kickstart ratchet pinion bush	1
16	C10L, C12	67-3162	Kickstart ratchet pinion spring	1
17	C10L, C12	67-3376	Kickstart ratchet pinion	1
18	C10L, C12	29-3636	Kickstart ratchet	1
19	C10L, C12	29-3585	Kickstart ratchet and mainshaft nut lockwasher	1
20	C10L, C12	2-124	Kickstart ratchet and mainshaft nut	1
21	C10L, C12	29-3643	Clutch push rod	1
22	C10L, C12	29-3663	Clutch operating lever	1
23	C10L, C12	29-3250	Gearchange pedal rubber	1
24	C10L, C12	42-3010	Gearchange operating lever	1
25	C10L, C12	65-3361	Gearchange operating lever bolt	1
26	C10L, C12	2-525	Gearchange operating lever washer	1
27	C10L, C12	15-4240	Gearchange operating lever circlip	1
28	C10L, C12	65-3062	Outer cover fixing screw (long)	1
29	C10L, C12	29-3575	Gearbox outer cover with fixed fittings	1
30	C10L, C12	29-3577	Gearbox outer cover joint washer	1
31	C10L, C12	67-3353	Gearchange lever spindle bush (outer)	1
32	C10L, C12	67-3340	Footchange stop plate return spring	1
33	C10L, C12	67-3335	Selector spindle complete	1
34	C10L, C12	35-709	Gear selector plate split pin	1
35	C10L, C12	67-3341	Gear selector plate	1
36	C10L, C12	67-3342	Gear selector plate spring	1
37	C10L, C12	24-868	Gear selector plate spring thrust washer	1
38	C10L, C12	29-3632	Footchange lever spindle bush (inner)	1
39	C10L, C12	67-3350	Gearchange quadrant pivot pin	1
40	C10L, C12	29-3593	Gearchange quadrant complete	1
41	C10L, C12	29-3573	Gearbox inner cover with fixed fittings	1
42	C10L, C12	29-3633	Gearbox inner cover joint washer	1
43	C10L, C12	29-3607	Gear cam plate pivot pin locating ring	1
44	C10L, C12	29-3606	Gear cam plate pivot pin	1
45	C10L, C12	29-3589	Gear control cam plate complete	1
46	C10L, C12	1-6032	Cam plate selector hammer pivot bolt nut	1
47	C10L, C12	2-525	Cam plate selector hammer pivot bolt washer	1
48	C10L, C12	29-3591	Cam plate selector hammer	2
49	C10L, C12	29-3629	Cam plate selector hammer spring	1
50	C10L, C12	29-3630	Cam plate selector hammer pivot bolt	1
51	C10L, C12	29-3603	Outer cover stud (long)	2
52	C10L, C12	29-3571	Gearbox casing with fixed fittings	1
53	C10L, C12	29-3835	Gearbox sprocket nut	1
54	C10L, C12	29-3836	Gearbox sprocket lockring washer	1
55	C10L, C12	29-3605	Gear inner cover stud	1
56	C10L	29-3610	Gearbox sprocket (19T)	1
56	C12	29-3609	Gearbox sprocket (19T)	1
57	C10L, C12	27-4258	Gearbox inspection cover screw	4
58	C10L, C12	29-3579	Layshaft bearing	1
59	C10L, C12	29-3448	Gearbox inspection cover	1
60	C10L, C12	29-3449	Gearbox inspection cover washer	1
61	C10L, C12	29-3626	Layshaft thrust washer	1
62	C10L, C12	29-3618	Layshaft gear (16T)	1
63	C10L, C12	29-3584	Layshaft gear locating circlip	1
64	C10L, C12	29-3622	Layshaft 2nd gear pinion (22T)	1
65	C10L, C12	28-243	Gearbox drain plug	1
66	C10L, C12	2-4553	Gearbox drain plug washer (fibre)	1
67	C10L, C12	29-3604	Gearbox outer cover stud (short)	1
68	C10L, C12	67-3117	Gear shifter fork shaft grub screw	1
69	C10L, C12	29-3617	Layshaft	1
—	C10L, C12	29-3616	Layshaft complete with gears	1
70	C10L, C12	29-3627	Gear shifter fork shaft	1
71	C10L, C12	29-3628	Gear shifter fork	2
72	C10L, C12	2-49	Kickstarter quadrant stop nut	1
73	C10L, C12	24-8784	Kickstarter quadrant stop nut washer	1
74	C10L, C12	29-3620	Speedometer driving gear peg	1
75	C10L, C12	29-3621	Layshaft sliding gear (18T)	1
76	C10L, C12	29-3623	Layshaft 1st gear pinion with bush (26T)	1
77	C10L, C12	29-3625	Layshaft 1st gear pinion bush	1
78	C10L, C12	29-3626	Layshaft thrust washer	1
79	C10L, C12	15-5155	Inner cover fixing nut washer	1
80	C10L, C12	67-3034	Inner cover fixing nut	1
81	C10L, C12	29-3631	Kickstart spindle bush	1

Clutch and Front Chaincase
Frame and Fittings
Rear Suspension
Front Fork and Fittings
Front Hub and Wheel Fittings
Rear Hub and Wheel Fittings
Petrol Tank Handlebar Dual Seat and Battery Carrier
Mudguards Oil Tank Toolbox Chainguards and Silencer
Petrol Tank Handlebar Battery Carrier and Dual Seat
Rear Mudguard Chainguards Rear Brake Rod Silencer
Prop Stand Mudguards Oil Tank Toolbox and Chainguard
Tools and Sundries
Legshields and Bumper Bars
Electrical Equipment
Numerical Index

Plate 4—*continued*

GEARBOX

C10L, C12 (Light 4-speed)

Plate Ref. Number.	Model.	Part No.	Description.	Number per set.
82	C10L, C12	67-3152	Kickstart quadrant stop	1
83	C10L, C12	29-3634	Kickstart quadrant and spindle complete	1
84	C10L, C12	29-3578	Layshaft bearing	1
85	C10L, C12	29-3639	Layshaft bearing circlip	1
86	C10L, C12	29-3619	Speedometer driving gear (6T)	1
87	C10L, C12	29-3580	Speedometer gear thrust button	1
88	C10L, C12	29-3638	Speedometer driven gear (13T)	1
89	C10L, C12	65-3375	Speedometer driven gear thrust washer	1
90	C10L, C12	65-3390	Speedometer driven gear bush	1
91	C10L, C12	67-3153	Kickstart lever spindle bush	1
92	C10L, C12	27-4405	Kickstart spring screw	1
93	C10L, C12	67-3174	Kickstart spring	1
94	C10L, C12	66-3074	Gearbox outer cover dowel	2
95	C10L, C12	65-3392	Speedometer gear bush washer (fibre)	1
96	C10L, C12	65-3391	Speedometer gear bush nut	1
97	C10L, C12	2-4553	Oil level plug washer	1
98	C10L, C12	28-243	Oil level plug	1
99	C10L, C12	67-1705	Outer cover fixing screw (short)	1
100	C10L, C11	2-51	Kickstart spring screw locknut	1
101	C10L, C12	15-5155	Outer cover fixing nut washer (plain)	3
102	C10L, C12	67-3034	Outer cover fixing nut	3
103	C10L, C12	67-1706	Outer cover fixing screw (medium)	2
104	C10L, C12	67-3176	Speedometer gear retaining pin	1
105	C10L, C12	29-3641	Clutch operating lever pivot pin	1
106	C10L, C12	29-3642	Clutch operating lever pivot pin locknut	1
107	C10L, C12	67-42	Gearbox outer cover cap washer (fibre)	1
108	C10L, C12	65-3364	Gearbox outer cover cap	1
109	C10L, C12	65-3381	Kickstart crank	1
110	C10L, C12	2-2578	Kickstart crank cotter nut	1
111	C10L, C12	15-5155	Kickstart crank cotter pin nut washer	1
112	C10L, C12	2-2579	Kickstart crank cotter pin	1
113	C10L, C12	65-3397	Kickstart crank rubber	1

Plate 5

CLUTCH and FRONT CHAINCASE

C10L, C11G and C12

Plate Ref. Number.	Model.	Part No.	Description.	Number per set.
1	C10L, C11G, C12	67-3249	Clutch spring nut	3
2	C10L, C11G, C12	29-3469	Clutch spring	3
3	C10L, C11G, C12	29-3470	Clutch spring cup	3
4	C10L, C11G, C12	29-3467	Clutch spring plate complete	1
5	C10L, C11G, C12	66-7028	Clutch securing locknut	1
6	C10L, C11G, C12	15-431	Clutch securing locknut washer	1
7	C10L, C11G, C12	29-905	Clutch securing nut	1
8	C10L, C11G, C12	15-39	Clutch securing nut washer	1
9	C10L, C11G, C12	29-3476	Clutch driving plate with inserts	1
10	C10L, C11G, C12	67-3241	Clutch driven plate	1
11	C10L, C11G, C12	29-3476	Clutch driving plate with inserts	1
12	C10L, C11G, C12	67-3240	Clutch driven plate (rear)	1
13	C10L, C11G, C12	29-3464	Clutch centre	1
14	C10L, C11G, C12	29-3465	Vane for clutch centre	1
15	C10L, C11G, C12	29-1990	Cush drive rubber (small)	3
16	C10L, C11G, C12	29-1989	Cush drive rubber (large)	3
17	C10L, C11G, C12	29-3472	Clutch spring nut distance tube	3
18	C10L, C11G, C12	29-3466	Clutch centre end plate	1
19	C10L, C11G, C12	29-3471	Clutch spring bolt	3
20	C10L	24-8931	Transmission chain (front)	1
20	C11G, C12	24-8932	Transmission chain (front)	1
21	C10L, C11G, C12	29-3461	Clutch chainwheel complete	1
22	C10L, C11G, C12	26-650	Clutch ballrace roller	18
23	C10L, C11G, C12	29-8101	Chaincase joint washer (cork)	1
24	C10L, C11G, C12	29-3473	Clutch thrust washer	1
25	C10L, C11G, C12	29-3474	Clutch thrust washer abutment ring	1
26	C10L	29-8112	Chaincase back with sliding oil seal	1

Plate 5

CLUTCH and FRONT CHAINCASE

C10L, C11G and C12

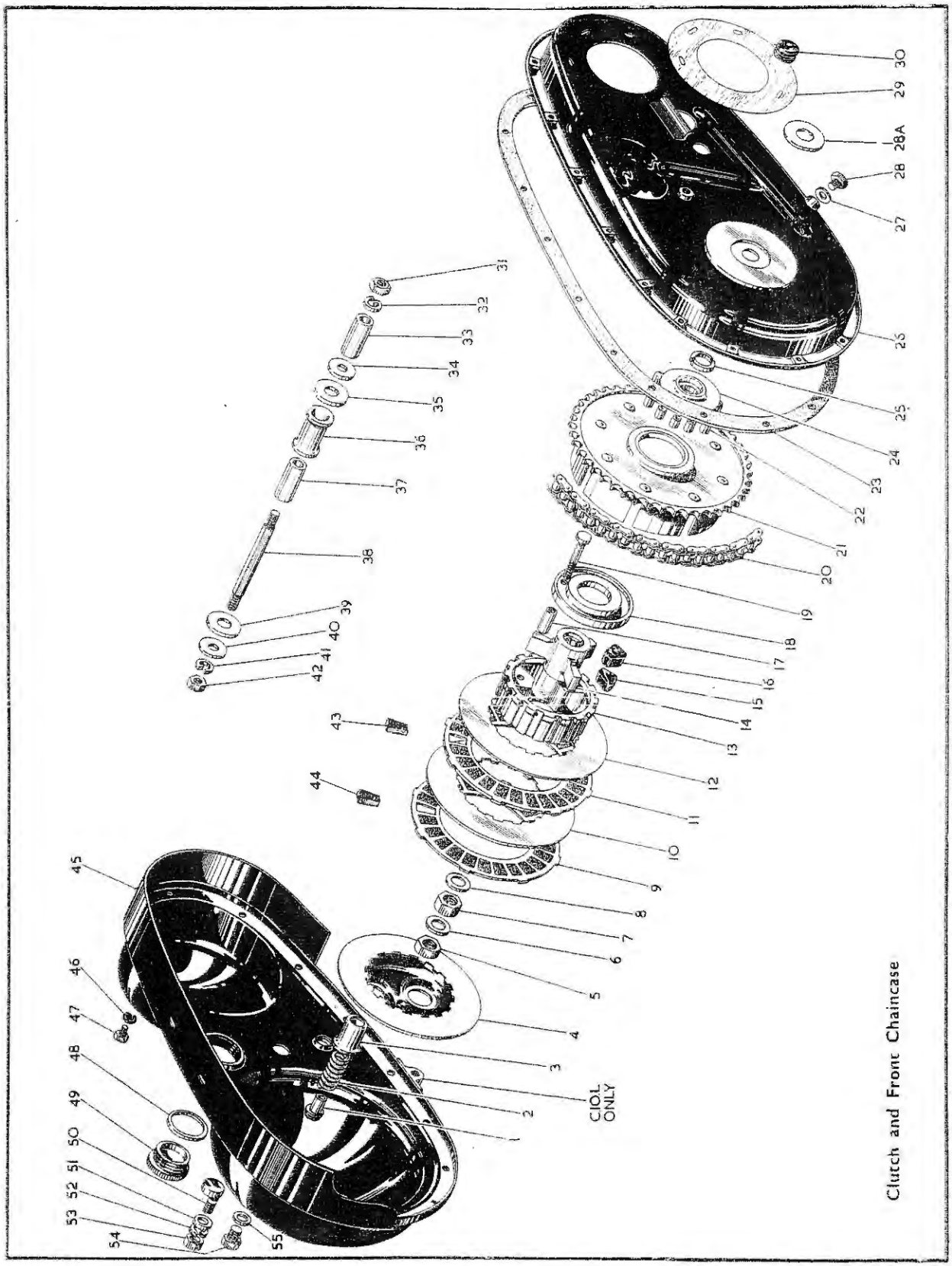

Clutch and Front Chaincase

Clutch and Front Chaincase

Frame and Fittings

Rear Suspension

Front Fork and Fittings

Front Hub and Wheel Fittings

Rear Hub and Wheel Fittings

Petrol Tank Handlebar Dual Seat and Battery Carrier

Mudguards Oil Tank Toolbox Chainguards and Silencer

Petrol Tank Handlebar Battery Carrier and Dual Seat

Rear Mudguard Chainguards Rear Brake Rod Silencer

Prop Stand Mudguards Oil Tank Toolbox and Chainguard

Tools and Sundries

Legshields and Bumper Bars

Electrical Equipment

Numerical Index

Plate 5—*continued.* CLUTCH and FRONT CHAINCASE

C10L, C11G and C12

Plate Ref. Number.	Model.	Part No.	Description.	Number per set.
26	C11G, C12	29–8102	Chaincase back with sliding oil seal	1
27	C10L, C11G, C12	66–7518	Oil drain plug washer	1
28	C10L, C11G, C12	15–645	Oil drain plug	1
28A	C10L, C11G, C12	29–8115	Chaincase oil seal washer	1
29	C10L, C11G, C12	29–8110	Chaincase and crankcase joint washer	1
30	C10L, C11G, C12	29–8111	Chaincase cable grommet	1
31	C10L	21–5103	Chaincase support stud nut	1
32	C10L	24–8784	Chaincase support stud washer (spring)	1
33	C10L	29–7531	Chaincase support stud distance tube	1
34	C10L	24–5909	Chaincase support washer (large)	1
35	C10L	66–4902	Chaincase distance sleeve washer	1
36	C10L	66–4903	Chaincase distance sleeve	1
37	C10L	29–7531	Chaincase support stud distance tube	1
38	C10L	29–8109	Chaincase support stud	1
39	C10L	66–4902	Chaincase distance sleeve washer	1
40	C10L	36–5344	Chaincase support stud washer (small)	1
41	C10L	24–8784	Chaincase support stud washer (spring)	1
42	C10L	21–5103	Chaincase support stud nut	1
43	C10L, C11G, C12	65–3827	Clutch driving plate inserts (cork)	24
44	C10L, C11G, C12	65–3827	Clutch driving plate inserts (cork)	24
45	C10L	29–8096	Chaincase front with fixed fittings	1
45	C11G	29–8099	Chaincase front with fixed fittings	1
45	C12	29–8120	Chaincase front with fixed fittings	1
46	C10L, C11G, C12	29–3319	Chaincase fixing screw washer (spring)	16
47	C10L, C11G, C12	1–4606	Chaincase front and back fixing screw	16
48	C10L, C11G, C12	67–42	Chaincase inspection cap washer	1
49	C10L, C11G, C12	65–3364	Chaincase inspection cap	1
50	C10L	29–7393	Rear brake pedal adjuster	1
51	C10L	2–2580	Rear brake adjuster washer (plain)	1
52	C10L	2–1462	Rear brake adjuster washer (spring)	1
53	C10L	21–5102	Rear brake adjuster nut	1
54	C10L, C11G, C12	66–7517	Oil level plug	1
55	C10L, C11G, C12	2–930	Oil level plug washer (fibre)	1

Plate 6 FRAME and FITTINGS

C10L (Spring Frame)

Plate Ref. Number.	Model.	Part No.	Description.	Number per set.
1	C10L	35–705	Central stand connecting link split pin	1
2	C10L	2–2138	Central stand connecting link washer	1
3	C10L	90–4721	Central stand complete	1
4	C10L	29–4887	Central stand spring	1
5	C10L	90–4716	Central stand connecting link	1
6	C10L	29–7574	Footrest rod locating plate	2
7	C10L	29–7578	Footrest rod	1
8	C10L	29–4886	Central stand sleeve	1
9	C10L	29–7550	Footrest bracket	2
10	C10L	29–7575	Footrest rubber	2
11	C10L	21–5105	Footrest rod nut	2
12	C10L	3–110	Footrest rod washer (spring)	2
13	C10L	24–5914	Footrest rod washer (plain)	2
14	C10L	29–5315	Gearbox connecting bolt nut	2
15	C10L	2–995	Gearbox connecting bolt washer (double spring)	2
16	C10L	65–4189	Gearbox connecting bolt washer (serrated)	2
17	C10L	29–4477	Crankcase cover distance nut	1
18	C10L	2–525	Crankcase cover screw washer	1
19	C10L	21–6172	Crankcase cover screw	1
20	C10L	24–8784	Front engine plate frame front stud washer (spring)	2
21	C10L	24–5160	Front engine plate frame front stud nut	2
22	C10L	2–440	Front engine plate frame bolt nut	1
23	C10L	2–1967	Front engine plate frame bolt washer (spring)	1
24	C10L	29–4454	Front engine plate	2
25	C10L	65–4465	Steering head ballrace cup	2

FRAME and FITTINGS

C10L (Spring Frame)

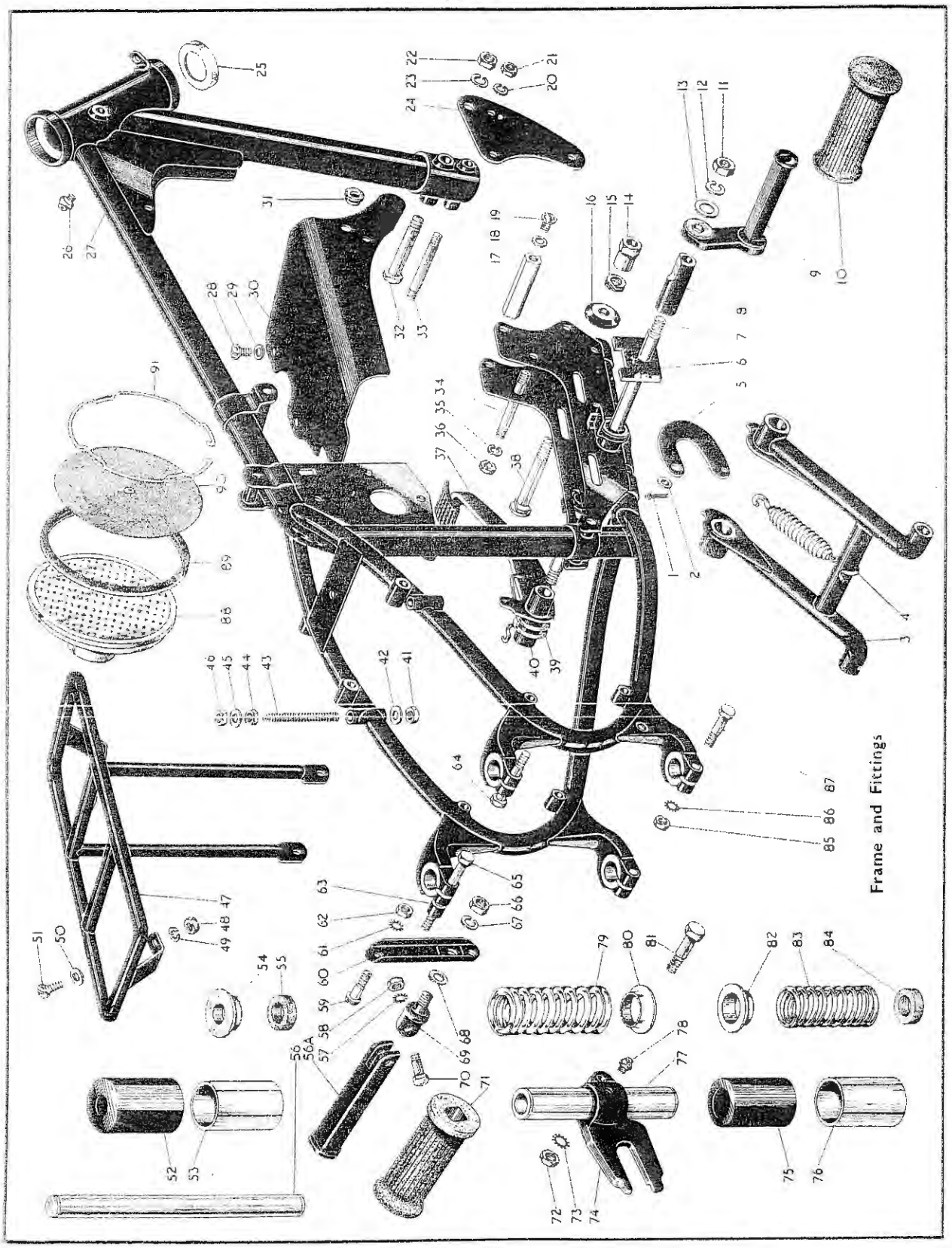

Frame and Fittings

Rear Suspension

Front Fork and Fittings

Front Hub and Wheel Fittings

Rear Hub and Wheel Fittings

Petrol Tank Handlebar Dual Seat and Battery Carrier

Mudguards Oil Tank Toolbox Chainguards and Silencer

Petrol Tank Handlebar Battery Carrier and Dual Seat

Rear Mudguard Chainguards Rear Brake Rod Silencer

Prop Stand Mudguards Oil Tank Toolbox and Chainguard

Tools and Sundries

Legshields and Bumper Bars

Electrical Equipment

Numerical Index

FRAME and FITTINGS

C10L (Spring Frame)

Plate Ref. Number.	Model.	Part No.	Description.	Number per set.
26	C10L	28–2080	Steering head grease nipple	1
27	C10L	29–4405	Frame complete (1954/5)	1
27	C10L	29–4580	Frame complete (1956)	1
28	C10L	21–6172	Crankcase cover screw	2
29	C10L	2-525	Crankcase cover screw washer	2
30	C10L	29–4461	Crankcase cover complete (1954/5)	1
30	C10L	29–4498	Crankcase cover complete	1
31	C10L	89–4283	Grommet for cables (crankcase cover)	1
32	C10L	29–4102	Front engine plate frame bolt	1
33	C10L	29–4481	Front engine plate frame front stud	1
34	C10L	29–4481	Crankcase and engine plate stud	4
35	C10L	24–8784	Crankcase and engine plate stud washer (spring)	8
36	C10L	24–5160	Crankcase and engine plate stud nut	7
37	C10L	29–7390	Rear brake pedal complete	1
38	C10L	29–4458	Gearbox connecting bolt	2
39	C10L	29–7392	Rear brake pedal return spring	1
40	C10L	90–4708	Central stand brake pedal pivot sleeve	1
41	C10L	2–49	Saddle rear fixing stud nut	2
42	C10L	2 923	Saddle rear fixing stud washer	2
43	C10L	66–4647	Saddle rear fixing stud	2
44	C10L	2–49	Saddle rear fixing stud nut	2
45	C10L	2–923	Saddle rear fixing stud washer	2
46	C10L	2–49	Saddle rear fixing stud nut	2
47	C10L	90–6818	Carrier complete	1
48	C10L	21–5102	Carrier fixing screw nut	2
49	C10L	2–1462	Carrier fixing screw washer (spring)	2
50	C10L	27–8560	Carrier fixing screw washer (plain)	2
51	C10L	21–6173	Carrier fixing screw	2
52	C10L	90–4111	Plunger spring shroud (outer)	2
53	C10L	90–4110	Plunger spring shroud (inner)	2
54	C10L	90–4115	Plunger spring collar (top)	2
55	C10L	90–4105	Plunger stop rubber buffer	2
56	C10L	90–4121	Plunger column complete	2
56A	C10L	29–7581	Pillion footrest	2
57	C10L	36–382	Pillion footrest swivel bolt washer (shakeproof)	2
58	C10L	24–6040	Pillion footrest swivel bolt nut	2
59	C10L	21-5667	Pillion footrest fixing bolt (nearside)	2
60	C10L	29–7576	Pillion footrest support complete	2
61	C10L	24–8784	Pillion footrest fixing bolt washer (shakeproof) (nearside)	2
62	C10L	21–5103	Pillion footrest fixing bolt nut (nearside)	2
63	C10L	66–8347	Plunger column top bolt distance piece (1954/5)	2
64	C10L	21–5672	Plunger column top bolt (offside)	1
65	C10L	21–5677	Plunger column top bolt (nearside)	1
66	C10L	2–46	Pillion footrest anchor bolt nut	2
67	C10L	2–522	Pillion footrest anchor bolt washer (spring)	2
68	C10L	24–5914	Pillion footrest anchor bolt washer (plain) (1954/5)	2
69	C10L	65–4917	Pillion footrest anchor bolt	2
70	C10L	29–7564	Pillion footrest swivel bolt	2
71	C10L	29–7583	Pillion footrest rubber	2
72	C10L	21–5104	Plunger to lug bolt nut	2
73	C10L	66–4707	Plunger to lug bolt washer (shakeproof)	2
74	C10L	90–6051	Rear hub mounting lug (offside)	1
74	C10L	90–6050	Rear hub mounting lug (nearside)	1
75	C10L	90–4120	Rebound spring shroud (outer)	2
76	C10L	90–4119	Rebound spring shroud (inner)	2
77	C10L	90–4113	Plunger with bushes	2
78	C10L	28–2080	Rear hub mounting lug grease nipple	2
79	C10L	90–4103	Plunger spring (top)	2
80	C10L	90–4112	Plunger spring collar (bottom)	2
81	C10L	21–5720	Bolt (plunger to lug)	2
82	C10L	90–4112	Rebound spring collar (top)	2
83	C10L	90–4104	Rebound spring (bottom)	2
84	C10L	90–4105	Plunger stop rubber buffer	2
85	C10L	21–5103	Plunger column bolt nut	4
86	C10L	36–382	Plunger column bolt washer (shakeproof)	4
87	C10L	21–5669	Plunger column bottom bolt	2
88	C10L	29–9299	Air cleaner	1
89	C10L	42–4593	Air cleaner sealing ring (rubber)	1
90	C10L	42–4591	Air cleaner element	1
91	C10L	42–4594	Air cleaner spring retaining clip	1

FRAME and FITTINGS

C11G (3 and 4-speed Gearbox).

Plate Ref. Number.	Model.	Part No.	Description.	Number per set.
1	C11G	29–7575	Footrest rubber (4-speed gearbox)	2
2	C11G	29–7571	Footrest bracket (offside) (4-speed gearbox)	1
3	C11G	27–8059	Footrest rod nut (4-speed gearbox)	2
4	C11G	3–110	Footrest rod washer (spring) (4-speed gearbox)	2
5	C11G	29–7530	Footrest rod distance tube (right-hand) (4-speed gearbox)	1
6	C11G	3–812	Rear engine plate bolt (seat tube) (4-speed gearbox)	1
7	C11G	15–431	Rear engine plate bolt washer (seat tube) (4-speed gearbox)	1
8	C11G	29–4075	Engine plate (front) (4-speed gearbox)	2
9	C11G	2–440	Front engine plate frame bolt nut (4-speed gearbox)	1
10	C11G	65–4465	Ball head cup	2
11	C11G	29–4488	Frame front (4-speed gearbox)	1
12	C11G	28–2080	Ball head grease nipple	1
13	C11G	24–6040	Front saddle fixing bolt nut	1
14	C11G	29–4465	Crankcase cover complete (4-speed gearbox)	1
15	C11G	29–4103	Front engine plate frame bolt (4-speed gearbox)	1
16	C11G	24–5160	Crankcase and engine plate stud nut (4-speed gearbox)	10
17	C11G	24–8734	Crankcase and engine plate stud washer (spring) (4-speed gearbox)	10
18	C11G	29–4100	Crankcase and engine plate stud (4-speed gearbox)	5
19	C11G	29–7504	Footrest rod distance tube (between engine plates) (4-speed gearbox)	1
20	C11G	29–7572	Footrest rod (4-speed gearbox)	1
21	C11G	15–541	Backstay frame bolt nut	1
22	C11G	15–716	Backstay frame bolt washer (spring)	1
23	C11G	28–2080	Front saddle fixing bolt grease nipple	1
24	C11G	33–4089	Front saddle fixing bolt	1
25	C11G	29–4376	Locating tube (backstay and seat lug)	1
26	C11G	15–431	Backstay frame bolt washer (plain)	1
27	C11G	29–4103	Backstay frame bolt	1
28	C11G	29–4379	Rear engine plate complete (offside) (3-speed gearbox)	1
29	C11G	29–4380	Rear engine plate (nearside) (3-speed gearbox)	1
30	C11G	2–49	Saddle rear fixing stud nut	4
31	C11G	2–923	Saddle rear fixing stud washer (plain)	4
32	C11G	67–4040	Saddle rear fixing stud	2
33	C11G	24–5160	Mudguard fixing bolt nut	2
34	C11G	35–33	Mudguard fixing bolt washer (spring)	2
35	C11G	15–7563	Horn distance piece	1
36	C11G	24–102	Horn and mudguard bolt (nearside)	1
37	C11G	29–7550	Footrest bracket (nearside) (4-speed gearbox)	1
38	C11G	29–4367	Chainstay and backstay complete (3 and 4-speed gearbox)	1
39	C11G	2–46	Pillion footrest anchor bolt nut	2
40	C11G	2–522	Pillion footrest anchor bolt washer (spring)	2
41	C11G	29–7564	Pillion footrest swivel bolt	2
42	C11G	67–4871	Pillion footrest anchor bolt	2
43	C11G	36–382	Pillion footrest swivel bolt washer (shakeproof)	2
44	C11G	24–6040	Pillion footrest swivel bolt nut	2
45	C11G	29–7581	Pillion footrest (1955)	2
45A	C11G Spring	29–7583	Pillion footrest rubber	2
46	C11G	65–4743	Prop stand lug complete	1
47	C11G	36–382	Prop stand clip bolt washer (shakeproof)	2
48	C11G	28–2338	Prop stand clip bolt	2
49	C11G	15–2018	Mudguard fixing bolt (offside)	1
50	C11G	29–7373	Rear brake pedal stop plate	1
51	C11G	29–7532	Footrest rod distance tube (left-hand) (4-speed gearbox)	1
52	C11G	15–4100	Front chaincase sealing washer (4-speed gearbox)	1
53	C11G	66–4902	Footrest cork washer (4-speed gearbox)	1
54	C11G	66–4903	Front chaincase distance sleeve (4-speed gearbox)	1
55	C11G	29–7531	Footrest rod distance tube (left-hand) (4-speed gearbox)	1
56	C11G	66–4902	Footrest cork washer (4-speed gearbox)	1
57	C11G	2–440	Rear engine plate bolt nut (seat tube) (4-speed gearbox)	1
58	C11G	15–716	Rear engine plate bolt washer (spring) (seat tube) (4-speed gearbox).	1
59	C11G	29–7545	Footrest rod distance tube (left-hand) (4-speed gearbox)	1
60	C11G	30–729	Front chaincase sealing washer (4-speed gearbox)	1
61	C11G	65–4540	Gearbox connecting bolt (4-speed gearbox)	2
62	C11G	15–5290	Bridge tube grease nipple	1
63	C11G	65–4189	Gearbox connecting stud washer (serrated) (4-speed gearbox)	2
64	C11G	29–4382	Rear engine plate complete (nearside) (4-speed gearbox)	1
65	C11G	29–4131	Chainstay central stand anchor lug	1
66	C11G	29–4378	Locating tube (chainstay and engine plate)	1
67	C11G	29–4381	Rear engine plate complete (offside) (4-speed gearbox)	1

Plate 7

FRAME and FITTINGS

CI1G (3 and 4-speed Gearbox)

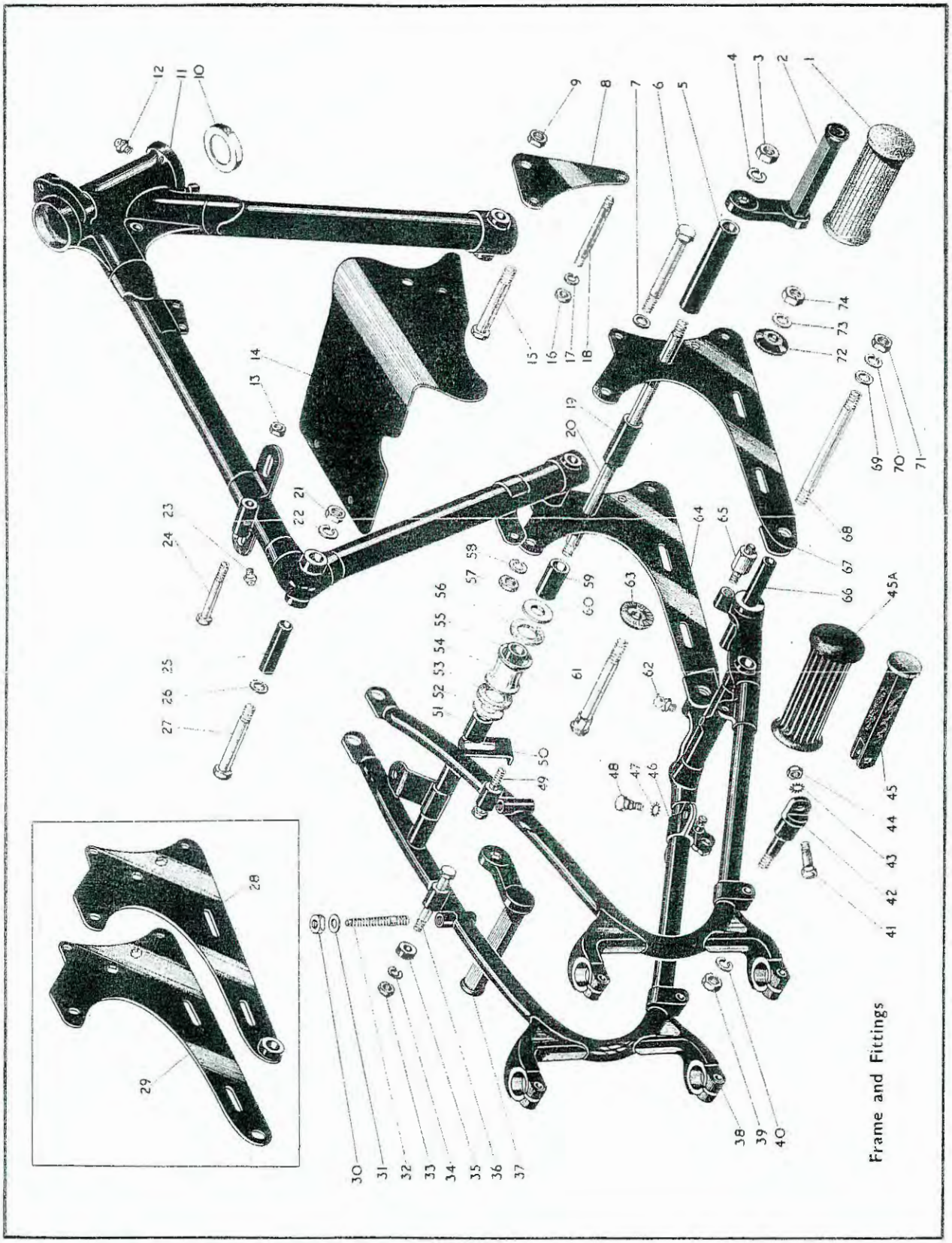

Plate 7 —*continued.*

FRAME and FITTINGS

C11G (3 and 4-speed Gearbox)

Plate Ref. Number.	Model.	Part No.	Description.	Number per set.
68	C11G	29–4290	Chainstay engine plate stud (4-speed gearbox)	1
69	C11G	15–431	Chainstay engine plate bolt washer (plain) (4-speed gearbox)	2
70	C11G	15–716	Chainstay engine plate bolt washer (spring) (4-speed gearbox)	2
71	C11G	2–1925	Chainstay engine plate bolt nut (4-speed gearbox)	2
72	C11G	65–4541	Gearbox connecting stud washer (serrated) (4-speed gearbox)	2
73	C11G	2–522	Gearbox connecting stud washer (spring) (4-speed gearbox)	2
74	C11G	29–5315	Gearbox connecting stud nut (4-speed gearbox)	2

Plate 8

FRAME and FITTINGS

C11G (Rigid and Spring) (3-speed Gearbox).

Plate Ref. Number.	Model.	Part No.	Description.	Number per set.
1	C11G Rigid and Spring	27–5683	Gearbox connecting stud	2
2	C11G Rigid and Spring	29–7575	Footrest rubber (3-speed gearbox)	2
3	C11G Rigid and Spring	29–7530	Footrest rod distance tube (right-hand) (3-speed gearbox)	1
4	C11G Rigid and Spring	29–7529	Footrest rod (right-hand) (3-speed gearbox)	1
5	C11G Rigid and Spring	27–8059	Footrest rod nut (3-speed gearbox)	4
6	C11G Rigid and Spring	3–110	Footrest rod washer (spring) (3-speed gearbox)	4
7	C11G Rigid and Spring	29–7549	Footrest bracket (offside) (3-speed gearbox)	1
8	C11G Rigid and Spring	2–525	Crankcase cover screw washer	1
9	C11G Rigid and Spring	21–6172	Crankcase cover screw	1
10	C11G Rigid and Spring	24–5160	Crankcase and engine plate stud nut	7
11	C11G Rigid and Spring	24–8784	Crankcase and engine plate stud washer (spring)	8
12	C11G Rigid and Spring	29–4075	Engine plate (front)	2
13	C11G Rigid and Spring	2–440	Front engine plate frame bolt nut	1
14	C11G Rigid and Spring	29–9291	Air cleaner adapter	1
15	C11G Rigid and Spring	29–9290	Air cleaner complete	1
16	C11G Rigid and Spring	65–4465	Ball head cup	2
17	C11G Spring	29–4486	Frame front (3-speed) (1955)	1
18	C11G Rigid and Spring	28–2080	Ball head grease nipple	1
19	C11G Rigid and Spring	24–6040	Front saddle fixing bolt nut	1
20	C11G Rigid and Spring	29–4463	Crankcase cover complete	1
21	C11G Rigid and Spring	89–4283	Crankcase cover cable grommet	1
22	C11G Rigid and Spring	29–4103	Front engine plate frame bolt	1
23	C11G Rigid and Spring	29–4100	Crankcase and engine plate stud	4
24	C11G Rigid and Spring	29–4477	Crankcase cover distance nut	1
25	C11G Rigid and Spring	29–4380	Engine plate (rear)	2
26	C11G Rigid and Spring	3–812	Rear engine plate bolt (seat tube)	1
27	C11G Rigid and Spring	15–431	Rear engine plate bolt washer (plain) (seat tube)	1
28	C11G Spring	15–716	Backstay frame bolt washer (spring)	1
29	C11G Rigid and Spring	15–541	Backstay frame bolt nut	1
30	C11G Rigid and Spring	2–525	Crankcase cover screw washer	2
31	C11G Rigid and Spring	21–6172	Crankcase cover screw	2
32	C11G Rigid and Spring	33–4089	Front saddle fixing bolt	1
33	C11G Rigid and Spring	28–2080	Front saddle fixing bolt grease nipple	1
34	C11G Rigid and Spring	29–4376	Locating tube (backstay and seat lug)	1
35	C11G Rigid and Spring	15–431	Backstay frame bolt washer (plain)	1
36	C11G Rigid	29–4102	Backstay frame bolt	1
36	C11G Spring	29–4103	Backstay frame bolt	1
37	C11G Rigid and Spring	15–7161	Carrier fixing screw	4
37	C11G Spring	24–225	Carrier fixing screw (1955)	4
38	C11G Rigid and Spring	2–1462	Carrier fixing screw washer (spring)	4
39	C11G Rigid and Spring	29–7025	Carrier complete	1
39	C11G Spring	65–6897	Carrier complete (1955)	1
—	C11G Spring	27–8560	Carrier fixing screw washer (1955)	4
—	C11G Spring	2–1462	Carrier fixing screw washer (spring) (1955)	4
—	C11G Spring	2–1374	Carrier packing washer (plain) (1955)	4
40	C11G Rigid and Spring	2–2395	Carrier fixing screw nut	4
41	C11G Rigid and Spring	2–46	Saddle rear fixing stud nut	4
42	C11G Rigid and Spring	2–923	Saddle rear fixing stud washer (plain)	4
43	C11G Rigid and Spring	67–4040	Saddle rear fixing stud	2
44	C11G Rigid and Spring	24–5160	Mudguard fixing bolt nut	2

FRAME and FITTINGS

C11G (Rigid and Spring) (3-speed Gearbox)

Plate Ref. Number.	Model.	Part No.	Description.	Number per set.
45	C11G Rigid and Spring	35–33	Mudguard fixing bolt washer (spring)	2
46	C11G Rigid	66–8347	Horn distance piecce (1954)	1
46	C11G Rigid and Spring	15–7563	Horn distance piece (nearside) (1955)	1
47	C11G Rigid and Spring	24–102	Horn and mudguard bolt (nearside)	1
48	C11G Rigid	29–4366	Backstay complete	1
49	C11G Rigid and Spring	29–7550	Footrest bracket (nearside) (3-speed gearbox)	1
49A	C11G Spring	29–7583	Pillion footrest rubber	2
50	C11G Rigid and Spring	29–7581	Pillion footrest	2
51	C11G Rigid and Spring	24–6040	Pillion footrest swivel bolt nut	2
52	C11G Rigid and Spring	36–382	Pillion footrest swivel bolt washer (shakeproof)	2
53	C11G Rigid and Spring	29–7564	Pillion footrest swivel bolt	2
54	C11G Rigid	29–7560	Pillion footrest anchor bolt (nearside)	1
55	C11G Rigid	2–1813	Chainstay, backstay, and mudguard stay connecting bolt nut	2
56	C11G Rigid	2–522	Chainstay, backstay and mudguard stay connecting bolt washer (spring)	2
57	C11G Rigid	2–1813	Chainstay, backstay and mudguard stay connecting bolt nut	2
58	C11G Rigid	2–803	Chainstay, backstay and mudguard stay connecting bolt	2
59	C11G Rigid and Spring	65–4734	Prop stand complete assembly with lug, bolt and spring	1
60	C11G Rigid and Spring	65–4741	Prop stand pivot pin	1
61	C11G Rigid and Spring	2–46	Pillion footrest anchor bolt nut	2
62	C11G Rigid and Spring	2–522	Pillion footrest anchor bolt washer (spring)	2
63	C11G Rigid	29–4365	Chainstay complete	1
64	C11G Rigid and Spring	28–2338	Prop stand lug clip bolt	2
65	C11G Rigid and Spring	36–382	Prop stand lug clip bolt washer (shakeproof)	2
66	C11G Rigid	65–4739	Prop stand lug complete	1
67	C11G Rigid and Spring	29–7363	Rear brake pedal complete	1
68	C11G Rigid and Spring	29–7327	Rear brake pedal return spring	1
69	C11G Rigid and Spring	29–7373	Rear brake pedal stop plate	1
70	C11G Rigid and Spring	65–292	Mudguard fixing bolt (offside)	1
71	C11G Rigid and Spring	29–7532	Footrest rod distance tube (left-hand) (3-speed gearbox)	1
72	C11G Rigid and Spring	15–4100	Front chaincase sealing washer (3-speed gearbox)	1
73	C11G Rigid and Spring	66–4902	Footrest cork washer (3-speed gearbox)	1
74	C11G Rigid and Spring	29–7531	Footrest rod distance tube (left-hand) (3-speed gearbox)	1
75	C11G Rigid and Spring	2–440	Rear engine plate bolt nut (seat tube)	1
76	C11G Rigid and Spring	15–716	Rear engine plate bolt washer (spring)	1
77	C11G Rigid and Spring	65–4189	Gearbox connecting stud washer (serrated) (3-speed gearbox)	4
78	C11G Rigid and Spring	66–4707	Gearbox connecting stud washer (shakeproof) (3-speed gearbox)	4
79	C11G Rigid and Spring	29–7504	Footrest rod distance tube (left-hand) (3-speed gearbox)	1
80	C11G Rigid and Spring	29–7545	Footrest rod distance tube (left-hand) (3-speed gearbox)	1
81	C11G Rigid and Spring	29–7544	Footrest rod (left-hand) (3-speed gearbox)	1
82	C11G Rigid and Spring	2–46	Gearbox connecting stud nut (3-speed gearbox)	4
83	C11G Rigid and Spring	29–4181	Chainstay central stand anchor lug	1
84	C11G Rigid and Spring	29–7362	Rear brake pedal operating lever	1
85	C11G Rigid and Spring	30–729	Front chaincase sealing washer (3-speed gearbox)	1
86	C11G Rigid and Spring	66–4902	Footrest cork washer (3-speed gearbox)	1
87	C11G Rigid and Spring	66–4903	Front chaincase distance sleeve (3-speed gearbox)	1
88	C11G Rigid and Spring	15–5290	Bridge tube grease nipple	1
89	C11G Spring	15–716	Chainstay engine plate bolt washer (spring)	2
90	C11G Rigid	2–1925	Chainstay engine plate bolt nut	1
90	C11G Spring	2–1925	Chainstay engine plate bolt nut	2
91	C11G Rigid and Spring	15–5290	Central stand grease nipple	1
92	C11G Rigid	2–803	Silencer and toolbox fixing bolt (when pillion footrest not fitted)	2
93	C11G Rigid and Spring	65–4742	Prop stand spring	1
94	C11G Rigid	29–7565	Pillion footrest anchor bolt distance piece (offside)	1
95	C11G Rigid	2–46	Silencer and toolbox fixing bolt nut (when pillion footrest not fitted.)	2
96	C11G Rigid	65–4894	Pillion footrest anchor bolt (offside)	1
97	C11G Rigid	65–4755	Central stand complete	1
97	C11G Spring	29–4880	Central stand complete	1
98	C11G Rigid and Spring	29–7388	Rear brake pedal shaft	1
99	C11G Rigid and Spring	65–4727	Central stand spring	1
100	C11G Rigid and Spring	2–1945	Rear brake pedal shaft washer (plain)	2
101	C11G Rigid and Spring	27–8059	Rear brake pedal shaft nut	2
102	C11G Rigid	29–4840	Central stand engine plate distance piece	1
102	C11G Spring	29–4387	Central stand engine plate distance piece	1
103	C11G Rigid	29–4377	Locating tube (chainstay and engine plate)	1
103	C11G Spring	29–4378	Locating tube (chainstay and engine plate)	1
104	C11G Spring	29–4290	Chainstay engine plate stand	1
105	C11G Rigid	15–431	Chainstay engine plate bolt washer	1
105	C11G Spring	15–431	Chainstay engine plate stud washer	2
106	C11G Rigid	29–4132	Chainstay engine plate bolt	1
107	C11G Rigid and Spring	19–5206	Air cleaner element washer (felt)	1
108	C11G Rigid and Spring	19–5202	Air cleaner element	1
109	C11G Rigid and Spring	19–5206	Air cleaner element washer (felt)	1

Plate 8

FRAME and FITTINGS

C11G (Rigid and Spring) (3-speed Gearbox)

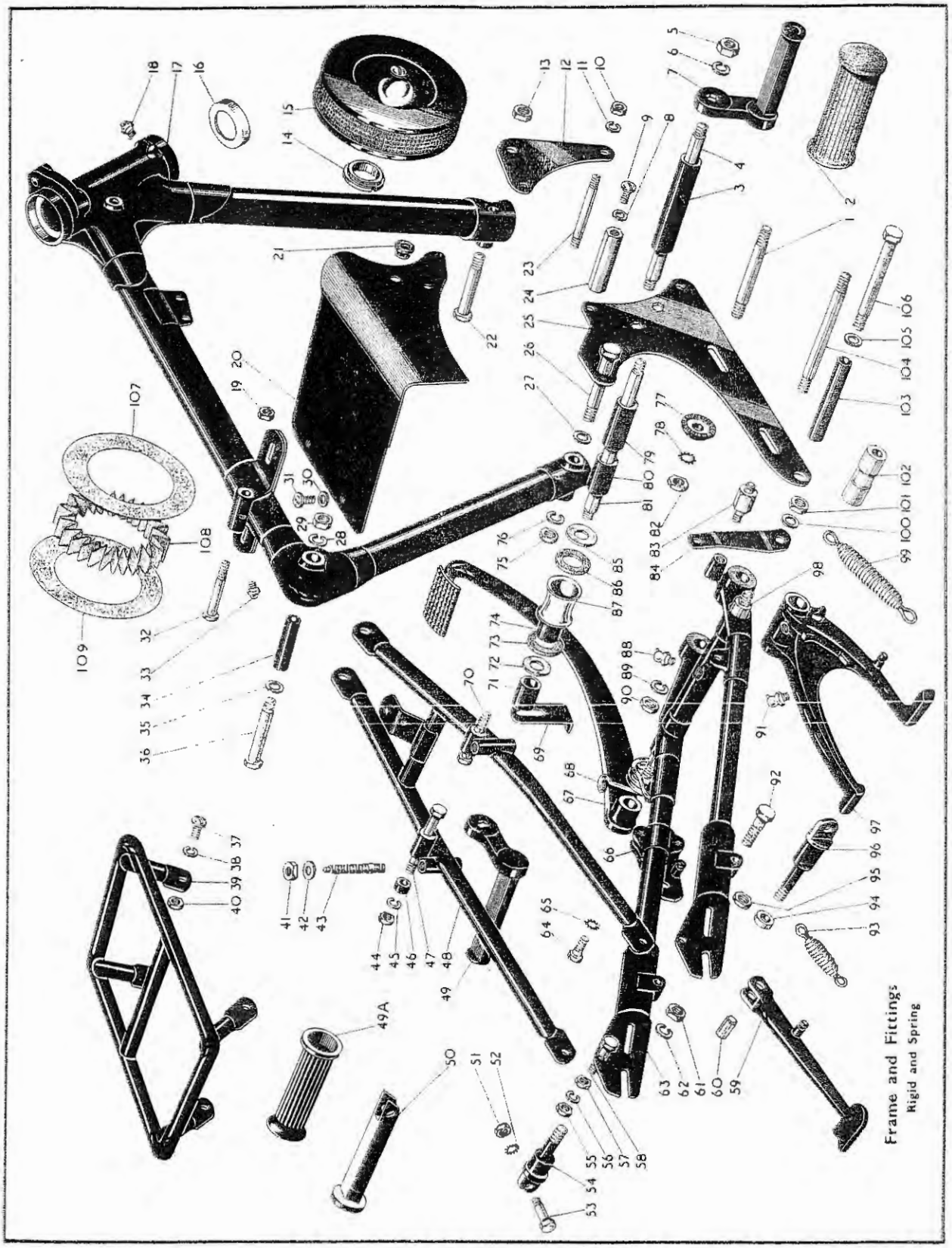

Rear Suspension
Front Fork and Fittings
Front Hub and Wheel Fittings
Rear Hub and Wheel Fittings
Petrol Tank Handlebar Dual Seat and Battery Carrier
Mudguards Oil Tank Toolbox Chainguards and Silencer
Petrol Tank Handlebar Battery Carrier and Dual Seat
Rear Mudguard Chainguards Rear Brake Rod Silencer
Prop Stand Mudguards Oil Tank Toolbox and Chainguard
Tools and Sundries
Legshields and Bumper Bars
Electrical Equipment
Numerical Index

Plate 9

FRAME and FITTINGS

C12 (Swinging Arm)

Plate Ref. Number.	Model.	Part No.	Description.	Number per set.
—	C12	29–4522	Frame complete with engine plates and central stand	1
1	C12	15–1312	Rear brake rod spring	1
2	C12	65–6274	Rear brake lever swivel pin	1
3	C12	29–7368	Rear brake adjuster nut	1
4	C12	29–7403	Rear brake pedal fulcrum thrust washer	1
5	C12	29–7327	Rear brake pedal return spring	1
6	C12	29–7400	Rear brake pedal complete	1
7	C12	2–2395	Rear brake rod spring nut	1
8	C12	2–46	Rear suspension pivot pin nut	2
9	C12	2–522	Rear suspension pivot pin washer (spring)	2
10	C12	2–1733	Rear suspension pivot pin washer (plain)	2
11	C12	90–4242	Rear suspension pivot pin washer (large)	2
12	C12	29–4549	Swinging arm complete with bushes and distance piece	1
13	C12	90–4250	Rear suspension damper complete (100 lbs./inch rate)	2
14	C12	21–5104	Rear suspension damper top fixing bolt nut	2
15	C12	2–522	Rear suspension damper top fixing washer (spring)	2
16	C12	2–1733	Rear suspension damper top fixing bolt washer (plain)	2
17	C12	21–5720	Rear suspension damper top fixing bolt	2
18	C12	65–6897	Carrier complete	1
19	C12	2–2395	Carrier fixing bolt nut	4
20	C12	2–1462	Carrier fixing bolt washer (spring)	4
21	C12	2–1374	Carrier packing washer	4
22	C12	27–8560	Carrier fixing bolt washer (plain)	4
23	C12	24–225	Carrier fixing bolt	4
24	C12	29–7571	Footrest bracket (offside)	1
25	C12	90–4232	Swinging arm fork spindle locknut	1
26	C12	30–729	Swinging arm fork spindle washer	1
27	C12	29–4181	Chainstay central stand anchor lug	1
28	C12	2–1934	Ignition switch and cover fixing bolt (bottom)	1
29	C12	29–7530	Footrest rod distance tube (right-hand)	1
30	C12	2–923	Ignition switch and cover bottom washer (plain)	1
31	C12	24–8784	Ignition switch and cover bottom washer (spring)	1
32	C12	2–49	Ignition switch and cover bottom nut	1
33	C12	29–4564	Swinging arm fork spindle complete	1
34	C12	65–4541	Gearbox connecting bolt washer (offside)	1
35	C12	2–2395	Rear brake pedal adjuster screw nut	1
36	C12	67–4801	Rear brake pedal adjuster screw	1
37	C12	2–522	Rear brake pedal fulcrum pin stud washer (spring)	1
38	C12	27–6276	Rear brake pedal fulcrum pin stud	1
39	C12	29–5315	Gearbox connecting bolt nut	2
40	C12	29–7572	Footrest rod	1
41	C12	29–7504	Footrest rod distance tube	1
42	C12	29–4103	Rear engine plate bolt (seat tube)	1
43	C12	29–4539	Rear sub frame complete	1
44	C12	24–5160	Crankcase and engine plate stud nut	10
45	C12	24–8784	Crankcase and engine plate stud washer (spring)	10
46	C12	29–4100	Crankcase and engine plate stud	5
47	C12	2–49	Saddle rear fixing stud nut	4
48	C12	2–923	Saddle rear fixing stud washer (plain)	4
49	C12	67–4040	Saddle rear fixing stud	2
50	C12	15–541	Backstay frame bolt nut	1
51	C12	15–716	Backstay frame bolt washer (spring)	1
52	C12	15–431	Backstay frame bolt washer (plain)	1
53	C12	2–1813	Saddle front fixing bolt nut	1
54	C12	67–4030	Saddle front fixing bolt	1
55	C12	28–2080	Saddle front support lug grease nipple	1
56	C12	29–4103	Backstay frame bolt (seat lug)	1
57	C12	29–4524	Frame front	1
—	C12	29–4688	Battery carrier complete	1
58	C12	29–4662	Battery carrier strap bolt saddle washer	1
59	C12	29–4661	Battery carrier strap bolt	1
60	C12	65–2353	Battery carrier swivel block (tapped)	1
61	C12	65–2352	Battery carrier swivel block (plain)	1
62	C12	29–4657	Battery carrier strap	1
63	C12	29–4689	Battery bracket	1
64	C12	29–4665	Battery locating strip complete	1
65	C12	29–4664	Battery carrier strap hinge pin	1
66	C12	2–46	Battery carrier front fixing bolt nut	1
67	C12	66–4707	Battery carrier front fixing bolt washer (shakeproof)	1
68	C12	65–5663	Battery carrier front fixing bolt	1
69	C12	2–440	Front engine plate frame bolt nut	1

FRAME and FITTINGS

G12 (Swinging Arm)

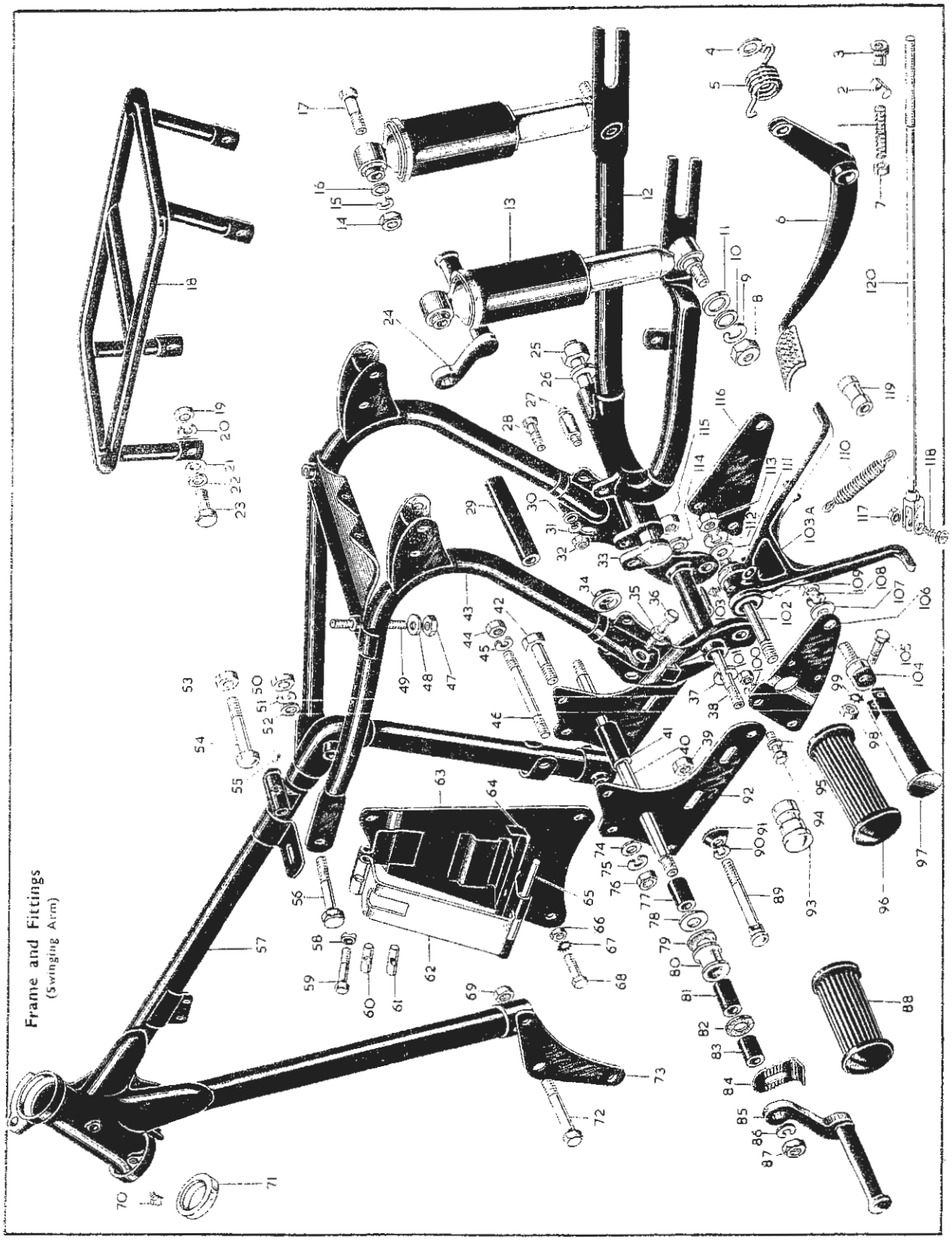

Rear Suspension
Front Fork and Fittings
Front Hub and Wheel Fittings
Rear Hub and Wheel Fittings
Petrol Tank Handlebar Dual Seat and Battery Carrier
Mudguards Oil Tank Toolbox Chainguards and Silencer
Petrol Tank Handlebar Battery Carrier and Dual Seat
Rear Mudguard Chainguards Rear Brake Rod Silencer
Prop Stand Mudguards Oil Tank Toolbox and Chainguard
Tools and Sundries
Legshields and Bumper Bars
Electrical Equipment
Numerical Index

Plate 9—*continued.* FRAME and FITTINGS

C12 (Swinging Arm)

Plate Ref. Number.	Model.	Part No.	Description.	Number per set.
70	C12	28–2080	Ball head grease nipple	1
71	C12	65–4465	Ball head cup	2
72	C12	29–4103	Front engine plate frame bolt	1
73	C12	29–4075	Engine plate (front)	2
74	C12	15–431	Chainstay engine plate and central stand washer (plain)	2
75	C12	15–716	Rear engine plate bolt washer (spring)	1
76	C12	2–440	Rear engine plate bolt nut	1
77	C12	29–7545	Footrest rod distance tube (left-hand)	1
78	C12	30–729	Front chaincase sealing washer	2
79	C12	66–4902	Footrest cork washer	1
80	C12	66–4903	Chaincase distance sleeve	1
81	C12	29–7531	Footrest rod distance tube (left-hand)	1
82	C12	66–4902	Footrest washer (cork)	1
83	C12	29–7532	Footrest rod distance tube (left-hand)	1
84	C12	29–7373	Footrest rod brake pedal stop plate	1
85	C12	29–7550	Footrest bracket (nearside)	1
86	C12	3–110	Footrest rod washer (spring)	2
87	C12	27–8059	Footrest rod nut	2
88	C12	29–7575	Footrest rubber	2
89	C12	29–4459	Gearbox connecting bolt	2
90	C12	2–522	Gearbox connecting bolt washer (spring)	2
91	C12	65–4189	Gearbox connecting bolt washer	2
92	C12	29–4559	Engine gearbox plate	2
93	C12	29–7402	Rear brake pedal fulcrum pin	1
94	C12	2–1934	Pillion footrest bracket bolt	4
95	C12	2–923	Pillion footrest bracket bolt washer (plain)	4
96	C12	29–7583	Pillion footrest rubber	2
97	C12	29–7581	Pillion footrest	2
98	C12	24–6040	Pillion footrest swivel bolt nut	2
99	C12	36–382	Pillion footrest swivel bolt washer (shakeproof)	2
100	C12	24–8784	Pillion footrest bracket bolt washer (spring)	4
101	C12	2–49	Pillion footrest bracket bolt nut	4
—	C12	29–7580	Pillion footrest assembled with anchor and swivel bolts, nuts, washers and footrest rubbers.	1
102	C12	66–4175	Chainstay engine plate and central stand stud	1
103	C12	28–2080	Central stand grease nipple	1
103A	C12	29–4882	Central stand complete	1
104	C12	65–4917	Pillion footrest anchor bolt	2
105	C12	29–7564	Pillion footrest swivel bolt	2
106	C12	29–4560	Pillion footrest bracket (nearside)	1
107	C12	24–5914	Pillion footrest anchor bolt washer plain (nearside)	1
108	C12	2–2903	Pillion footrest anchor bolt washer (spring)	2
109	C12	2–46	Pillion footrest anchor bolt nut	2
110	C12	65–4727	Central stand spring	1
111	C12	15–431	Chainstay engine plate and central stand stud nut washer	2
112	C12	15–716	Chainstay engine plate and central stand stud washer (spring)	2
113	C12	2–1925	Chainstay engine plate and central stand stud nut	2
114	C12	2–1733	Brake pedal fulcrum pin bolt washer (plain)	1
115	C12	2–46	Rear brake pedal fulcrum pin stud nut	1
116	C12	29–4561	Pillion footrest and silencer bracket	1
117	C12	2–443	Rear brake rod toggle end nut	1
118	C12	2–510	Rear brake rod toggle end screw	1
119	C12	29–4568	Central stand engine plate distance piece	1
120	C12	29–7365	Rear brake rod complete	1

Plate 10 REAR SUSPENSION

C11G (3 and 4-speed).

Plate Ref. Number.	Model.	Part No.	Description.	Number per set.
1	C11G	90–4112	Rebound spring top collar	2
2	C11G	2–46	Rear wheel mounting lug bolt nut	2
3	C11G	66–4707	Rear wheel mounting lug bolt washer (shakeproof)	2
4	C11G	90–4112	Plunger spring bottom collar	2
5	C11G	29–4326	Plunger spring (top)	2
6	C11G	90–4105	Plunger stop buffer (rubber)	2

Plate 10

REAR SUSPENSION

C11G (3 and 4-speed)

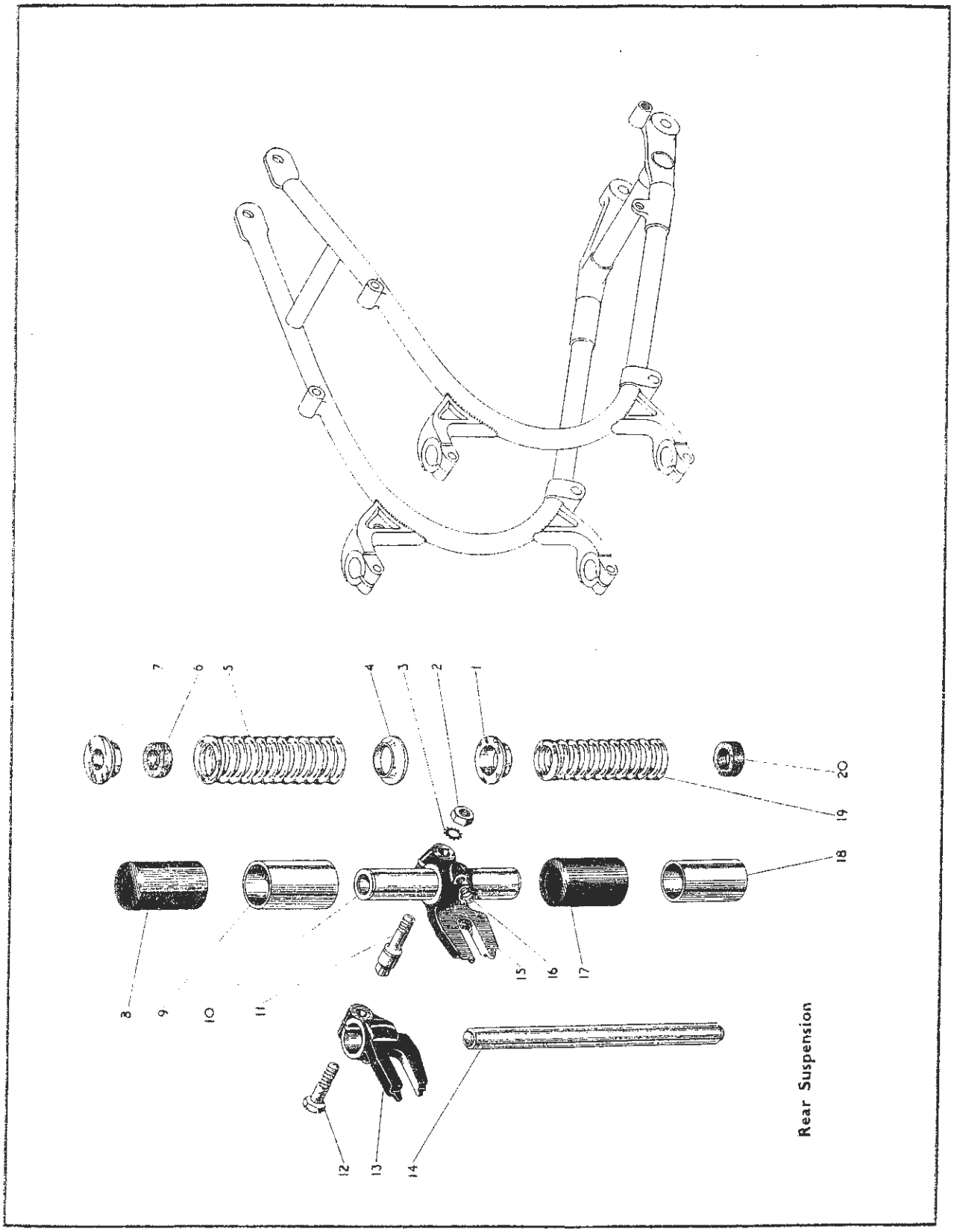

Rear Suspension
Front Fork and Fittings
Front Hub and Wheel Fittings
Rear Hub and Wheel Fittings
Petrol Tank Handlebar Dual Seat and Battery Carrier
Mudguards Oil Tank Toolbox Chainguards and Silencer
Petrol Tank Handlebar Battery Carrier and Dual Seat
Rear Mudguard Chainguards Rear Brake Rod Silencer
Prop Stand Mudguards Oil Tank Toolbox and Chainguard
Tools and Sundries
Legshields and Bumper Bars
Electrical Equipment
Numerical Index

Plate 10—*continued*

REAR SUSPENSION

C11G (Spring Frame) (3 and 4-speed)

Plate Ref. Number.	Model	Part No.	Description.	Number per set.
7	C11G	90–4115	Plunger spring top collar	2
8	C11G	90–4111	Plunger spring outer shroud	2
9	C11G	90–4110	Plunger spring inner shroud	2
10	C11G	90–4113	Plunger tube assembly	2
11	C11G	29–4327	Mounting lug and rear brake anchor plate bolt (offside)	1
12	C11G	3–1399	Mounting lug bolt (nearside)	1
13	C11G	29–6223	Rear hub mounting lug (nearside)	1
14	C11G	90–4121	Plunger column	2
15	C11G	29–6221	Rear hub mounting lug (offside)	1
16	C11G	28–2080	Lug grease nipple	2
17	C11G	90–4120	Rebound spring outer shroud	2
18	C11G	90–4119	Rebound spring inner shroud	2
19	C11G	29–4330	Rebound spring (bottom)	2
20	C11G	90–4105	Plunger stop buffer (rubber)	2

Plate 11

FRONT FORK and FITTINGS

C10L. 1954/5

Plate Ref. Number.	Model.	Part No.	Description.	Number per set.
—	C10L	29–5116	Front fork and fittings assembled	1
1	C10L	90–5109	Front fork sliding tube complete (right-hand)	1
2	C10L	90–5069	Front fork tube bush	2
3	C10L	90–5068	Front fork tube bush distance tube	2
4	C10L	90–5110	Front fork sliding tube complete (left-hand)	1
5	C10L	90–5069	Front fork tube bush	2
6	C10L	90–5079	Front fork shock absorber rubber	2
7	C10L	90–5078	Front fork spring	2
8	C10L	90–5031	Front fork spring scroll	2
9	C10L	66–4707	Front fork spring scroll nut lockwasher	2
10	C10L	21–5104	Front fork spring scroll nut	2
11	C10L	29–5291	Cap for steering stem adjusting sleeve	1
12	C10L	29–5290	Steering stem adjusting sleeve	1
13	C10L	65–5321	Steering head dust cap	1
14	C10L	65–5319	Steering head ballrace cone (top)	1
15	C10L	3/16″	Steering head balls	24
16	C10L	3/16″	Steering head balls	24
17	C10L	65–5320	Steering head ballrace cone (bottom)	1
18	C10L	29–5138	Front fork bottom yoke complete	1
19	C10L	36–7926	Front fork bottom yoke clamp bolt	2
20	C10L	29–5134	Headlamp mounting bracket distance rubber	2
21	C10L	29–5132	Headlamp mounting complete	1
22	C10L	67–302	Handlebar securing cap stud nut	4
23	C10L	29–5134	Headlamp mounting bracket distance rubber	2
24	C10L	29–5137	Front fork top yoke	1
25	C10L	21–5513	Front fork top yoke clamp bolt	1
26	C10L	90–5028	Fork outer tube top nut washer	2
27	C10L	29–5143	Fork outer tube top nut	2
28	C10L	29–5144	Fork outer tube nut cap	2
29	C10L	29–5120	Handlebar securing cap with studs	1
30	C10L	2–2138	Front fork top yoke clamp bolt nut washer	1
31	C10L	21–5104	Front fork spring scroll nut	1
32	C10L	36–382	Handlebar securing cap stud lockwasher	4
33	C10L	42–9009	Handlebar mounting bracket cable grommet	2
34	C10L	67–6851	Headlamp beading rubber extrusion	1
35	C10L	29–5140	Fork outer tube complete	2
36	C10L	90–5096	Front fork tube bottom nut retaining clip	2
37	C10L	29–541	Front fork tube grease nipple lockwasher	2
38	C10L	28–2080	Front fork tube grease nipple	2
39	C10L	90–5067	Front fork tube bottom nut	2
40	C10L	90–5044	Front fork tube oil seal	2
41	C10L	90–5081	Front fork tube gaiter	2
—	C10L	29–5146	Headlamp mounting bracket distance sleeve	2

FRONT FORK and FITTINGS

G10L 1954/5

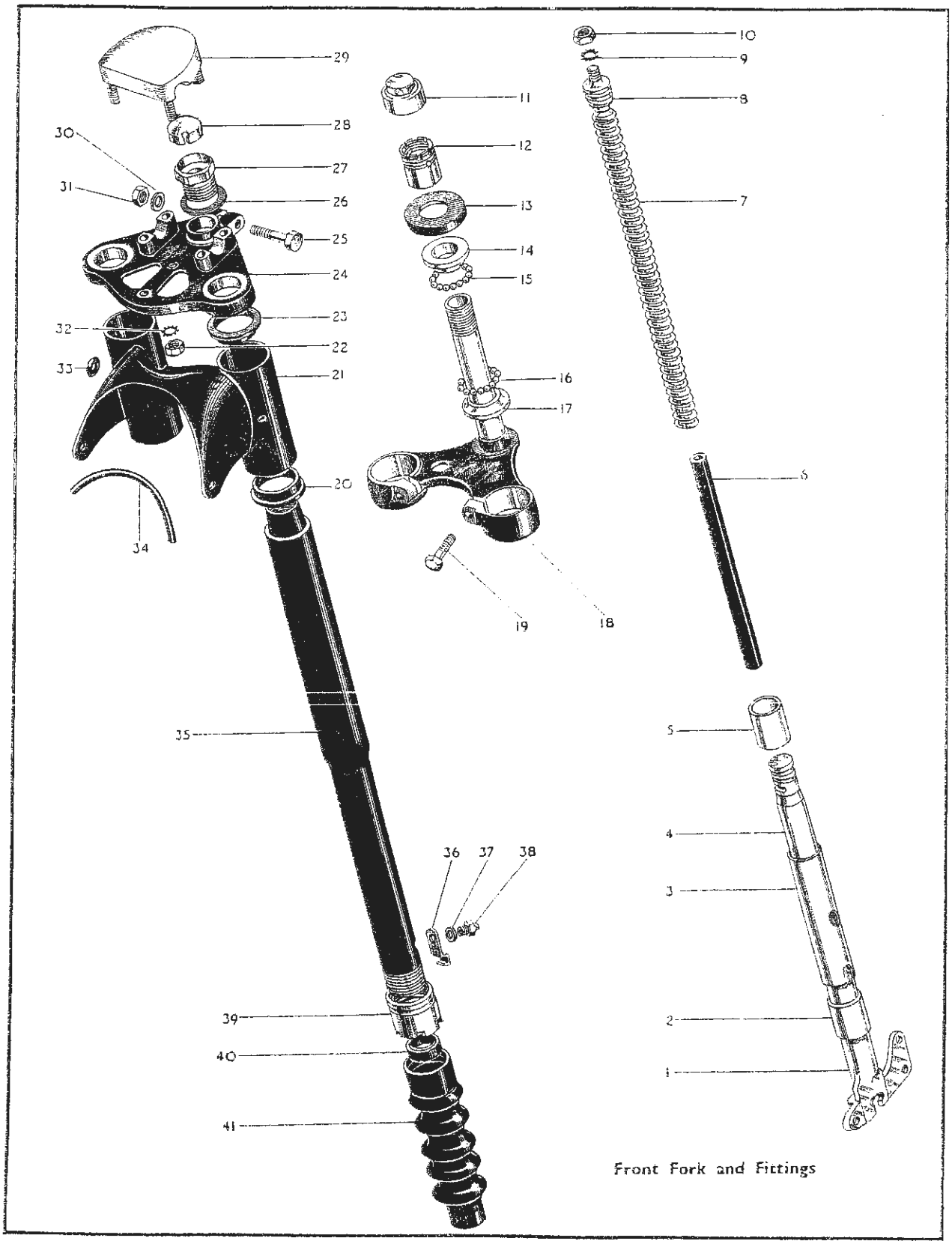

Front Fork and Fittings

Front Fork and Fittings
Front Hub and Wheel Fittings
Rear Hub and Wheel Fittings
Petrol Tank Handlebar Dual Seat and Battery Carrier
Mudguards Oil Tank Toolbox Chainguards and Silencer
Petrol Tank Handlebar Battery Carrier and Dual Seat
Rear Mudguard Chainguards Rear Brake Rod Silencer
Prop Stand Mudguards Oil Tank Toolbox and Chainguard
Tools and Sundries
Legshields and Bumper Bars
Electrical Equipment
Numerical Index

Plate 12 FRONT FORK and FITTINGS

C10L (Spring Frame) 1956

Plate Ref. Number.	Model.	Part No.	Description.	Number per set.
—	C10L	29-5369	Front fork assembled	1
1	C10L	29-5293	Fork end bolt (nearside)	1
2	C10L	36-382	Fork end bolt washer	1
3	C10L	2-1309	Front fork end drain plug	2
4	C10L	2-292	Front fork end drain plug washer	2
5	C10L	29-5351	Fork sliding tube complete (nearside)	1
6	C10L	29-5346	Front fork top bearing	2
7	C10L	29-5320	Front fork top bearing circlip	2
8	C10L	29-5313	Front fork oil seal	2
9	C10L	29-5310	Front fork oil seal holder complete (nearside)	1
10	C10L	29-5373	Front fork spring	2
11	C10L	29-5340	Fork outer sleeve complete (nearside)	1
12	C10L	29-5374	Headlamp distance piece	2
13	C10L	29-5273	Front fork shaft	2
14	C10L	29-5347	Front fork bottom bearing	2
15	C10L	45-5112	Front fork shaft plug	2
16	C10L	29-5370	Front fork bottom yoke complete	1
17	C10L	45-5107	Steering stop bolt	2
18	C10L	65-5320	Steering head ballrace cone (bottom)	1
19	C10L	3/16″	Steering head balls	48
20	C10L	65-5319	Steering head ballrace cone (top)	1
21	C10L	65-5321	Steering head dust cap	1
22	C10L	29-5290	Steering stem adjuster sleeve	1
23	C10L	21-5720	Front fork top yoke clamp bolt	1
24	C10L	45-5110	Front fork top yoke	1
25	C10L	29-5291	Cap for steering adjusting sleeve	1
26	C10L	29-5120	Handlebar securing cap with studs	1
27	C10L	65-5331	Front fork top nut	2
28	C10L	21-5104	Front fork top yoke clamp bolt nut	1
29	C10L	2-2138	Front fork top yoke clamp bolt washer	1
30	C10L	65-5332	Front fork top nut washer	2
31	C10L	36-382	Handlebar securing cap stud washer (shakeproof)	4
32	C10L	67-302	Handlebar securing cap stud nut	4
33	C10L	90-5128	Steering lock	1
34	C10L	24-5160	Front fork bottom yoke clip bolt nut	2
35	C10L	36-382	Front fork bottom yoke clip bolt washer (shakeproof)	2
36	C10L	29-5289	Front fork bottom yoke clip bolt	2
37	C10L	29-5342	Fork outer sleeve complete (offside)	1
38	C10L	29-5310	Front fork oil seal holder complete (offside)	1
39	C10L	29-5353	Fork sliding tube complete (offside)	1

Plate 13 FRONT FORK and FITTINGS

C11G and C12.

Plate Ref. Number.	Model.	Part No.	Description.	Number per set.
—	C11G	29-5124	Front fork and fittings assembled (1954)	1
—	C11G	29-5170	Front fork and fittings assembled (1955)	1
—	C12	29-5170	Front fork and fittings assembled	1
1	C11G	29-5293	Fork end bolt (nearside)	1
1	C12	65-5295	Fork end bolt (nearside)	1
2	C11G, C12	36-382	Fork end bolt spring washer	1
3	C11G, C12	2-292	Front fork end drain plug washer	2
4	C11G, C12	2-1309	Front fork end drain plug	2
5	C11G	29-5166	Fork sliding tube (nearside) complete (1955)	1
5	C12	29-5166	Fork sliding tube (nearside) complete	1
5	C11G	29-5351	Fork sliding tube (nearside) (1954)	1
6	C11G, C12	29-5346	Front fork top bearing	2
7	C11G, C12	29-5335	Top bush shim (.010″)	as reqd.
7	C11G, C12	29-5336	Top bush shim (.020″)	as reqd.
7	C11G, C12	29-5337	Top bush shim (.030″)	as reqd.
8	C11G, C12	29-5320	Front fork top bearing circlip	2
9	C11G, C12	29-5313	Front fork oil seal	2
10	C11G, C12	29-5310/3	Front fork oil seal holder complete	2
11	C11G, C12	65-5390	Front fork spring	2

Plate 12

FRONT FORK and FITTINGS

C10L (Spring Frame) 1956

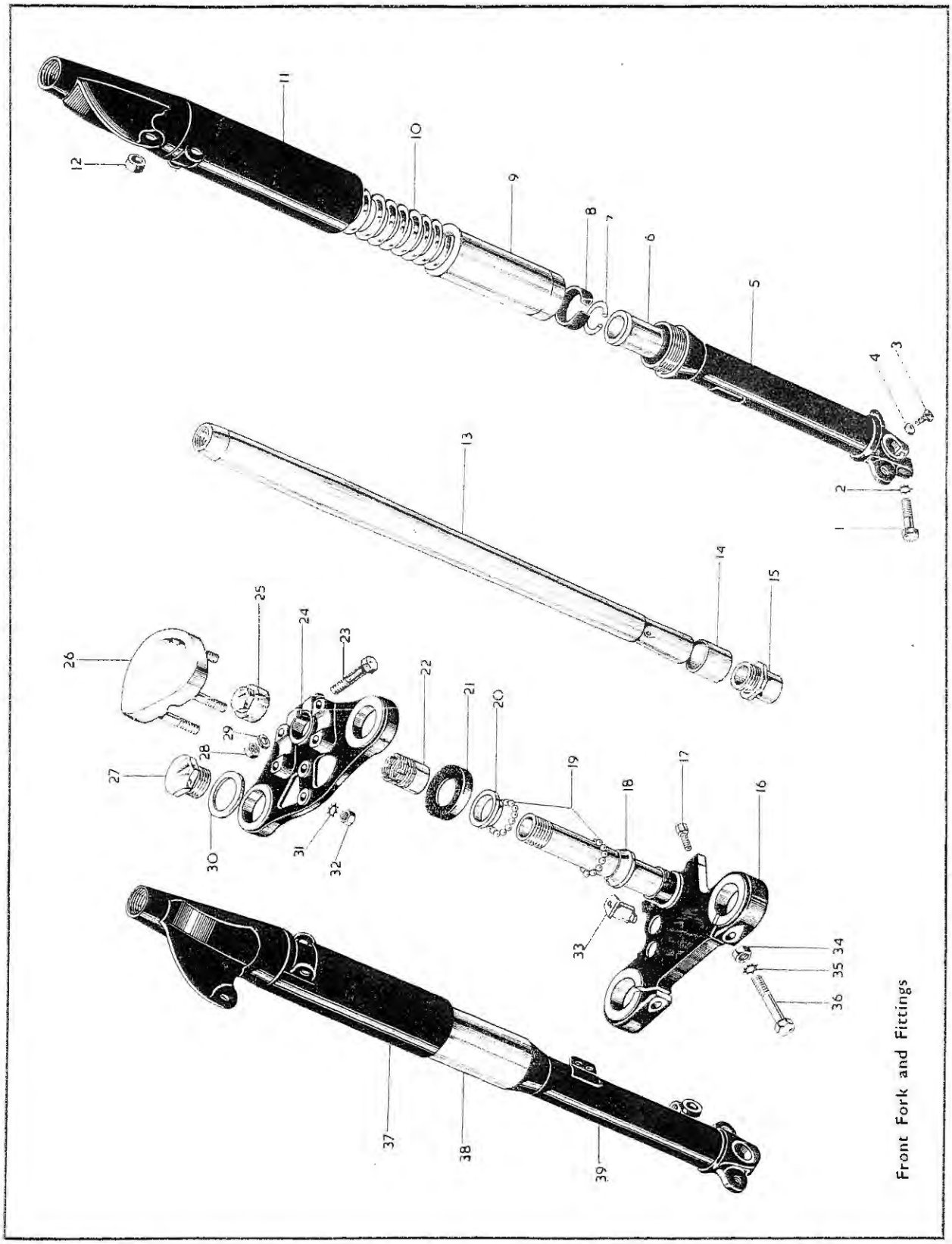

Front Fork and Fittings

Front Hub and Wheel Fittings

Rear Hub and Wheel Fittings

Petrol Tank Handlebar Dual Seat and Battery Carrier

Mudguards Oil Tank Toolbox Chainguards and Silencer

Petrol Tank Handlebar Battery Carrier and Dual Seat

Rear Mudguard Chainguards Rear Brake Rod Silencer

Prop Stand Mudguards Oil Tank Toolbox and Chainguard

Tools and Sundries

Legshields and Bumper Bars

Electrical Equipment

Numerical Index

Plate 13

FRONT FORK and FITTINGS

C11G, C12

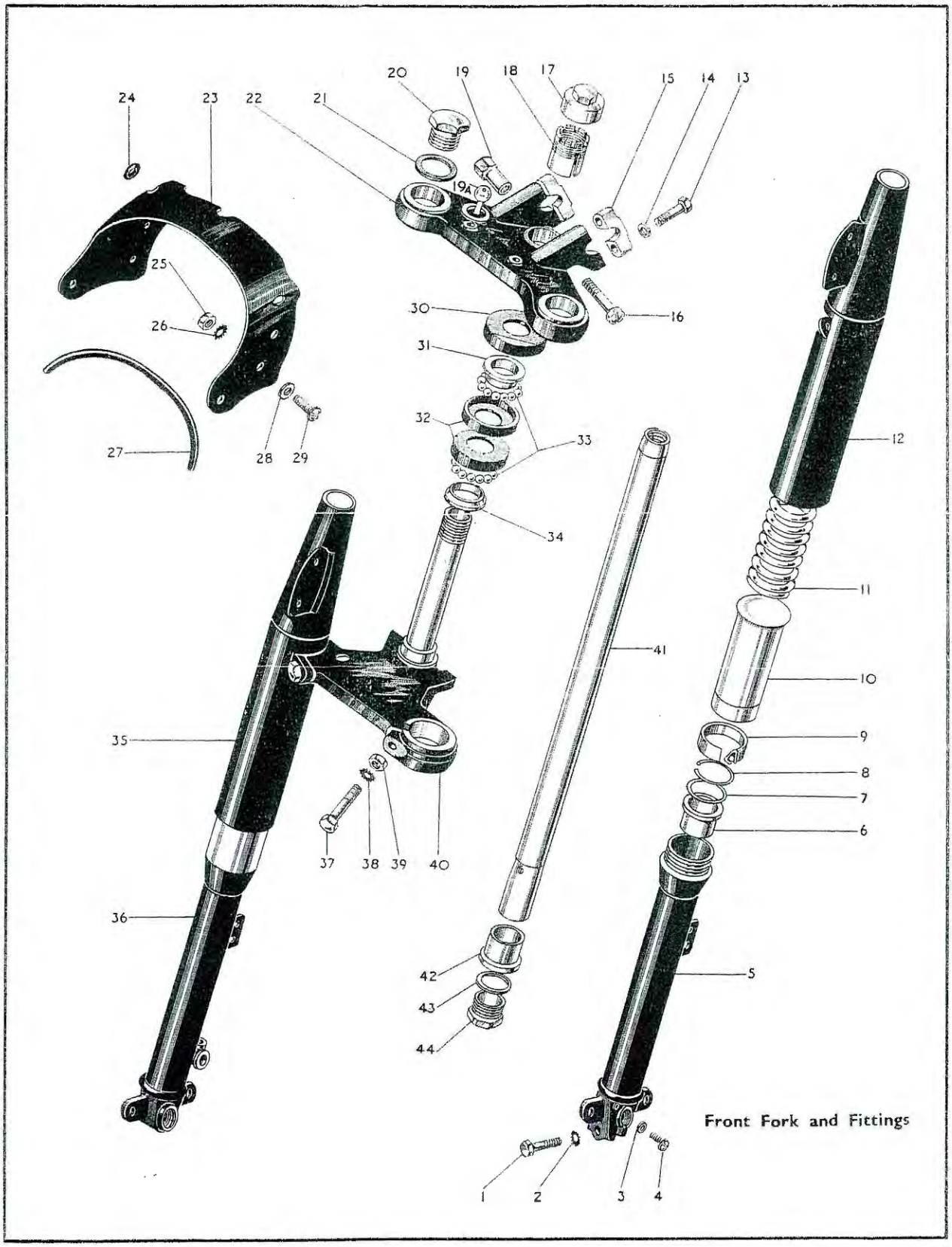

Front Fork and Fittings

Plate 13—*continued* FRONT FORK and FITTINGS

C11G and C12

Plate Ref. Number.	Model.	Part No.	Description	Number per set.
12	C11G, C12	29–5129	Fork outer sleeve complete (nearside)	1
13	C11G, C12	65–5334	Handlebar clip bolt	4
14	C11G, C12	15–5155	Handlebar clip bolt washer	4
15	C11G, C12	65–5333	Handlebar clip	2
16	C11G, C12	27–5135	Top yoke clip bolt	1
17	C11G, C12	29–5291	Steering stem adjusting cap	1
18	C11G, C12	29–5290	Steering stem adjusting sleeve	1
19	C11G, C12	29–5315	Top yoke clip bolt nut	1
19A	C11G, C12	65–5445	Steering head lock	1
20	C11G, C12	65–5331	Front fork top nut	2
21	C11G, C12	65–5332	Front fork top nut washer	2
22	C11G	29–5171	Front fork top yoke (1955)	1
22	C12	29–5171	Front fork top yoke	1
23	C11G, C12	29–5126	Headlamp cowl complete	1
24	C11G, C12	42–9009	Headlamp cowl cable grommet	2
25	C11G, C12	2–2395	Headlamp cowl sleeve bolt nut	4
26	C11G, C12	29–541	Headlamp cowl sleeve bolt washer	4
27	C11G, C12	67–6851	Headlamp beading	1
28	C11G, C12	2–525	Headlamp cowl sleeve bolt washer	8
29	C11G, C12	24–7178	Headlamp cowl sleeve bolt	4
30	C11G, C12	65–5321	Steering head dust cap	1
31	C11G, C12	65–5319	Steering head ballrace cone (top)	1
32	C11G, C12	65–4465	Ball head cup	2
33	C11G, C12	3/16"	Steering head balls	48
34	C11G, C12	65–5320	Steering head ballrace cone (bottom)	1
35	C11G, C12	29–5128	Fork outer sleeve (offside) complete	1
36	C11G	29–5167	Fork sliding tube (offside) complete (1955)	1
36	C12	29–5167	Fork sliding tube (offside) complete	1
36	C11G	29–5353	Fork sliding tube (offside) (1954)	1
37	C11G, C12	29–5289	Front fork bottom yoke clip bolt	2
38	C11G, C12	36–382	Fork bottom yoke clip cup bolt washer	1
39	C11G, C12	24–5160	Front fork bottom yoke clip bolt nut	2
40	C11G, C12	29–5286	Front fork bottom yoke complete	1
41	C11G, C12	29–5273	Front fork shaft	2
42	C11G, C12	29–5347	Front fork bottom bearing	2
43	C11G, C12	29–5338	Fork shaft plug washer	2
44	C11G, C12	29–5283	Front fork shaft plug	2

Plate 14 FRONT HUB and WHEEL FITTINGS

C10L (Spring Frame) (1954/5)

Plate Ref. Number.	Model.	Part No.	Description.	Number per set.
—	C10L	29–5924/42	Front wheel complete with spindle and bearings (less brake and tyre).	1
1	C10L	90–5575	Front hub spindle nut	1
2	C10L	90–5544	Hub cover plate locking sleeve	1
3	C10L	2–440	Brake cam nut	1
4	C10L	66–4708	Brake cam nut washer (shakeproof)	1
5	C10L	15–431	Brake cam bearing washer (plain)	1
6	C10L	24–7800	Brake operating lever	1
7	C10L	65–5674	Brake cam bearing oil hole cover	1
8	C10L	29–5935	Front brake cover plate complete	1
9	C10L	29–5856	Brake cam complete	1
10	C10L	29–5850	Brake shoe complete with lining	2
11	C10L	90–5539	Felt retaining cup	1
12	C10L	90–5540	Hub felt washer	1
13	C10L	90–5538	Felt retaining washer (steel)	1
14	C10L	90–5537	Hub bearing lockring	1
15	C10L	90–5536	Bearing locating washer	1
16	C10L	90–5535	Hub bearing distance piece	1
17	C10L	29–5928/40	Front hub shell complete with spindle and bearings	1
18	C10L	27–6813	Front wheel spoke nipple	36
19	C10L	90–5584	Front wheel spoke (left-hand)	18
20	C10L	90–5575	Front hub spindle nut	1
21	C10L	90–5543	Front hub spindle locknut	1

Plate 14

FRONT HUB and WHEEL FITTINGS

C10L (Spring Frame) 1954/5

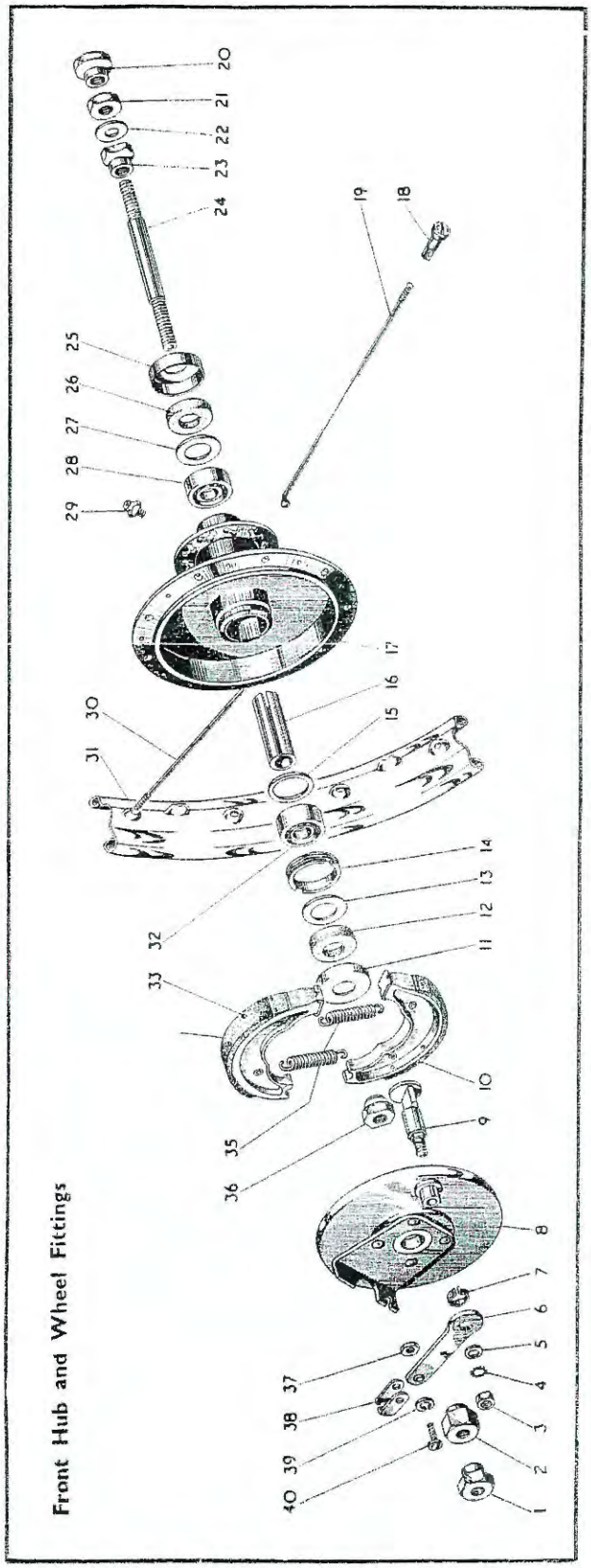

Plate 14—*continued* FRONT HUB and WHEEL FITTINGS

C10L (Spring Frame) (1954/5)

Plate Ref. Number.	Models.	Part No.	Description.	Number per set
22	C10L	90–5545	Hub spindle shim (.010") (as required)	1
23	C10L	90–5546	Hub bearing locknut	1
24	C10L	90–5541	Front hub spindle	1
25	C10L	90–5539	Felt retaining cup	1
26	C10L	90–5540	Hub felt washer	1
27	C10L	90–5538	Felt retaining washer (steel)	1
28	C10L	90–5525	Hub bearing	1
29	C10L	28–2080	Hub shell grease nipple	1
30	C10L	29–5940	Front wheel spoke (right-hand)	18
31	C10L	90–5504/3	Front wheel rim (WM1–19)	1
32	C10L	90–5525	Hub bearing	1
33	C10L	29–5853	Brake shoe lining rivet	14
34	C10L	29–5852	Brake shoe lining	2
35	C10L	65–5904	Brake shoe spring	2
36	C10L	90–5546	Hub bearing locknut	1
37	C10L	2–443	Brake operating lever toggle nut	1
38	C10L	29–5871	Brake operating lever toggle	1
39	C10L	2–1462	Brake operating lever toggle washer (spring)	1
40	C10L	2–510	Brake operating lever toggle screw	1

Plate 15 FRONT HUB and WHEEL FITTINGS

C11G (1954) C10L (1956)

Plate Ref. Number.	Model.	Part No.	Description.	Number per set.
—	C10L, C11G	29–5770/41	Front wheel complete (less brake and tyre)	1
1	C10L, C11G	29–5837	Front hub spindle	1
2	C10L, C11G	29–5842	Front hub locking nut	1
3	C10L, C11G	29–5833	Front hub adjusting cone	1
4	C10L, C11G	29–5840	Front hub felt retaining cup	1
5	C10L, C11G	24–6790	Front hub washer (felt)	1
6	C10L, C11G	29–5841	Front hub retaining washer	1
7	C10L, C11G	5/16" dia.	Balls	11
8	C10L, C11G	29–5832	Front hub cup	1
9	C11G	15–5290	Front hub grease nipple	1
9	C10L	28–2080	Grease nipple (1956)	1
10	C10L, C11G	29–5825/37	Front hub shell complete with bearing	1
11	C10L, C11G	24–7012	Front wheel spoke (left-hand)	20
12	C10L, C11G	29–5832	Front hub cup	1
13	C10L, C11G	5/16" dia.	Balls	11
14	C10L, C11G	29–5841	Front hub retaining washer	1
15	C10L, C11G	24–6790	Front hub washer (felt)	1
16	C10L, C11G	29–5840	Front hub felt retaining cup	1
17	C10L, C11G	29–5834	Front hub fixed cone	1
18	C10L, C11G	29–5853	Front brake shoe lining rivet	14
19	C10L, C11G	29–5850	Front brake shoe with lining	1
20	C10L, C11G	29–5863	Front brake cover plate	1
21	C10L, C11G	29–5842	Front hub locking nut	1
22	C10L, C11G	29–5852	Front brake shoe lining	2
23	C10L, C11G	2–440	Front brake operating nut	1
24	C10L, C11G	66–4708	Front brake operating lever washer (shakeproof)	1
25	C10L, C11G	15–431	Front brake operating lever washer (plain)	1
26	C10L, C11G	24–7800	Front brake lever	1
27	C10L, C11G	65–5674	Front brake cam bearing oil hole clip	1
28	C10L, C11G	65–5904	Front brake shoe spring	2
30	C10L, C11G	29–5856	Front brake cam complete	1
31	C10L, C11G	29–5776/3	Front wheel rim	1
32	C10L, C11G	29–5839	Front hub spindle nut	1
33	C10L, C11G	29–5835	Front hub spindle sleeve	1
34	C10L, C11G	29–5836	Front hub spindle distance piece	1
35	C10L, C11G	24–7012	Front wheel spoke (right-hand)	20
36	C10L, C11G	27–6813	Front wheel spoke nipple	40

Plate 15 FRONT HUB and WHEEL FITTINGS Plate 16

C11G (1954), C10L (1956) C11G (1955)

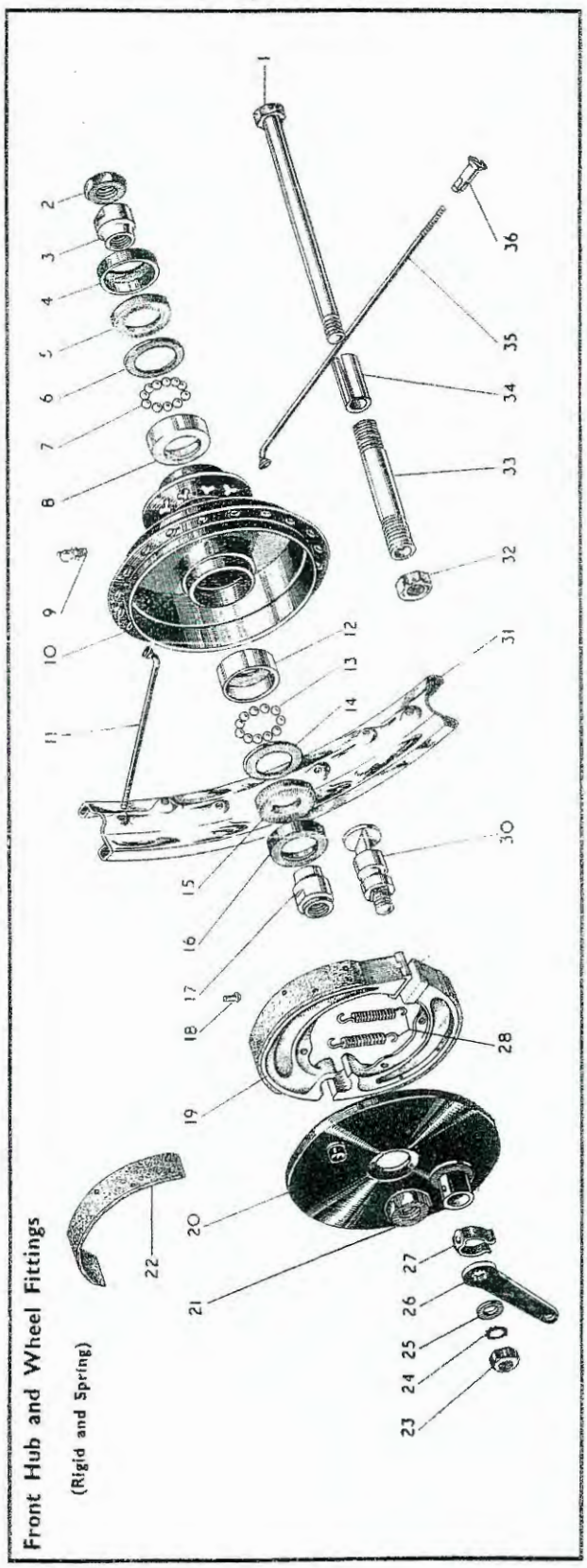

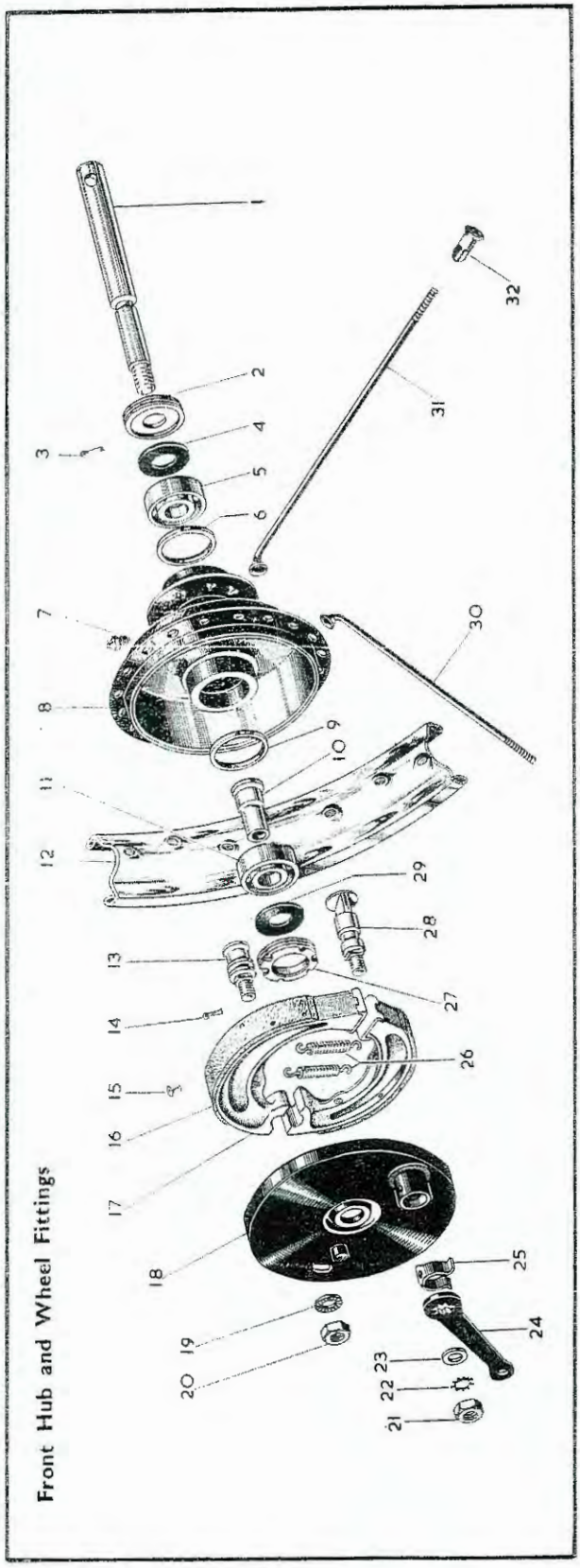

Plate 16 FRONT HUB and WHEEL FITTINGS

C11G (1955)

Plate Ref. Number.	Model.	Part No.	Description.	Number per set.
—	C11G	29–5958	Front wheel complete (less tyres and brake)	1
1	C11G	29–5971	Front hub spindle	1
2	C11G	67–5561	Front hub bearing locking ring (nearside)	1
3	C11G	35–701	Locking ring retaining pin (nearside)	1
4	C11G	67–5563	Front hub washer (nearside) (oil proof synthetic rubber)	1
5	C11G	65–5883	Front hub ball journal (nearside)	1
6	C11G	65–5884	Front hub bearing thrust washer (nearside)	1
7	C11G	28–2080	Front hub grease nipple	1
8	C11G	29–5962	Front hub complete with spindle and bearing (less brake)	1
9	C11G	65–5884	Front hub bearing thrust washer (offside)	1
10	C11G	67–5565	Front hub spindle sleeve	1
11	C11G	65–5883	Front hub ball journal (offside)	1
12	C11G	29–5959	Front wheel rim	1
13	C11G	65–5899	Front brake shoe fulcrum pin	1
14	C11G	35–701	Locking ring retaining pin (offside)	1
15	C11G	35–6436	Front brake shoe lining rivet	14
16	C11G	65–5903	Front brake shoe lining	2
17	C11G	65–5901	Front brake shoe complete with linings	2
18	C11G	29–5968	Front brake cover plate complete	1
19	C11G	24–8045	Front brake shoe fulcrum pin serrated washer	1
20	C11G	24–5860	Front brake shoe fulcrum pin nut	1
21	C11G	2–440	Front brake shoe cam nut	1
22	C11G	66–4708	Front brake shoe cam washer (shakeproof)	1
23	C11G	15–431	Front brake shoe cam washer (plain)	1
24	C11G	65–5907	Front brake shoe cam lever	1
25	C11G	65–5674	Front brake shoe cam bearing oil hole clip	1
26	C11G	65–5904	Front brake shoe spring	2
27	C11G	67–5562	Front hub and bearing locking ring (offside)	1
28	C11G	65–5905	Front brake shoe cam complete	1
29	C11G	67–5564	Front hub rubber washer (oilproof)	1
30	C11G	65–5910	Front wheel spoke (short)	20
31	C11G	27–7012	Front wheel spoke (long)	20
32	C11G	27–6813	Front wheel spoke nipple	40

Plate 17 FRONT HUB and WHEEL FITTINGS

C12 (Swinging Arm)

Plate Ref. Number.	Model.	Part No.	Description.	Number per set.
—	C12	29–5973	Front wheel complete with bearings (less brake and tyre)	
1	C12	2–440	Front brake shoe cam nut	1
2	C12	66–4708	Front brake shoe cam washer (spring)	1
3	C12	15–431	Front brake shoe cam washer (plain)	1
4	C12	65–5907	Front brake shoe cam lever	1
5	C12	65–5674	Front brake shoe cam bearing oil hole clip	1
6	C12	29–5968	Front brake cover plate	1
7	C12	24–5860	Front brake shoe fulcrum pin nut	1
8	C12	24–8045	Front brake shoe fulcrum pin washer (serrated)	1
9	C12	65–5903	Front brake shoe lining	2
10	C12	65–5901	Front brake shoe complete	2
11	C12	65–5904	Front brake shoe spring	2
12	C12	67–5562	Front hub bearing locking ring (offside)	1
13	C12	67–5564	Front hub washer (rubber)	1
14	C12	67–5565	Front hub spindle sleeve	1
15	C12	65–5899	Front brake shoe fulcrum pin	1
16	C12	29–5979	Front hub complete with bearings	1
17	C12	29–5976	Front wheel spoke	40
18	C12	29–5991	Front wheel rim	1
19	C12	27–6813	Front wheel spoke nipple	40
20	C12	35–701	Locking ring retaining pin (offside and nearside)	2
21	C12	29–5971	Front hub spindle	1
22	C12	67–5561	Front hub bearing locking ring (nearside)	1
23	C12	67–5563	Front hub washer (rubber) (nearside)	1
24	C12	65–5883	Front hub ball journal	2
25	C12	65–5884	Front hub bearing thrust washer	2
26	C12	65–5905	Brake shoe cam	1
27	C12	35–6436	Front brake shoe lining rivet	14
28	C12	2–443	Front brake cable toggle end screw nut	1
29	C12	29–5871	Front brake cable toggle end	1
30	C12	2–1462	Front brake cable toggle washer (spring)	1
31	C12	2–510	Front brake cable toggle end screw	1

Plate 17

FRONT HUB and WHEEL FITTINGS

C12 (Swinging Arm)

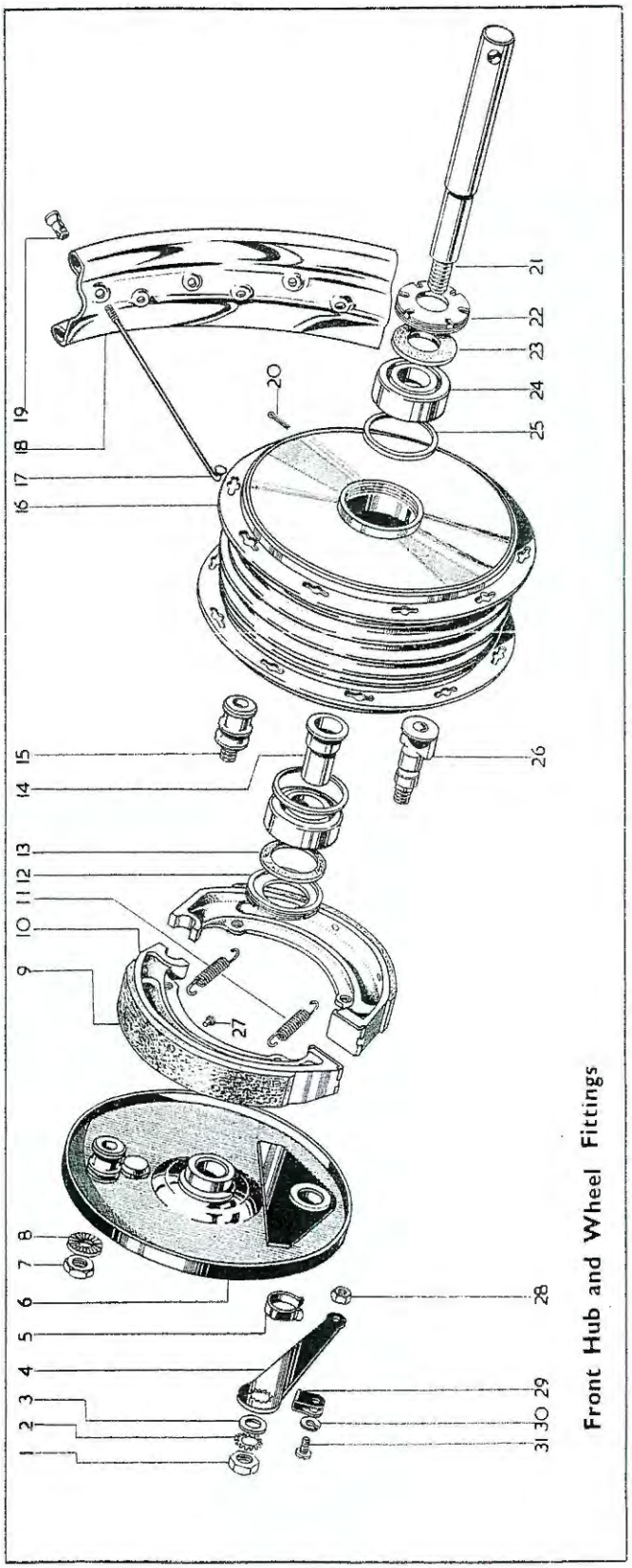

Front Hub and Wheel Fittings

Plate 18 REAR HUB and WHEEL FITTINGS

C10L

Plate Ref. Number.	Model	Part No.	Description	Number per set.
—	C10L	90-6153/42	Rear wheel complete with spindle and bearings (less brake and tyre).	1
1	C10L	66-5541	Rear hub barrel cap (supplied only when speedometer is not fitted).	1
2	C10L	24-5909	Rear hub barrel cap washer (when speedometer is not fitted)	1
3	C10L	90-6084	Chain adjuster cap	1
4	C10L	2-51	Chain adjuster nut	1
5	C10L	90-6067	Hub spindle nut	2
6	C10L	90-6085	Chain adjuster	1
7	C10L	90-6066	Hub spindle locknut	1
8	C10L	29-8740	Speedometer drive washer (1954/5)	1
9	C10L	66-6266	Speedometer drive (1954/5)	1
10	C10L	90-6072	Felt retaining cap	1
11	C10L	90-6073	Hub washer (felt) (offside)	1
12	C10L	90-6064	Hub distance piece	1
13	C10L	90-6075	Felt retaining washer (steel)	2
14	C10L	90-6063	Hub bearing	1
15	C10L	90-6092	Hub spindle with nut	1
16	C10L	28-2080	Hub grease nipple	1
17	C10L	90-6090/40	Rear hub complete with spindle and bearings (1954/5)	1
17	C10L	90-6090	Rear hub complete with spindle and bearings (1956)	1
18	C10L	15-7072	Rear wheel spoke (left-hand) (1954/5)	18
18	C10L	90-6042	Rear wheel spoke (left-hand) (1956)	18
19	C10L	90-6155/3	Rear wheel rim	1
20	C10L	90-5522	Brake shoe lining	2
21	C10L	90-6072	Felt retaining cap	1
22	C10L	90-5549	Brake shoe lining rivets	14
23	C10L	90-5520	Brake shoe with lining	2
24	C10L	65-5904	Brake shoe spring	2
25	C10L	90-6059	Rear hub cover plate complete	1
26	C10L	90-6067	Hub spindle nut	1
27	C10L	2-51	Chain adjuster nut	1
28	C10L	90-6084	Chain adjuster cap	1
29	C10L	90-6085	Chain adjuster	1
30	C10L	21-5103	Brake operating lever nut	1
31	C10L	90-6096	Cover plate locking sleeve	1
32	C10L	36-382	Brake operating lever washer	1
33	C10L	15-5155	Brake operating lever washer	1
34	C10L	90-6043	Brake operating lever	1
35	C10L	90-6095	Cover plate distance piece	1
36	C10L	90-5533	Brake cam	1
37	C10L	90-6074	Hub washer (felt) (nearside)	1
38	C10L	90-6071	Hub bearing locking	1
39	C10L	90-6075	Felt retaining washer (steel)	1
40	C10L	90-6063	Hub bearing	1
41	C10L	90-6076	Hub bearing thrust washer	1
42	C10L	90-6064	Hub bearing distance piece	1
43	C10L	90-5584	Rear wheel spoke (right-hand)	18
44	C10L	27-6813	Rear wheel spoke nipple	36
45	C10L	29-9317	Transmission chain (110 pitches)	1

Plate 19 REAR HUB and WHEEL FITTINGS

C11G (Spring)

Plate Ref. Number.	Model.	Part No.	Description.	Number per set.
—	C11G	29-6201/41	Rear wheel complete (less brake and tyre)	1
1	C11G	29-6241	Rear brake operating lever	1
2	C11G	15-431	Rear brake operating lever washer (plain)	1
3	C11G	66-4708	Rear brake operating lever washer (shakeproof)	1
4	C11G	2-440	Rear brake operating nut	1
5	C11G	24-7122	Hub spindle nut	1
6	C11G	29-6243	Chain adjuster	1
7	C11G	36-3528	Hub spacing washer (offside)	1
8	C11G	29-6217	Hub cover plate spindle nut	1
9	C11G	29-5852	Rear brake shoe lining	2

C10L

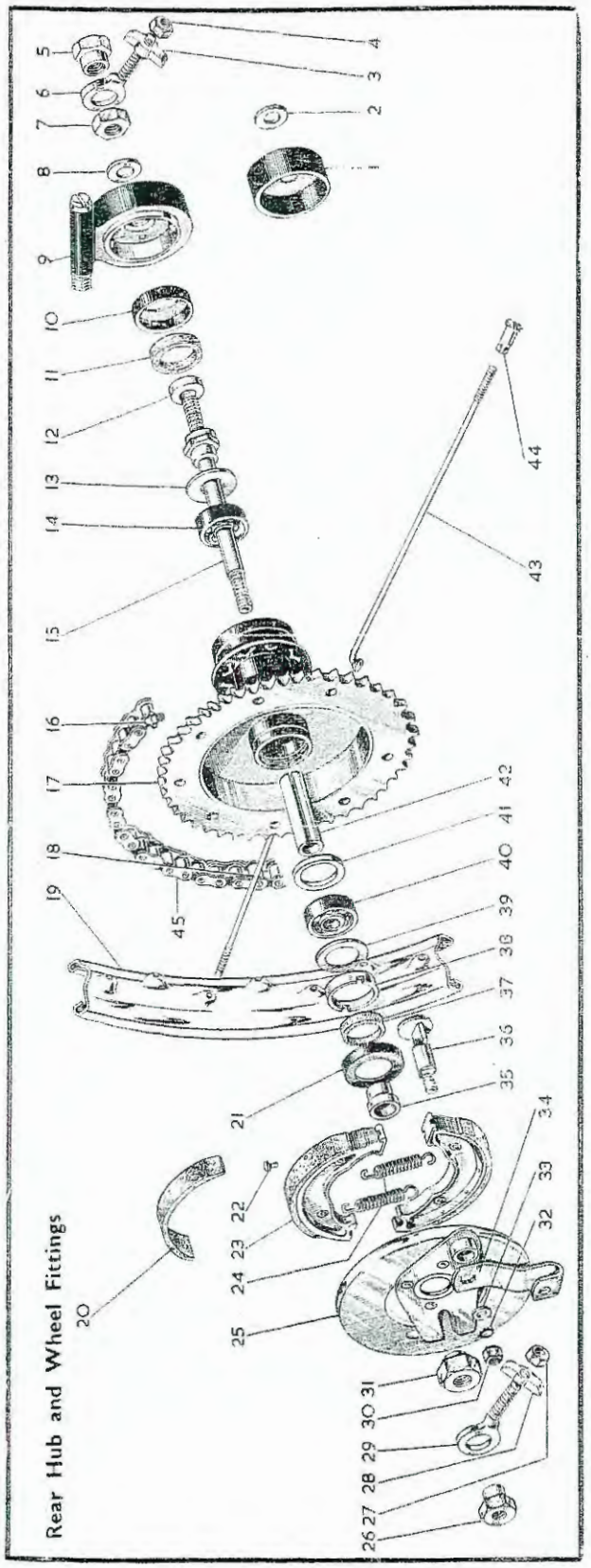

C11G (Spring)

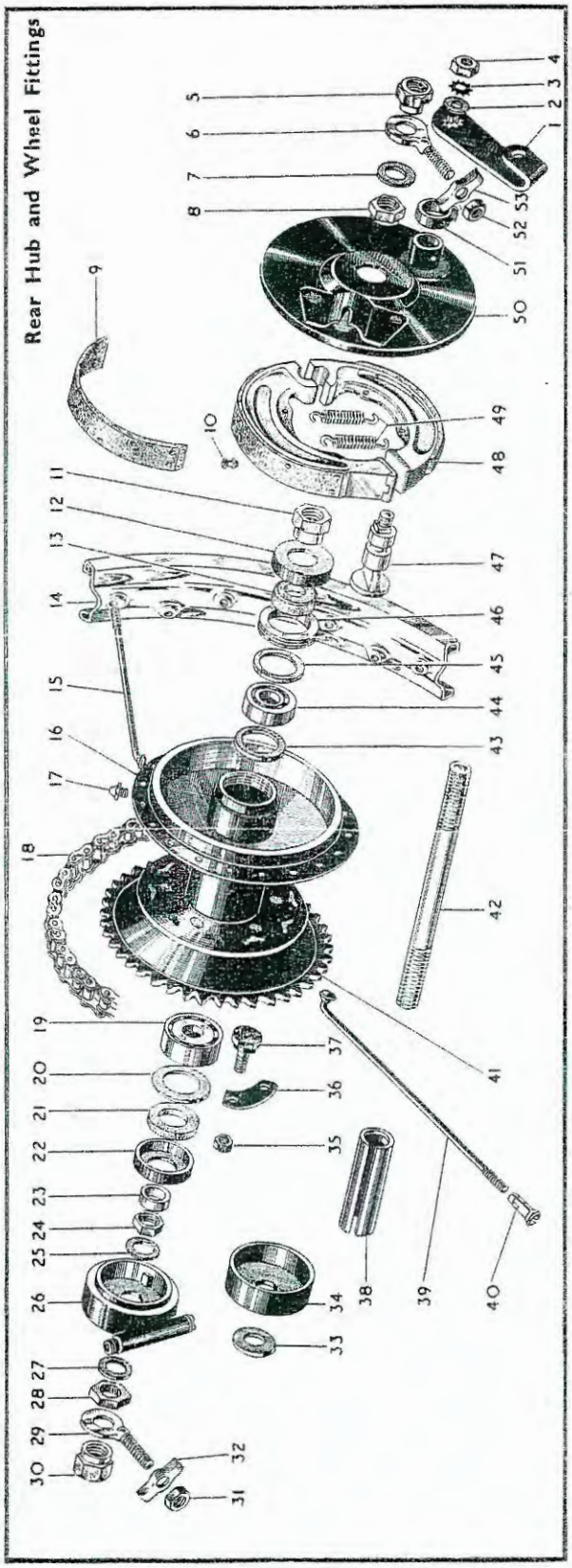

Plate 19—*continued.* REAR HUB and WHEEL FITTINGS

C11G (Spring)

Plate Ref. Number.	Model.	Part No.	Description.	Number per set.
10	C11G	29–5853	Rear brake shoe lining rivet	14
11	C11G	29–6216	Hub spindle bearing locknut (offside)	1
12	C11G	29–6235	Hub felt washer retaining cup	1
13	C11G	29–6232	Hub washer (felt) (offside)	1
14	C11G	29–5776/3	Rear wheel rim	1
15	C11G	24–7014	Rear wheel spoke (right-hand)	20
16	C11G	29–6226/37	Rear hub shell complete with bearings	1
17	C11G	28–2080	Rear hub shell grease nipple	1
18	C11G	65–9184	Rear transmission chain	1
19	C11G	29–6211	Rear hub bearing (nearside)	1
20	C11G	2–520	Hub bearing washer (nearside)	1
21	C11G	29–6234	Hub washer (felt) (nearside)	1
22	C11G	29–6235	Hub felt washer retaining cup	1
23	C11G	29–6237	Hub distance piece	1
24	C11G	24–898	Hub spindle bearing locknut (nearside)	1
25	C11G	66–5524	Speedometer gearbox spacing washer	1
26	C11G	29–5737	Speedometer gearbox (required when 3-speed gearbox is fitted)	1
27	C11G	66–5524	Speedometer gearbox spacing washer (1 per set when 3-speed gearbox is fitted).	1
28	C11G	29–6238	Speedometer gearbox locking nut	1
29	C11G	29–6243	Chain adjuster	1
30	C11G	24–7122	Hub spindle nut	1
31	C11G	2–51	Chain adjuster nut	1
32	C11G	90–6084	Chain adjuster cap	1
33	C11G	36–3528	Hub spacing washer (2 per set when 4-speed box is fitted)	1
34	C11G	66–5541	Hub barrel nut (required when speedo is not fitted)	1
35	C11G	29–6240	Rear hub flange and chainwheel bolt nut	6
36	C11G	29–6188	Rear hub flange and chainwheel bolt lock strip	3
37	C11G	29–6187	Rear hub flange and chainwheel bolt	6
38	C11G	29–6230	Hub bearing distance tube	1
39	C11G	24–7012	Rear wheel spoke (left-hand)	20
40	C11G	27–6813	Rear wheel spoke nipple	40
41	C11G	29–6186	Rear hub chainwheel	1
42	C11G	29–6236	Rear hub spindle	1
43	C11G	29–6229	Hub bearing locating washer (offside)	1
44	C11G	90–41	Rear hub bearing	1
45	C11G	29–6231	Hub felt washer retaining ring (offside)	1
46	C11G	29–6233	Hub bearing locking ring (offside)	1
47	C11G	29–5856	Rear brake cam complete	1
48	C11G	29–5859	Rear brake shoe complete with linings	2
49	C11G	85–5904	Rear brake shoe springs	2
50	C11G	29–6207	Rear hub cover plate with fixed fittings	1
51	C11G	65–5674	Rear brake cam oil hole clip	1
52	C11G	2–51	Chain adjuster nut	1
53	C11G	90–6084	Chain adjuster cup	1

Plate 20 REAR HUB and WHEEL FITTINGS

C11G (Rigid)

Plate Ref. Number.	Model	Part No.	Description	Number per set.
—	C11G	29–6170/41	Rear wheel complete (less brake and tyre)	1
1	C11G	24–7012	Rear wheel spoke (left-hand)	20
2	C11G	29–5791	Rear hub spindle	1
3	C11G	27–6732	Rear hub spindle nut	1
4	C11G	27–6738	Rear hub adjusting plate	1
5	C11G	27–6716	Rear hub spindle locknut	1
6	C11G	15–39	Speedometer gearbox washer	1
7	C11G	29–5738	Speedometer gearbox	1
8	C11G	27–6716	Rear hub spindle locknut	1
9	C11G	29–5702	Rear hub adjusting cone	1
10	C11G	29–5710	Rear hub felt retaining cup	1
11	C11G	24–7047	Rear hub washer (felt)	1
12	C11G	29–5715	Rear hub felt retaining washer	1
13	C11G	5/16" dia.	Balls	10
14	C11G	29–5701	Rear hub cup	1

Plate 20

REAR HUB and WHEEL FITTINGS

C11G (Rigid)

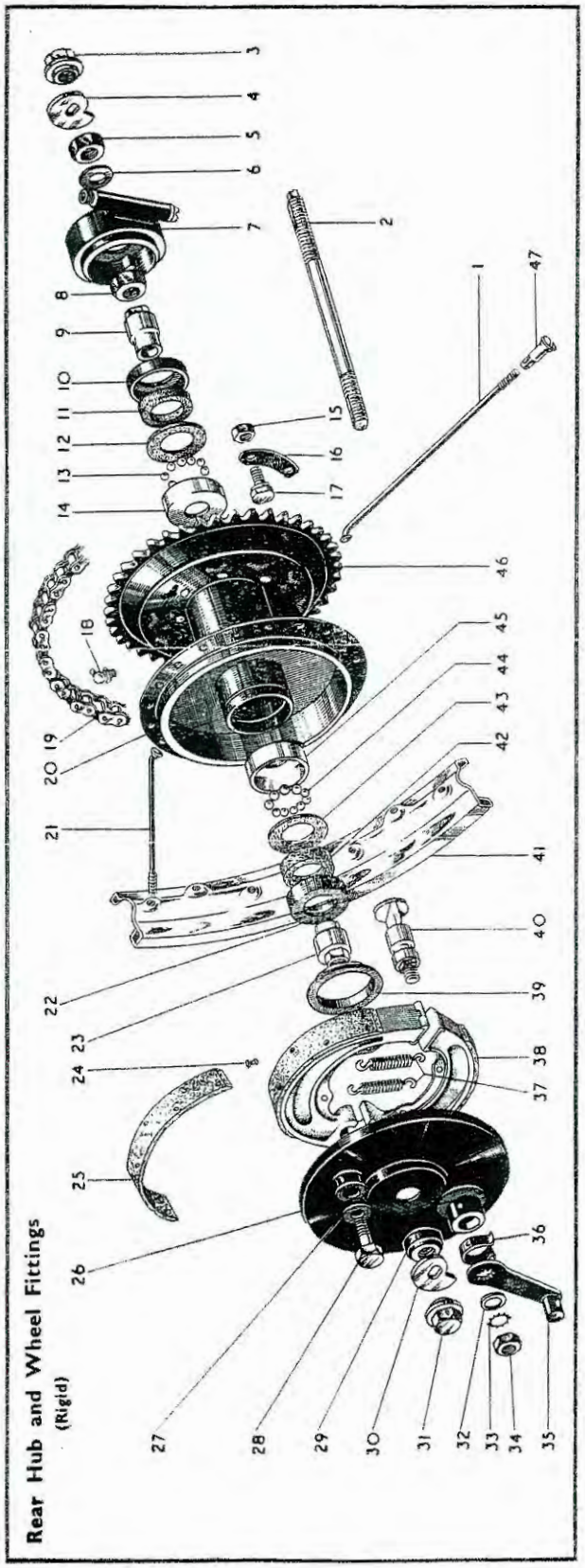

Plate 20—*continued* REAR HUB and WHEEL FITTINGS

C11G (Rigid)

Plate Ref. Number.	Model.	Part No.	Description.	Number per set.
15	C11G	2–833	Rear hub flange and chainwheel bolt nut	6
16	C11G	29–6188	Rear hub flange and chainwheel bolt lock strip	3
17	C11G	29–6187	Rear hub flange and chainwheel bolt	6
18	C11G	15–5290	Rear hub grease nipple	1
19	C11G	65–9188	Rear transmission chain	1
20	C11G	29–6181/37	Rear hub shell complete with bearings	1
21	C11G	24–7014	Rear wheel spoke (right-hand)	20
22	C11G	29–5710	Rear hub felt retaining cup	1
23	C11G	29–5700	Rear hub cone	1
24	C11G	29–5853	Rear brake shoe lining rivet	14
25	C11G	29–5852	Rear brake shoe lining	2
26	C11G	29–6196	Rear hub cover plate with fixed fittings	1
27	C11G	24–7911	Rear brake anchor bolt washer (plain)	1
28	C11G	29–6110	Rear brake anchor bolt	1
29	C11G	65–5832	Rear hub distance piece	1
30	C11G	27–6738	Rear hub adjusting plate	1
31	C11G	27–6732	Rear hub spindle nut	1
32	C11G	15–431	Rear brake operating lever washer (plain)	1
33	C11G	66–4708	Rear brake operating lever washer (shakeproof)	1
34	C11G	2–440	Rear brake operating lever nut	1
35	C11G	29–7360	Rear brake operating lever complete	1
36	C11G	65–5674	Rear brake cam oil hole clip	1
37	C11G	65–5904	Rear brake shoe springs	2
38	C11G	29–5850	Rear brake shoe complete	2
39	C11G	29–5905	Rear hub oil retaining washer	1
40	C11G	29–5856	Rear brake cam complete	1
41	C11G	29–5776/3	Rear wheel rim	1
42	C11G	24–7047	Rear hub washer (felt)	1
43	C11G	29–5715	Rear hub felt retaining washer	1
44	C11G	5/16" dia.	Balls	10
45	C11G	29–5701	Rear hub cup	1
46	C11G	29–6186	Rear hub chainwheel	1
47	C11G	27–6813	Rear wheel spoke nipple	40

Plate 21 REAR HUB and WHEEL FITTINGS

C12 (Swinging Arm)

Plate Ref. Number	Model	Part No.	Description	Number. per set
—	C12	29–6276	Rear wheel complete with bearings (less brake and tyre)	1
1	C12	29–6230	Hub bearing distance tube	1
2	C12	29–6229	Hub bearing locating washer (offside)	1
3	C12	90–11	Rear hub bearing (offside)	1
4	C12	29–6231	Hub felt washing retaining ring (offside)	1
5	C12	29–6233	Hub bearing locking ring (offside)	1
6	C12	29–6232	Hub felt washer (offside)	1
7	C12	29–6235	Hub felt washer retaining cup (offside)	1
8	C12	24–563	Chain adjuster nut	2
9	C12	29–6312	Rear chain adjuster cap	2
10	C12	29–6313	Chain adjuster	2
11	C12	29–6311	Hub spindle nut (offside)	1
12	C12	29–6320	Hub spindle locknut (offside)	1
13	C12	29–6237	Hub distance piece (offside)	1
14	C12	29–6310	Hub spindle	1
15	C12	29–5940	Rear wheel spoke	40
16	C12	27–6813	Rear wheel spoke nipple	40
17	C12	29–5991	Rear wheel rim	1
18	C12	29–6284	Rear hub complete with bearings	1
18A	C12	29–9427	Transmission chain (rear)	1
19	C12	29–5850	Rear brake shoe complete	2
20	C12	65–5904	Rear brake shoe spring	2
21	C12	29–5853	Rear brake shoe lining rivet	14
22	C12	29–5852	Rear brake shoe lining	2
23	C12	29–5856	Rear brake cam complete	1
24	C12	29–6211	Rear hub bearing (nearside)	1

Plate 21

REAR HUB and WHEEL FITTINGS

C12 (Swinging Arm)

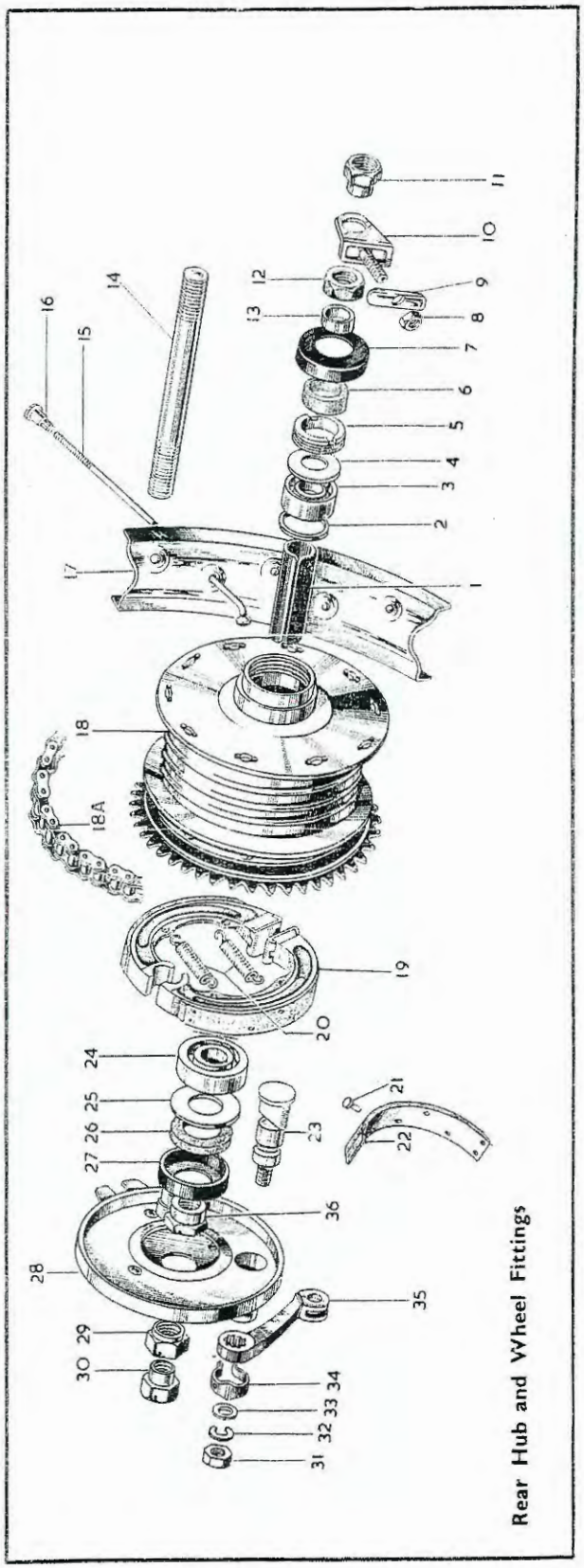

Rear Hub and Wheel Fittings

Plate 21—*continued* REAR HUB and WHEEL FITTINGS

C12 (Swinging Arm)

Plate Ref. Number.	Model.	Part No.	Description.	Number per set.
25	C12	2–520	Hub bearing washer (nearside)	1
26	C12	29–6234	Hub felt washer (nearside)	1
27	C12	29–6235	Hub felt washer retaining cup (nearside)	1
28	C12	29–6274	Rear brake cover plate with fixed fittings	1
29	C12	29–6217	Hub cover plate spindle nut	1
30	C12	27–6311	Hub spindle nut (nearside)	1
31	C12	2–440	Rear brake operating lever nut	1
32	C12	66–4708	Rear brake operating lever washer (spring)	1
33	C12	15–431	Rear brake operating lever washer (plain)	1
34	C12	65–5674	Rear brake cam oil hole clip	1
35	C12	29–6319	Rear brake operating lever	1
36	C12	29–6216	Hub spindle bearing locknut (nearside)	1

Plate 22 PETROL TANK, HANDLEBAR, DUAL SEAT and BATTERY CARRIER

C10L

Plate Ref. Number.	Model.	Part No.	Description.	Number per set.
1	C10L	2–923	Dual seat stay bolt washer (plain) (1954)	12
2	C10L	21–5454	Dual seat stay bolt (1954)	12
3	C10L	90–9096	Dual seat rear support bracket (1954)	1
4	C10L	90–9097	Mudguard bridge (dual seat rear bracket) (1954)	1
5	C10L	27–8560	Mudguard bridge bolt washer (plain)	2
6	C10L	2–1462	Mudguard bridge bolt washer (spring)	2
7	C10L	21–5102	Mudguard bridge bolt nut	2
8	C10L	90–9096	Dual seat rear support bracket (1954)	1
9	C10L	29–9384	Dual seat stay complete (offside) (1954)	1
10	C10L	21–6173	Carrier fixing hole screw	2
11	C10L	27–8560	Carrier fixing hole screw washer (plain)	2
12	C10L	2–1462	Carrier fixing hole screw washer (spring)	2
13	C10L	21–5102	Carrier fixing hole screw nut	2
14	C10L	27–8560	Mudguard bridge bolt washer (plain)	2
15	C10L	21–5401	Mudguard bridge bolt	2
16	C10L	29–9381	Dual seat front support bracket complete (1954)	1
17	C10L	35–33	Dual seat front fixing bolt washer (spring) (1955)	1
18	C10L	21–5103	Dual seat front fixing bolt nut (1955)	1
19	C10L	2–923	Petrol tank rear fixing bolt washer (plain)	1
20	C10L	24–8784	Petrol tank rear fixing bolt washer (spring)	1
21	C10L	21–5103	Petrol tank rear fixing bolt nut	1
22	C10L	29–9395	Dual seat with brackets, bolts and nuts (carrier fixing)	1
—	C10L	29–9393	Set of dual seat loose fittings (carrier fixing)	1
23	C10L	65–8503	Twist grip rubber grip	1
24	C10L	90–8537	Twist grip rotor	1
25	C10L	90–8538	Twist grip body screw	3
26	C10L	90–8539	Twist grip friction spring	1
27	C10L	90–8540	Twist grip friction screw	1
28	C10L	90–8541	Twist grip friction screw locknut	1
29	C10L	90–8536	Twist grip body	1
30	C10L	90–8542	Twist grip cable stop	1
31	C10L	90–8533	Throttle twist grip	1
32	C10L	29–8764	Twist grip cable and cover complete	1
33	C10L	29–8812	Front brake control lever	1
34	C10L	29–8813	Front brake control lever screw	1
—	C10L	29–8818	Front brake control lever screw locking washer	1
—	C10L	29–8814	Front brake control lever screw nut	1
35	C10L	90–8506	Front brake control body ferrule	1
36	C10L	29–8840	Front brake cable and cover complete (1954/5)	1
36	C10L	29–8815	Front brake cable and cover complete (1956)	1
37	C10L	29–8835	Clutch control cable and cover complete (1954/5)	1
37	C10L	29–8844	Clutch control cable and cover complete (1956)	1
38	C10L	90–8506	Clutch control body ferrule	1
39	C10L	29–8813	Clutch control lever screw	1
—	C10L	29–8818	Clutch control lever screw locking washer	1
—	C10L	29–8814	Clutch control lever screw nut	1

Plate 22 PETROL TANK, HANDLEBAR, DUAL SEAT, BATTERY CARRIER

C10L

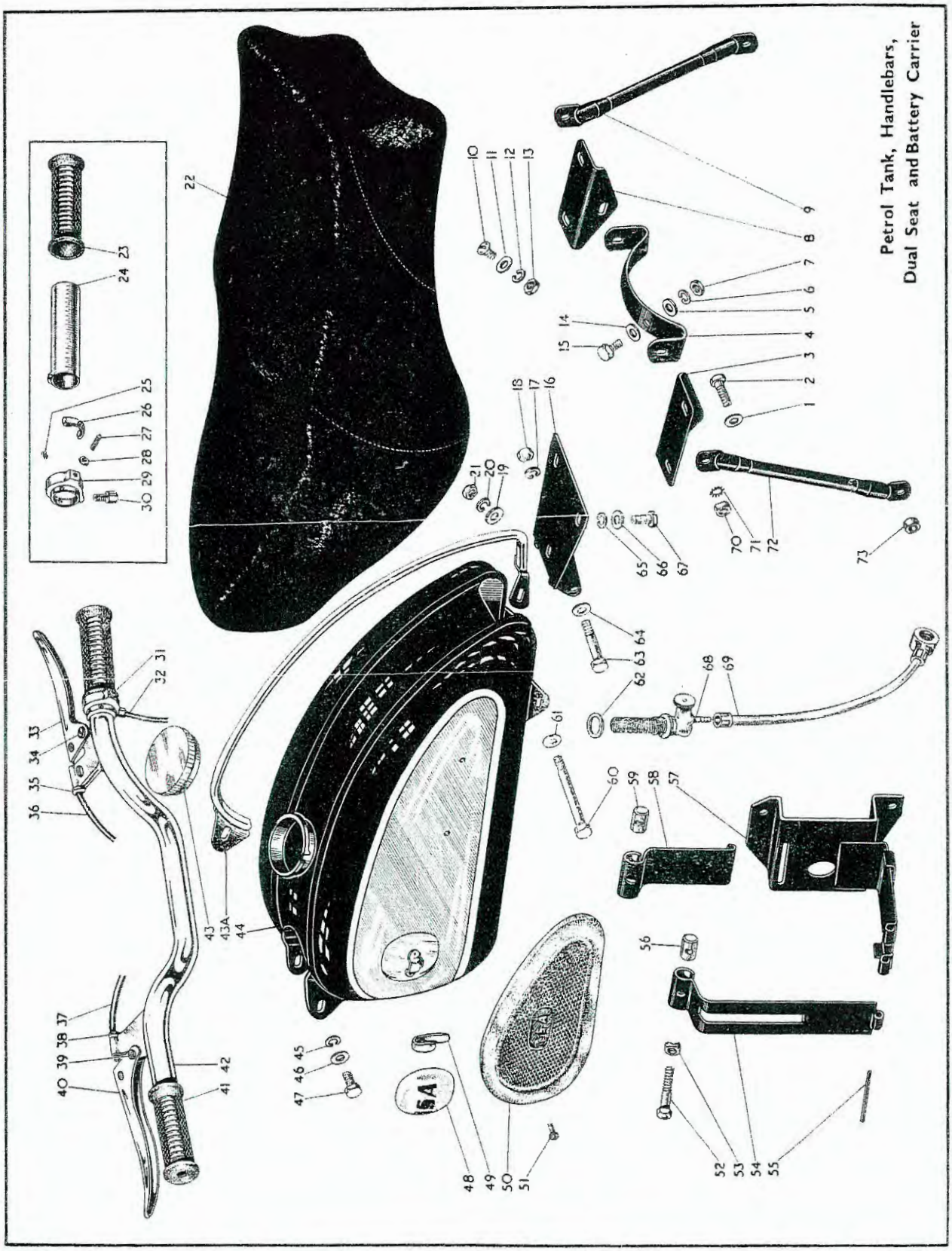

Plate 22—*continued* Petrol Tank, Handlebar, Dual Seat and Battery Carrier

C10L.

Plate Ref. Number.	Model.	Part No.	Description.	Number per set.
40	C10L	29–8832	Clutch control lever	1
41	C10L	65–3502	Dummy grip (left-hand bar)	1
42	C10L	90–4976	Handlebar complete (less controls) (1954/6)	1
42	C10L	29–8540	Handlebar (less controls) (1956)	1
43	C10L	29–7898	Petrol tank filler cap	1
43A	C10L	29–8150	Petrol tank beading complete (nearside)	1
43A	C10L	29–8151	Petrol tank beading complete (offside)	1
44	C10L	29–7798/58	Petrol tank	1
45	C10L	24–3784	Petrol tank front fixing bolt washer (spring)	2
46	C10L	2–923	Petrol tank front fixing bolt washer (plain)	2
47	C10L	21–5662	Petrol tank front fixing bolt	2
48	C10L	29–7820	Petrol tank badge	2
49	C10L	89–8012	Petrol tank badge clip	2
50	C10L	65–8206	Petrol tank knee grip complete (left-hand)	1
—	C10L	65–8205	Petrol tank knee grip complete (right-hand)	1
51	C10L	2–79	Petrol tank knee grip plate screw	4
—	C10L	29–4678	Battery carrier complete with fittings (1954/5)	1
—	C10L	29–4695	Battery carrier complete (1956)	1
52	C10L	29–4661	Battery carrier strap bolt	1
53	C10L	29–4662	Battery carrier strap bolt saddle washer	1
54	C10L	29–4685	Battery carrier strap	1
55	C10L	29–4664	Battery carrier strap hinge pin	1
56	C10L	65–2352	Battery carrier swivel block (plain)	1
57	C10L	29–4679	Battery carrier back with fixed fittings (1954/5)	1
57	C10L	29–4696	Battery carrier back with fixed fittings (1956)	1
58	C10L	29–4681	Battery carrier swivel block anchor strap (1954/5)	1
58	C10L	29–4698	Battery carrier swivel back anchor strap (1956)	1
59	C10L	65–2353	Battery carrier swivel block (tapped)	1
—	C10L	21–5668	Battery carrier securing bolt (1956)	3
—	C10L	24–8784	Battery carrier securing bolt washer (spring) (1956)	3
—	C10L	66–8348	Battery carrier distance piece (1956)	3
60	C10L	21–5466	Petrol tank rear fixing bolt (1954/5)	1
60	C10L	21–5676	Petrol tank rear fixing bolt (1956)	1
61	C10L	2–923	Petrol tank rear fixing bolt washer (plain)	1
62	C10L	24–8504	Petrol tap washer (fibre)	1
63	C10L	21–5461	Dual seat front fixing bolt (1955)	1
63	C10L	21–5671	Dual seat front fixing bolt (1956)	1
64	C10L	2–923	Dual seat front fixing bolt washer (plain)	1
65	C10L	35–33	Dual seat fixing bolt washer (spring)	7
66	C10L	2–923	Dual seat fixing bolt washer (plain) (1954)	7
67	C10L	2–129	Dual seat fixing bolt (1954)	7
68	C10L	29–7765	Petrol tap with pipe complete	1
69	C10L	*29–7805	Petrol pipe (plastic) (1954)	1
70	C10L	21–5103	Dual seat stay bolt nut (1954)	2
71	C10L	36–382	Dual seat stay bolt washer (shakeproof) (1954)	2
72	C10L	29–9386	Dual seat stay complete (nearside) (1954)	1
73	C10L	66–8347	Dual seat nearside stay distance piece (1954)	2

* Supplied only as petrol tap with pipe complete 29–7765

Plate 23 MUDGUARDS, OIL TANK, TOOLBOX, CHAINGUARD and SILENCER

C10L

Plate Ref. Number.	Model.	Part No.	Description.	Number per set.
1	C10L	21–5453	Rear chainguard securing bolt (1954/5)	1
1	C10L	21–5663	Rear chainguard bolt (1956)	1
2	C10L	2–923	Rear chainguard securing bolt washer (plain)	1
3	C10L	24–8784	Rear chainguard securing bolt washer (spring)	1
4	C10L	29–8335	Rear chainguard	1
5	C10L	65–8422	Oil return pipe connection ferrule	1
6	C10L	66–8332	Oil return pipe nut	1
7	C10L	29–8141	Oil tank and crankcase return pipe complete	1
8	C10L	29–8141	Oil tank and crankcase feed pipe complete	1

Plate 23—*continued* Mudguards, Oil Tank, Toolbox, Chainguard and Silencer

C10L

Plate Ref. Number.	Model.	Part No.	Description.	Number per set.
9	C10L	66–8332	Oil feed pipe nut	2
10	C10L	65–8422	Oil feed pipe connection ferrule	1
11	C10L	65–2060	Oil feed pipe connection (rubber)	1
12	C10L	65–8422	Oil feed pipe connection ferrule	1
13	C10L	65–2060	Oil return pipe connection (rubber)	1
14	C10L	65–8422	Oil return pipe connection ferrule	1
15	C10L	66–8332	Oil return pipe nut	2
16	C10L	29–8137	Oil return pipe complete (1954/5)	1
17	C10L	29–8139	Oil tank feed pipe complete (1954/5)	1
17	C10L	29–8348	Oil feed and return pipe complete (1956)	2
18	C10L	29–7971	Oil feed pipe banjo union washer (fibre) (1954/5)	1
19	C10L	29–7962	Oil tank filter complete (1954/5)	1
19	C10L	42–8334	Oil tank filter assembly (1956)	1
—	C10L	42–8343	Oil tank filter plug washer (fibre) (1956)	1
20	C10L	29–7971	Oil feed pipe banjo union washer (fibre) (1954/5)	1
21	C10L	21–5401	Front mudguard to stay bolt (1954/5)	2
22	C10L	27–8560	Front mudguard to stay bolt washer (plain) (1954/5)	2
23	C10L	90–6531	Front mudguard stay (rear) (1954/5)	2
24	C10L	90–6528	Front mudguard loop stay complete (1954/5)	2
25	C10L	21–5102	Loop stay to fork bolt nut (1954/5)	1
26	C10L	2–1462	Loop stay to fork bolt washer (spring) (1954/5)	4
27	C10L	27–8560	Loop stay to fork bolt washer (plain) (1954/5)	4
28	C10L	21–5403	Loop stay to fork bolt (1954/5)	4
28	C10L	15–7354	Front mudguard stays to fork end bolt (1956)	4
—	C10L	2–1616	Front mudguard stays to fork end bolt nut (1956)	4
—	C10L	2–923	Front mudguard stays to fork end washer (plain) (1956)	4
—	C10L	24–8784	Front mudguard stays to fork end washer (spring) (1956)	5
29	C10L	27–8560	Front mudguard stay fixing bolt washer (plain)	4
30	C10L	21–5401	Front mudguard stay bottom fixing bolt (1954/5)	2
31	C10L	29–541	Front mudguard stay bottom fixing bolt washer (shakeproof) (1954/5).	2
32	C10L	21–5102	Front mudguard stay bottom fixing bolt nut (1954/5)	2
—	C10L	29–6574	Front mudguard support bridge (1956)	1
—	C10L	21–5611	Front mudguard to support bridge bolt (1956)	2
—	C10L	21–5202	Front mudguard to support bridge bolt nut (1956)	2
—	C10L	27–8560	Front mudguard to support bridge bolt washer (plain) (1956)	4
—	C10L	2–1462	Front mudguard to support bridge bolt washer (spring) (1956)	2
33	C10L	27–8560	Mudguard to loop stay fixing bolt washer (plain) (1954/5)	2
34	C10L	21–5401	Mudguard to loop stay fixing bolt (1954/5)	2
35	C10L	2–2395	Front number plate stud nut	2
—	C10L	27–8560	Front number plate fixing stud washer (plain)	2
36	C10L	2–1462	Front number plate stud washer (spring)	2
37	C10L	27–8560	Mudguard to stay fixing bolt washer (plain)	2
38	C10L	21–5401	Mudguard to stay fixing bolt (1954/5)	2
38	C10L	21–5611	Mudguard to stay fixing bolt (1956)	4
—	C10L	2–1462	Mudguard to stay fixing bolt washer (spring) (1956)	4
39	C10L	90–6530	Front mudguard stay (front) (1954/5)	2
—	C10L	29–6573	Front mudguard stay (1956)	4
40	C10L	90–6527	Front mudguard	1
41	C10L	65–6576	Front number plate complete	1
42	C10L	27–8560	Front mudguard to stay fixing bolt washer (plain)	2
43	C10L	29–541	Front mudguard to stay fixing bolt washer (shakeproof) (1954/5)	2
44	C10L	21–5202	Front mudguard to stay fixing bolt nut	2
45	C10L	21–5202	Loop stay to mudguard fixing bolt nut (1954/5)	2
—	C10L	28–2338	Front mudguard to fork bolt (1956)	4
—	C10L	2–49	Front mudguard to fork bolt nut (1956)	4
—	C10L	24–8784	Front mudguard to fork bolt washer (spring)	4
46	C10L	29–541	Loop stay to mudguard fixing bolt washer (shakeproof) (1954/5)	2
47	C10L	27–8560	Loop stay to mudguard fixing bolt washer (plain) (1954/5)	2
48	C10L	27–8560	Front mudguard to stay bolt washer (plain)	2
49	C10L	29–541	Front mudguard to stay bolt washer (shakeproof) (1954/5)	2
50	C10L	21–5202	Front mudguard to stay bolt nut	2
51	C10L	21–5103	Rear mudguard fixing stud nut	2
52	C10L	36–382	Rear mudguard fixing stud washer (shakeproof)	2
53	C10L	90–6793	Rear mudguard fixing stud	1
54	C10L	2–84	Oil tank drain plug	1
55	C10L	2–100	Oil tank drain plug washer (fibre)	1
56	C10L	29–8129	Oil tank with fixed fittings (1954/5)	1
56	C10L	29–8341	Oil tank with fixed fittings (1956)	1
57	C10L	67–42	Oil tank filler cap washer (fibre)	1
58	C10L	65–8500	Oil tank filler cap	1

Plate 23 MUDGUARDS, OIL TANK, TOOLBOX, CHAINGUARD, SILENCER

C10L

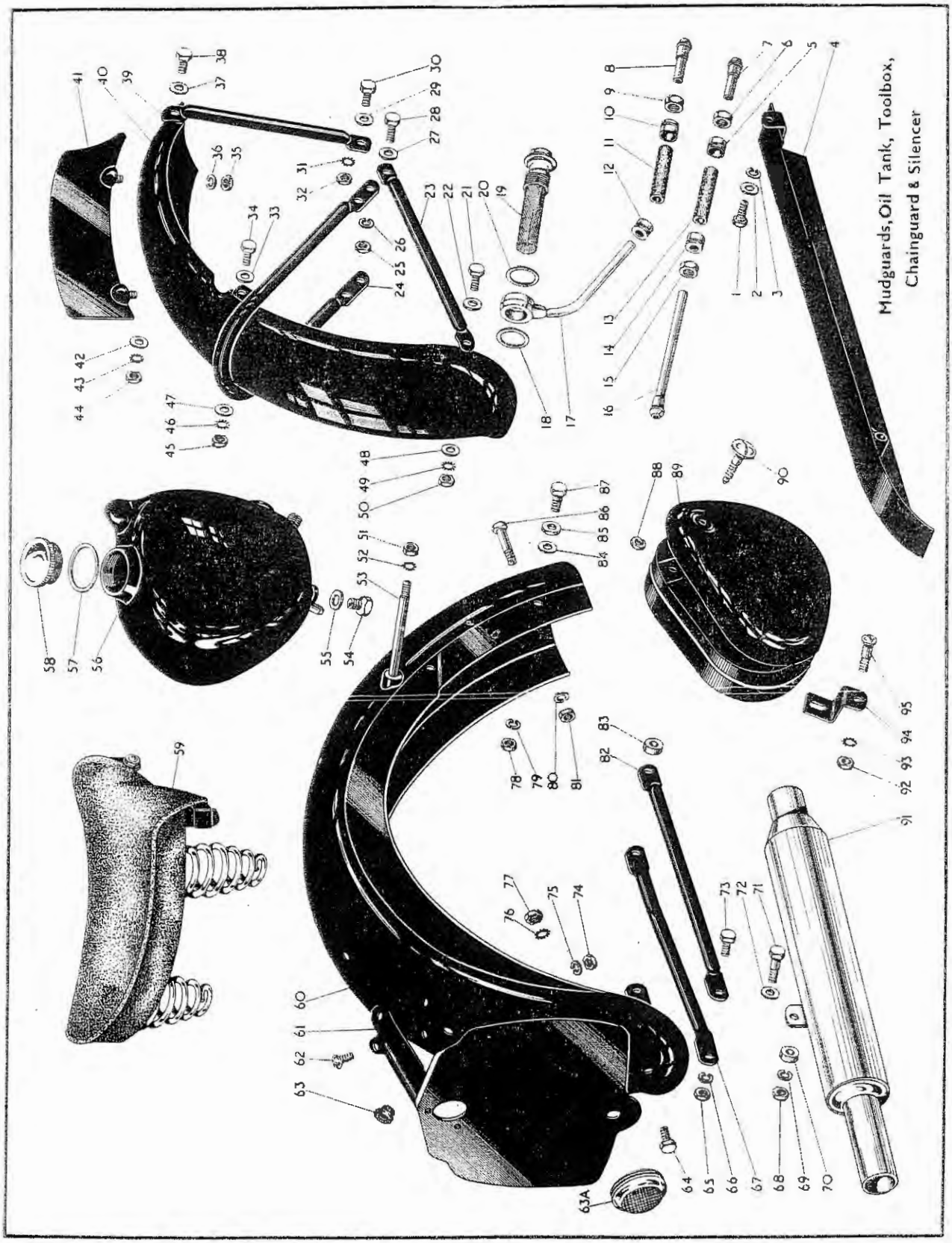

Petrol Tank Handlebar Battery Carrier and Dual Seat
ear Mudguard Chainguards ear Brake Rod Silencer
Prop Stand Mudguards Oil Tank Toolbox and Chainguard
Tools and Sundries
Legshields and Bumper Bars
Electrical Equipment
Numerical Index

Plate 23—*continued* Mudguards, Oil Tank, Toolbox, Chainguard and Silencer

C10L

Plate Ref. Number	Model	Part No.	Description	Number per set.
59	C10L	29-9312	Saddle	1
60	C10L	29-6830	Rear mudguard with fixed fittings (1955/6)	1
60	C10L	29-6812	Rear mudguard with fixed fittings (1954)	1
60	C10L	29-6812	Rear mudguard with fixed fittings (when dual seat is fitted)	1
61	C10L	90-6839	Rear number plate (1955/6)	1
61	C10L	90-6794	Rear number plate (1954)	1
62	C10L	21-6173	Rear number plate fixing screw (tap)	2
63	C10L	67-6839	Rear mudguard wiring grommet	2
63A	C10L	67-9069	Reflector (1955/6)	1
63A	C10L	67-9067	Reflector (1954)	1
64	C10L	21-5401	Rear number plate bottom fixing bolt (1954/5)	1
64	C10L	21-5611	Rear number plate bottom fixing bolt (1956)	1
65	C10L	21-5102	Rear mudguard stay rear fixing bolt nut	2
66	C10L	2-1462	Rear mudguard stay rear fixing bolt washer (spring)	2
67	C10L	90-6783	Rear mudguard bottom stay (nearside)	1
68	C10L	24-563	Silencer support bolt nut (1954/5)	1
68	C10L	21-5103	Silencer support bolt nut (1956)	1
69	C10L	24-8784	Silencer support bolt washer (spring)	1
70	C10L	66-8348	Silencer support bolt distance piece (1954/5)	1
71	C10L	15-518	Silencer support bolt (1954/5)	1
71	C10L	21-5668	Silencer support bolt (1956)	1
72	C10L	2-923	Silencer support bolt washer (plain)	1
73	C10L	21-5401	Rear mudguard stay fixing bolt (rear) (1954/5)	2
73	C10L	21-5611	Rear mudguard stay fixing bolt (rear) (1956)	2
74	C10L	21-5102	Rear number plate top fixing screw nut	2
75	C10L	2-1462	Rear number plate top fixing washer (spring)	2
76	C10L	29-541	Reflector stud washer	1
77	C10L	21-5102	Reflector stud nut	1
78	C10L	21-5102	Toolbox fixing bolt nut (1954/5)	3
78	C10L	21-5102	Toolbox securing screw nut (1956)	2
79	C10L	2-1462	Toolbox fixing bolt washer (spring) (1954/5)	3
79	C10L	2-1462	Toolbox securing screw washer (1956)	2
80	C10L	2-923	Rear mudguard front fixing bolt washer (spring)	1
81	C10L	21-5102	Rear mudguard front fixing bolt nut	1
82	C10L	90-6784	Rear mudguard bottom stay (offside)	1
83	C10L	66-8347	Rear mudguard stay distance piece	2
84	C10L	27-8560	Toolbox fixing bolt washer (plain) (1954/5)	3
84	C10L	27-8560	Toolbox fixing bolt washer (plain) (1956)	2
85	C10L	2-370	Toolbox fixing bolt spacing washer	2
86	C10L	21-5409	Rear mudguard front fixing bolt (1954/5)	1
86	C10L	21-5619	Rear mudguard front fixing bolt (1956)	1
87	C10L	21-5612	Toolbox fixing bolt (1954/5)	3
87	C10L	21-5612	Toolbox securing screw (1956)	2
88	C10L	2-1027	Toolbox lid fixing screw nut (1954/5)	1
89	C10L	29-9164	Toolbox complete (1954/5)	1
89	C10L	29-9175	Toolbox complete (1956)	1
90	C10L	29-9132	Toolbox lid fixing screw complete (1954/5)	1
91	C10L	29-1925	Silencer complete (1954/5)	1
91	C10L	29-3010	Silencer complete (1956)	1
92	C10L	2-49	Toolbox bracket fixing bolt nut (not required when pillion footrest fitted) (1954/5).	1
93	C10L	36-382	Toolbox bracket fixing bolt washer (shakeproof) (not required when pillion footrest fitted) (1954/5).	1
94	C10L	29-9166	Toolbox bracket (1954/5)	1
95	C10L	2-2980	Toolbox bracket fixing screw (1954/5)	1
—	C10L	21-5668	Toolbox bracket fixing bolt (1956)	1
—	C10L	21-5103	Toolbox bracket fixing bolt nut (1956)	1
—	C10L	24-8784	Toolbox bracket fixing bolt washer (spring) (1956)	1
—	C10L	2-923	Toolbox bracket fixing bolt washer (plain) (1956)	1

Plate 24 MUDGUARDS, OIL TANK, TOOLBOX, CHAINGUARD and SILENCER

C11G (Rigid and Spring)

Plate Ref. Number	Model	Part No.	Description	Number per set.
1	C11G Rigid	29–8325	Rear chainguard complete	1
2	C11G Rigid and Spring	2–129	Rear chainguard strap bolt (top)	1
3	C11G Rigid and Spring	36–382	Rear chainguard strap bolt washer (shakeproof)	1
4	C11G Rigid and Spring	2–49	Rear chainguard strap bolt nut	1
5	C11G Rigid and Spring	66–8332	Oil feed pipe union nut	1
6	C11G Rigid and Spring	29–7990	Oil feed pipe complete (crankcase)	1
7	C11G Rigid and Spring	66–8332	Oil return pipe union nut	1
8	C11G Rigid and Spring	29–7996	Oil return pipe complete (crankcase)	1
9	C11G Rigid and Spring	65–8422	Oil return pipe connection ferrule	1
10	C11G Rigid and Spring	65–2060	Oil return pipe connection (rubber)	1
11	C11G Rigid and Spring	65–8422	Oil return pipe connection ferrule	1
12	C11G Rigid and Spring	66–8332	Oil return pipe union nut	1
13	C11G Rigid and Spring	29–7998	Oil return pipe complete (oil tank)	1
14	C11G Rigid and Spring	29–6565	Front mudguard bottom stay	1
15	C11G Rigid and Spring	15–7354	Front mudguard stay centre fixing bolt	4
16	C11G Rigid and Spring	24–8784	Front mudguard stay centre fixing bolt washer (spring)	4
17	C11G Rigid and Spring	2–1616	Front mudguard stay centre fixing bolt nut	4
18	C11G Rigid and Spring	2–2395	Front mudguard support bridge fixing bolt nut	2
19	C11G Rigid and Spring	2–1462	Front mudguard support bridge fixing bolt washer (spring)	2
20	C11G Rigid and Spring	66–7518	Front mudguard support bridge fixing bolt washer (fibre)	2
21	C11G Rigid and Spring	2–49	Front mudguard support bridge fork fixing bolt nut	4
22	C11G Rigid and Spring	36–382	Front mudguard support bridge fork fixing bolt washer (shakeproof)	4
23	C11G Rigid and Spring	29–6554	Front mudguard support bridge	1
24	C11G Rigid and Spring	2–1462	Front number plate stud washer (spring)	2
25	C11G Rigid and Spring	2–2395	Front number plate stud nut	2
26	C11G Rigid and Spring	28–2338	Front mudguard support bridge fork fixing bolt	4
27	C11G Rigid and Spring	2–1462	Front mudguard top and bottom stay fixing screw washer (spring)	4
28	C11G Rigid and Spring	2–2395	Front mudguard top and bottom stay fixing screw nut	4
29	C11G Rigid and Spring	29–6565	Front mudguard top stay	1
30	C11G Rigid and Spring	27–8560	Front mudguard top and bottom stay fixing screw washer (plain)	4
31	C11G Rigid and Spring	15–7161	Front mudguard top and bottom stay fixing screw	4
32	C11G Rigid and Spring	65–6576	Front number plate complete	1
33	C11G Rigid and Spring	29–6564	Front mudguard complete with fixed fittings	1
33	C11G Spring	29–6570	Front mudguard with fixed fittings (1955)	1
34	C11G Rigid and Spring	15–7161	Front mudguard support bridge fixing bolt	2
35	C11G Rigid and Spring	27–8560	Front mudguard support bridge fixing bolt washer (plain)	2
36	C11G Rigid and Spring	65–8500	Oil tank filler cap	1
37	C11G Rigid and Spring	67–42	Oil tank filler cap washer (fibre)	1
38	C11G Rigid and Spring	29–7981	Oil tank complete with fixed fittings	1
39	C11G Rigid	2–1354	Toolbox and mudguard fixing bolt (front)	2
40	C11G Rigid	2–370	Toolbox and mudguard fixing bolt spacing washer	2
41	C11G Rigid	15–7161	Rear mudguard front stay fixing screw (used only when pillion seat is fitted)	2
42	C11G Rigid	29–6815	Rear mudguard complete with fixed fittings	1
43	C11G Rigid	2–1462	Rear mudguard front stay fixing screw washer (spring) (used only when pillion seat is fitted)	2
44	C11G Rigid	2–2395	Rear mudguard front stay fixing screw nut (used only when pillion seat is fitted)	2
45	C11G Rigid and Spring	29–9314	Saddle	1
46	C11G Rigid and Spring	67–6851	Rear number plate rubber extrusion	1
47	C11G Rigid and Spring	67–6830	Rear number plate complete (with small hole for reflector)	1
—	C11G Spring	67–9067	Reflector (1954)	1
—	C11G Spring	67–9069	Reflector (1955)	1
—	C11G Spring	21–5102	Rear reflector nut (1955)	1
—	C11G Spring	29–541	Rear reflector nut washer (1955)	1
48	C11G Rigid	29–6897	Rear mudguard lifting handle and stay complete	1
49	C11G Rigid	2–2395	Rear mudguard lifting handle and stay top bolt nut	2
50	C11G Rigid	2–1462	Rear mudguard lifting handle and stay top bolt washer (spring)	2
51	C11G Rigid	27–8560	Rear mudguard lifting handle and stay top bolt washer (plain)	2
52	C11G Rigid	2–204	Rear mudguard bottom stay bolt	2
53	C11G Rigid	29–6871	Rear mudguard bottom stay (right-hand)	1
54	C11G Rigid	15–447	Rear mudguard bottom stay bolt nut	2
55	C11G Rigid	2–803	Silencer and toolbox bracket fixing bolt	1
56	C11G Rigid	2–46	Silencer and toolbox bracket fixing bolt nut	1
57	C11G Rigid	15–7161	Toolbox and chainstay bracket bolt (rear)	1
58	C11G Rigid	29–9140	Toolbox fixing bracket	1
59	C11G Rigid	2–525	Toolbox and chainstay bracket bolt washer (plain)	1
60	C11G Rigid	29–541	Toolbox and chainstay bracket bolt washer (shakeproof)	1
61	C11G Rigid	2–2395	Toolbox and chainstay braacket bolt nut	1
62	C11G Rigid and Spring	29–541	Rear number plate fixing bolt washer (shakeproof)	4
—	C11G Spring	2–1462	Rear number plate fixing bolt washer (1955)	4

Plate 24 MUDGUARDS, OIL TANK, TOOLBOX, CHAINGUARD, SILENCER

C11G (Rigid and Spring)

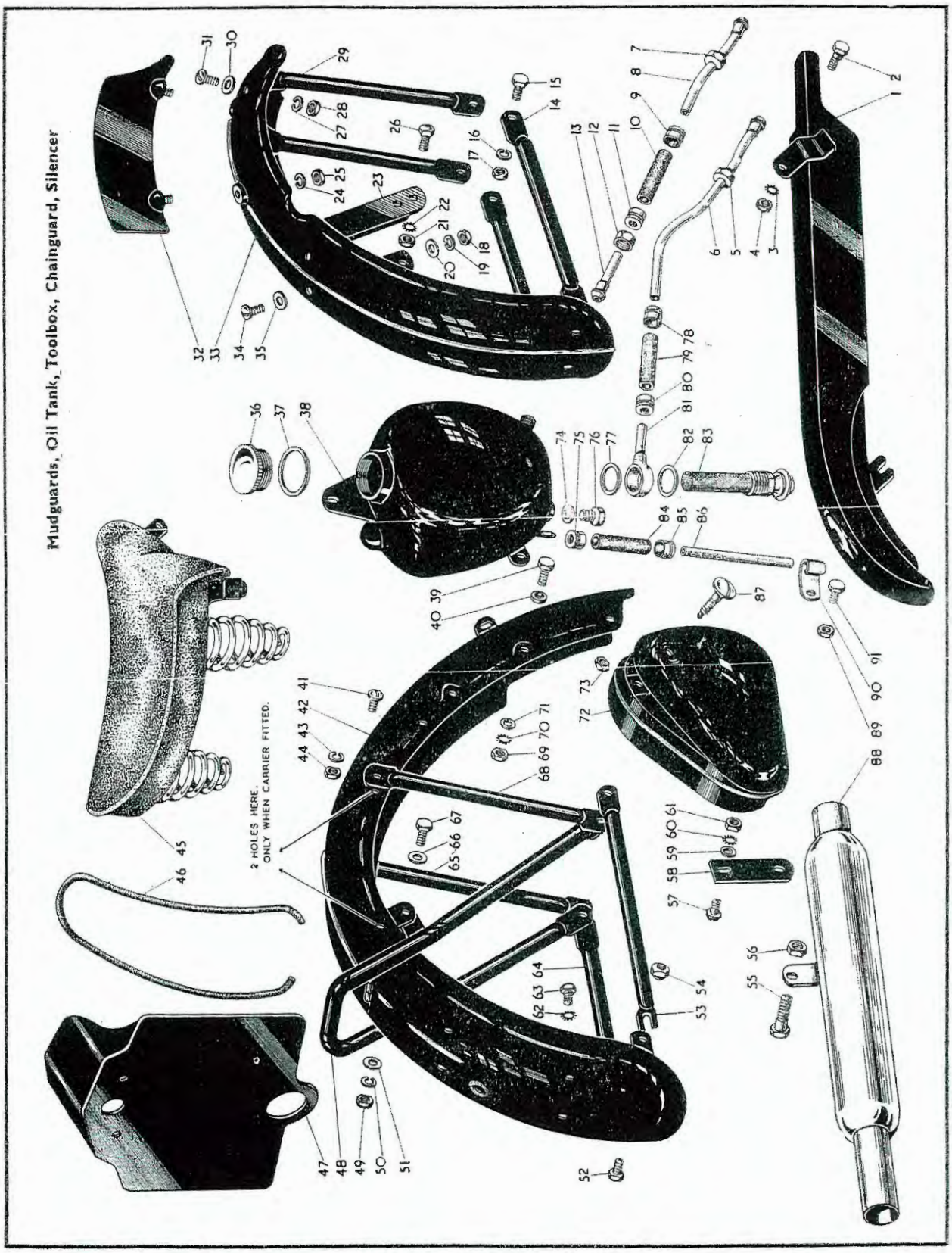

Plate 24—*continued* Mudguards, Oil Tank, Toolbox, Chainguard, and Silencer

C11G (Rigid and Spring)

Plate Ref. Number.	Model	Part No	Description	Number per set.
63	C11G Rigid and Spring	2-220	Rear number plate fixing bolt	4
—	C11G Spring	27-8560	Rear number plate fixing bolt washer (plain) (1955)	4
64	C11G Rigid	29-6882	Rear mudguard bottom stay (left-hand)	1
65	C11G Rigid	29-6883	Rear mudguard front stay (left-hand) (used only when pillion seat is fitted)	1
66	C11G Rigid	27-8560	Rear mudguard lifting handle and stay top bolt washer (plain)	2
67	C11G Rigid	2-1354	Rear mudguard lifting handle and stay top bolt	2
68	C11G Rigid	29-6875	Rear mudguard front stay (right-hand) (used only when pillion seat is fitted)	1
69	C11G Rigid	2-2395	Toolbox and mudguard fixing bolt nut	2
70	C11G Rigid	29-541	Toolbox and mudguard fixing bolt washer (shakeproof)	2
71	C11G Rigid	2-525	Toolbox and mudguard fixing bolt washer (plain)	2
72	C11G Rigid and Spring	29-9161	Toolbox complete	1
73	C11G Rigid and Spring	2-1027	Toolbox lid fixing screw nut	1
74	C11G Rigid and Spring	2-100	Oil tank drain plug washer	1
75	C11G Rigid and Spring	65-8422	Oil tank breather pipe connection ferrule	1
76	C11G Rigid and Spring	2-84	Oil tank drain plug	1
77	C11G Rigid and Spring	29-7971	Oil tank feed pipe banjo union washer	1
78	C11G Rigid and Spring	65-8422	Oil tank feed pipe connection ferrule	1
79	C11G Rigid and Spring	65-2060	Oil tank feed pipe connection (rubber)	1
80	C11G Rigid and Spring	65-8422	Oil tank feed pipe connection ferrule	1
81	C11G Rigid and Spring	29-7994	Oil tank feed pipe complete (oil tank)	1
82	C11G Rigid and Spring	29-7971	Oil tank feed pipe banjo union washer	1
83	C11G Rigid and Spring	29-7962	Oil tank filter complete	1
84	C11G Rigid and Spring	65-2060	Oil tank breather pipe connection	1
85	C11G Rigid and Spring	65-8422	Oil tank breather pipe connection ferrule	1
86	C11G Rigid and Spring	29-7949	Oil tank breather pipe extension	1
87	C11G Rigid and Spring	29-9132	Toolbox lid fixing screw complete	1
88	C11G Rigid	29-2975	Silencer complete	1
89	C11G Rigid and Spring	2-2395	Oil tank breather pipe clip bolt nut	1
90	C11G Rigid and Spring	66-8340	Oil tank breather pipe clip	1
91	C11G Rigid and Spring	2-204	Oil tank breather pipe clip bolt	1

Plate 25 PETROL TANK, HANDLEBAR, BATTERY CARRIER and DUAL SEAT

C11G, C12

Plate Ref. Number.	Model.	Part No.	Description.	Number per set.
1	C11G	15-7563	Lifting handle distance piece	1
2	C11G	29-6911	Lifting handle complete	1
3	C11G	29-9374	Dual seat support bracket (nearside) (1954/5)	1
4	C11G	36-382	Dual seat rear support stay fixing bolt washer (shakeproof) (1954/5)	2
5	C11G	2-49	Dual seat rear support stay fixing bolt nut (1954/5)	2
6	C11G	29-9373	Dual seat rear support bracket (offside) (1954/5)	1
7	C11G	2-923	Dual seat rear support bracket fixing bolt washer (plain)	2
8	C11G	2-1934	Dual seat rear support stay fixing bolt (1954/5)	2
9	C11G	29-9388	Dual seat front fixing distance piece (1954/5)	3
10	C11G	35-33	Dual seat base fixing bolt washer (spring) (1954/5)	7
11	C11G	2-923	Dual seat base fixing bolt washer (plain) (1954/5)	7
12	C11G	2-129	Dual seat base fixing bolt (rear) (1954/5)	4
12	C12	42-9061	Dual seat rear support bolt (1956)	2
13	C11G	29-9361	Dual seat front support bracket complete (1954/5)	1
13	C12	29-9405	Dual seat front support bracket (1956)	1
14	C11G	2-49	Dual seat front fixing bolt nut (1954/5)	1
15	C11G	36-382	Dual seat front fixing bolt washer (shakeproof)) (1954/5)	1
16	C11G	33-4089	Dual seat front fixing bolt (1954/5)	1
16	C12	28-2338	Dual seat front support bolt (1956)	1
16	C11G	15-1355	Dual seat front fixing bolt (1955)	3
17	C11G, C12	2-2395	Petrol tank beading fixing bolt nut (rear)	2
18	C11G, C12	2-1462	Petrol tank beading fixing bolt washer (spring)	2
18A	C11G, C12	27-8560	Petrol tank beading fixing bolt washer (plain)	2
19	C11G, C12	2-204	Petrol tank beading fixing bolt (rear)	2
—	C12	29-9429	Twin seat handrail complete (1956)	1
—	C12	24-6770	Handrail mudguard bolt (1956)	4
—	C12	2-49	Handrail mudguard bolt nut (1956)	4
—	C12	2-923	Handrail mudguard bolt washer (plain)	8
—	C12	36-382	Handrail mudguard bolt washer (shakeproof)	4

Plate 25 PETROL TANK, HANDLEBAR, BATTERY CARRIER and DUAL SEAT

C11G, C12

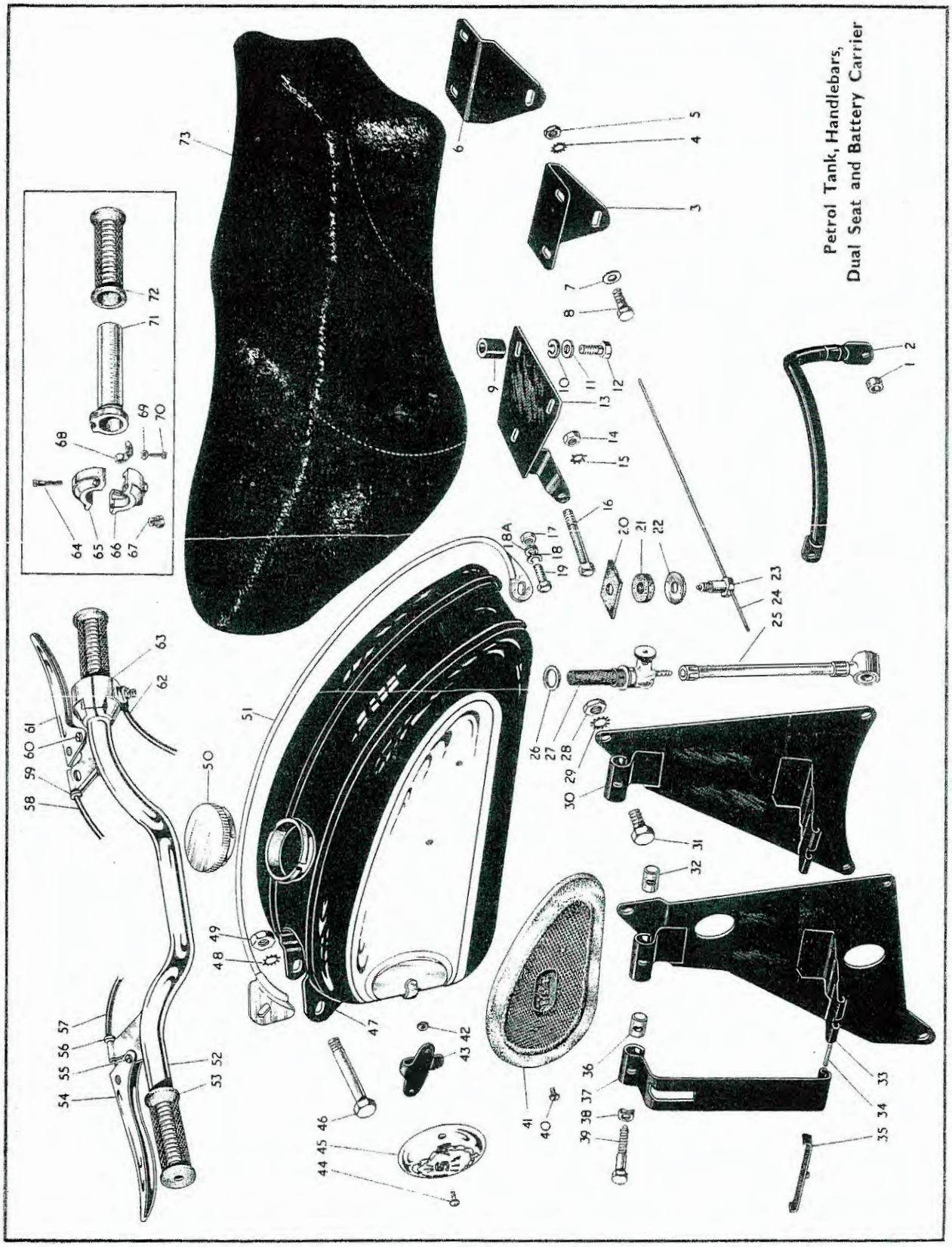

Petrol Tank, Handlebar, Battery Carrier and Dual Seat

C11G, C12

Plate Ref. Number	Model	Part No.	Description	Number per set.
20	C11G, C12	29–7817	Petrol tank rear fixing bolt support rubber (top)	2
21	C11G, C12	65–8033	Petrol tank rear fixing bolt support rubber (bottom)	2
22	C11G, C12	30–660	Petrol tank rear fixing bolt washer	2
23	C11G, C12	65–8034	Petrol tank rear fixing bolt	2
24	C11G, C12	65–8038	Petrol tank rear fixing bolt wire	1
25	C11G, C12	29–7764	Petrol pipe complete with tap	1
26	C11G, C12	24–8504	Petrol tap washer (fibre)	1
28	C11G	2–46	Battery carrier front fixing bolt nut	1
29	C11G	66–4707	Battery carrier front fixing bolt washer (shakeproof) (4-speed gearbox)	1
				1
—	C11G	29–4675	Battery carrier complete (3-speed gearbox)	1
—	C11G	29–4670	Battery carrier complete (4-speed gearbox)	1
30	C11G	29–4671	Battery bracket complete (4-speed gearbox)	1
31	C11G	65–5663	Battery carrier front fixing bolt (4-speed gearbox)	1
32	C11G	65–2353	Battery carrier swivel block (tapped)	1
33	C11G	29–4676	Battery bracket complete (3-speed gearbox)	1
34	C11G	29–4664	Battery carrier strap hinge pin	1
35	C11G	29–4665	Battery locating strip complete	1
36	C11G	65–2352	Battery carrier swivel block (plain)	1
37	C11G	29–4657	Battery carrier strap	1
38	C11G	29–4662	Battery carrier strap bolt saddle washer	1
39	C11G	29–4661	Battery carrier strap bolt	4
40	C11G, C12	2–79	Petrol tank knee grip plate screw	4
41	C11G, C12	65–8206	Petrol tank knee grip complete (left-hand)	1
41	C11G, C12	65–8205	Petrol tank knee grip (right-hand)	1
42	C11G, C12	42–8034	Petrol tank badge clip screw nut	4
43	C11G, C12	42–8020	Petrol tank badge clip	2
44	C11G, C12	65–8317	Petrol tank badge clip screw	4
45	C11G, C12	65–8220	Petrol tank badge	1
46	C11G, C12	67–8076	Petrol tank front support bolt	1
47	C11G	29–7802/36	Petrol tank	1
47	C12	29–7802/72	Petrol tank	1
48	C11G, C12	66–4707	Petrol tank front support bolt washer (shakeproof)	1
49	C11G, C12	2–46	Petrol tank front support bolt nut	1
50	C11G, C12	29–7898	Petrol tank filler cap	1
51	C11G, C12	29–8157	Petrol tank beading (offside)	1
51	C11G, C12	29–8158	Petrol tank beading (nearside)	1
52	C11G	90–4976	Handlebar complete less controls	1
53	C11G, C12	65–8502	Dummy grip (left-hand bar)	1
54	C11G, C12	29–8832	Clutch control lever	1
—	C11G, C12	29–8814	Clutch control fixing screw nut	1
—	C11G, C12	29–8818	Clutch control fixing screw washer	1
55	C11G, C12	29–8813	Clutch control lever fixing screw	1
56	C11G, C12	90–8506	Clutch control body ferrule	1
57	C11G	29–8827	Clutch control cable and cover complete (3-speed gearbox)	1
57	C11G	67–3681	Clutch control cable and cover complete (4-speed gearbox)	1
57	C12	29–8852	Clutch control cable and cover complete	1
—	C11G, C12	29–8818	Front brake lever fixing screw washer	1
—	C11G, C12	29–8814	Front brake lever fixing screw nut	1
58	C11G, C12	29–8815	Front brake cable and cover complete	1
59	C11G, C12	90–8506	Front brake control body ferrule	1
60	C11G, C12	29–8813	Front brake control lever fixing screw	1
61	C11G, C12	29–8812	Front brake control lever	1
62	C11G, C12	29–8760	Throttle twist grip cable and cover complete	1
63	C11G, C12	65–8501	Trottle twist grip	2
64	C11G, C12	24–9573	Twist grip body screw	1
65	C11G, C12	65–8505	Twist grip body (top half)	1
66	C11G, C12	65–8506	Twist grip body (bottom half)	1
67	C11G, C12	24–9572	Twist grip cable stop	1
68	C11G, C12	24–9569	Twist grip friction spring	1
69	C11G, C12	24–9571	Twist grip friction screw locknut	1
70	C11G, C12	24–9570	Twist grip friction screw	1
71	C11G, C12	65–8504	Twist grip and rotor and rotor sleeve complete	1
72	C11G, C12	65–8503	Twist grip rubber grip	1
73	C11G Rigid	29–9397	Dual seat complete with fittings (1954/5)	1
73	C11G Spring	29–9390	Dual seat complete with fittings (1954/5)	1
73	C12	29–9435	Dual seat complete with fittings (1956)	1
—	C12	29–9436	Set of dual seat loose fittings only (1956)	1
—	C11G Rigid	29–9368	Dual seat rear support stay (nearside) (1954)	1
—	C11G Rigid	29–9367	Dual seat rear support stay (offside) (1954)	1
—	C11G Rigid	2–1462	Dual seat rear support fixing bolt washer (1954)	2

Plate 25—*continued* Petrol Tank, Handlebar, Battery Carrier and Dual Seat

C11G

Plate Ref. Number	Model	Part No.	Description	Number per set.
—	C12	29-9406	Dual seat front support pin (1956)	1
—	C12	15-645	Dual seat front support pin bolt (1956)	1
—	C12	90-9164	Dual seat support rubber (1956)	2
—	C12	29-9408	Dual seat support rubber bolt (1956)	2
—	C12	2-49	Dual seat support rubber bolt nut (1956)	4
—	C12	3-101	Dual seat support rubber bolt washer (plain) (1956)	2
—	C12	2-923	Dual seat support rubber bolt washer (plain) (1956)	2
—	C11G Rigid	2-2395	Dual seat rear support fixing bolt nut (1954)	2
—	C11G Rigid	2-204	Dual seat rear support strap fixing bolt (1954)	2
—	C11G Rigid	27-8560	Dual seat rear support strap fixing bolt washer (1954)	2
—	C11G Rigid	29-9366	Dual seat rear support strap (1954)	1
—	C11G Rigid	2-129	Dual seat base fixing bolt (1954)	7

Plate 26 REAR MUDGUARD, CHAINGUARD, REAR BRAKE ROD, SILENCER

C10L C11G

Plate Ref. Number.	Model.	Part No.	Description.	Number per set.
1	C10L	90-7006	Rear brake rod adjuster ferrule	1
1	C11G	29-7368	Rear brake rod adjuster ferrule	1
2	C10L, C11G	65-6274	Rear brake rod swivel pin	1
3	C10L, C11G	15-1312	Rear brake rod spring	1
—	C11G Rigid	29-7328	Rear brake rod toggle bush	1
5	C10L	21-5102	Rear brake rod spring adjusting nut	1
5	C11G	2-2395	Rear brake rod spring adjusting nut	1
6	C11G	2-443	Rear brake rod toggle end screw nut	1
7	C11G	29-7365	Rear brake rod	1
8	C11G	2-510	Rear brake rod toggle end screw	1
9	C11G	2-129	Rear chainguard strap top bolt	1
10	C11G	36-382	Rear chainguard strap top bolt washer (shakeproof)	1
11	C11G	2-49	Rear chainguard strap top bolt nut	1
12	C11G	29-8330	Rear chainguard complete	1
12	C11G Rigid	29-8325	Rear chainguard complete (1954)	1
13	C11G	2-49	Rear chainguard bottom strap bolt nut	1
14	C11G	36-382	Rear chainguard bottom strap bolt washer (shakeproof)	1
15	C11G	66-8347	Rear chainguard bottom strap bolt distance piece	1
16	C11G	2-923	Rear chainguard bottom strap bolt washer (plain)	1
17	C11G	32-194	Rear chainguard bottom strap bolt	1
18	C11G	15-7354	Rear mudguard support top bolt (offside)	1
19	C11G	2-923	Rear mudguard support top bolt washer (plain)	2
20	C11G	2-1934	Rear mudguard support top bolt (nearside)	1
21	C11G	29-6910	Lifting handle	1
22	C11G	2-49	Rear mudguard support top bolt nut	2
23	C11G	36-382	Rear mudguard support top bolt washer (shakeproof)	2
24	C11G	67-6839	Rear mudguard tail lamp wiring grommet	2
25	C11G	2-204	Rear mudguard support bottom bolt	2
26	C11G	29-6818	Rear mudguard complete with fixed fittings	1
26	C11G Spring	29-6817	Rear mudguard with fixed fittings (1954)	1
27	C11G	29-6760	Rear mudguard support complete (offside)	1
27	C11G Spring	29-6902	Rear mudguard support complete (offside) (1954)	1
28	C11G	15-447	Rear mudguard support bottom bolt nut	2
29	C11G	29-6762	Rear mudguard support complete (nearside)	1
29	C11G Spring	29-6904	Rear mudguard support complete (nearside) (1954)	1
30	C11G	2-2395	Toolbox and mudguard fixing bolt nut	2
31	C11G	29-541	Toolbox and mudguard fixing bolt washer (shakeproof)	2
32	C11G	2-204	Toolbox bracket fixing bolt	1
33	C11G	2-525	Toolbox bracket fixing bolt washer (plain)	1
34	C11G	29-9143	Toolbox fixing bracket	1
35	C11G	29-541	Toolbox bracket fixing bolt washer (shakeproof)	1
36	C11G	2-2395	Toolbox bracket fixing bolt nut	1
37	C11G	2-525	Toolbox and mudguard fixing bolt washer (plain)	2
38	C11G	2-204	Toolbox and mudguard fixing bolt	2
39	C11G	2-1354	Rear mudguard bottom front fixing bolt (offside)	1
40	C11G	24-978	Rear mudguard bottom front fixing bolt washer (spring) (offside).	1

Plate 26 REAR MUDGUARD, CHAINGUARD, REAR BRAKE ROD, SILENCER

C10L, C11G

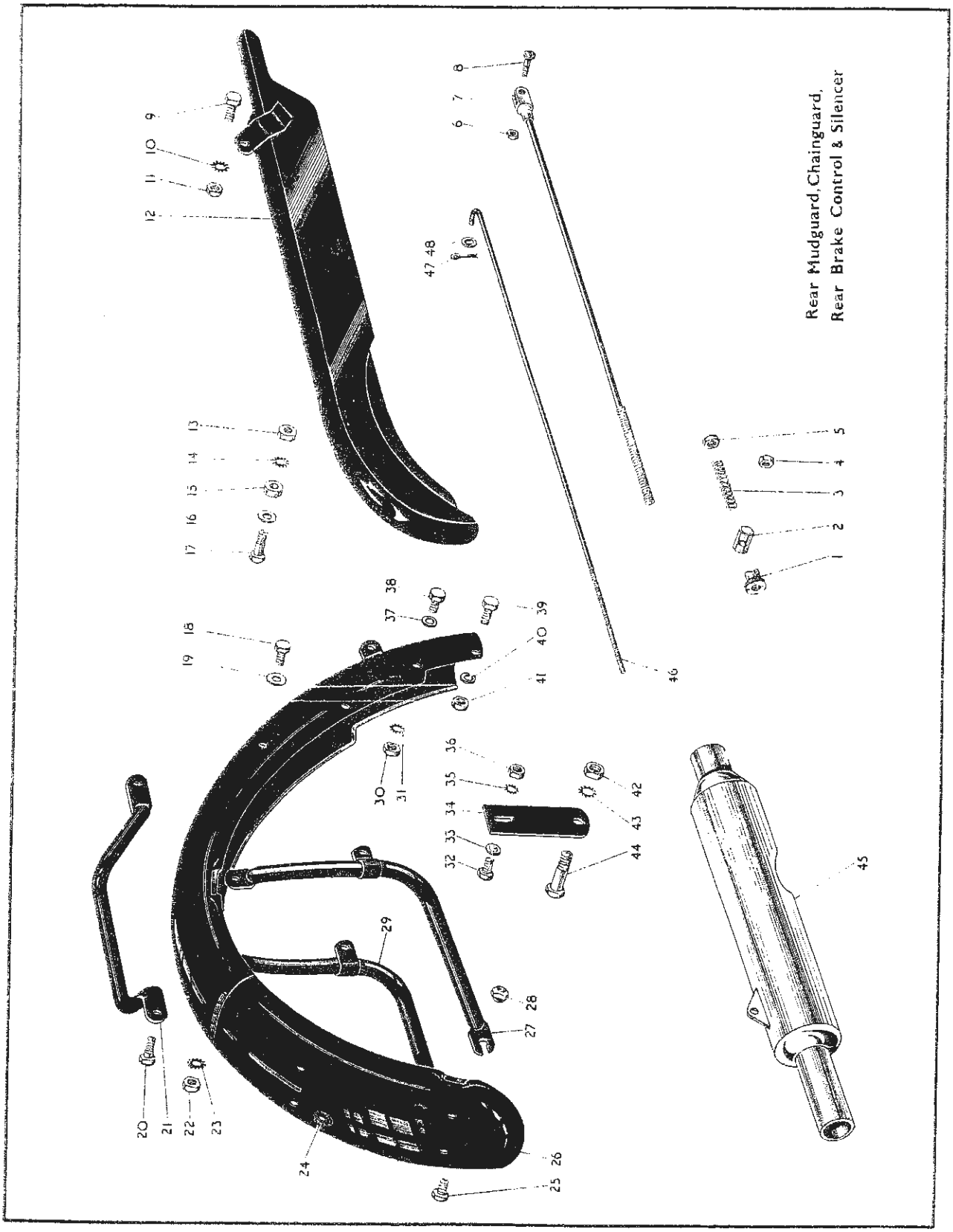

Rear Mudguard Chainguards Rear Brake Rod Silencer
Prop Stand Mudguards Oil Tank Toolbox and Chainguard
Tools and Sundries
Legshields and Bumper Bars
Electrical Equipment
Numerical Index

Plate 26—*continued* Rear Mudguard, Chainguard, Rear Brake Rod, Silencer

C10L, C11G

Plate Ref. Number.	Model.	Part No.	Description.	Number per set.
41	C11G	2-2395	Rear mudguard bottom front fixing bolt nut (offside)	1
42	C11G	2-46	Toolbox bracket fixing bolt nut	1
43	C11G	66-4707	Toolbox bracket fixing bolt washer (shakeproof)	1
44	C11G	3-1088	Toolbox bracket fixing bolt	1
45	C11G	29-2998	Silencer complete	1
46	C10L	90-7012	Rear brake rod	1
47	C10L	35-704	Rear brake rod split pin	1
48	C10L	2-525	Rear brake rod washer	1

Plate 27 Prop Stand, Mudguards, Oil Tank, Toolbox and Chainguard

C12

Plate Ref. Number.	Model.	Part No.	Description.	Number per set.
1	C12	2-49	Rear chainguard fixing bolt nut (rear)	1
2	C12	24-8784	Rear chainguard fixing bolt washer (rear)	1
3	C12	2-923	Rear chainguard fixing bolt washer (rear)	1
4	C12	42-7703	Rear chainguard distance tube	1
5	C12	65-292	Rear chainguard fixing bolt (rear)	1
6	C12	29-8336	Rear chainguard	1
7	C12	24-8784	Rear chainguard fixing bolt washer (front)	2
8	C12	2-353	Rear chainguard fixing bolt (front)	2
9	C12	27-6312	Toolbox bottom fixing bracket bolt	1
10	C12	2-923	Toolbox bottom fixing bracket washer (plain)	1
11	C12	24-8784	Toolbox bottom fixing washer (spring)	1
12	C12	2-49	Toolbox bottom fixing bracket bolt nut	1
13	C12	90-9083	Toolbox lid fastener	1
14	C12	29-4503	Crankcase cover complete	1
15	C12	29-4477	Crankcase cover distance nut	1
16	C12	2-525	Crankcase cover screw washer (plain)	3
17	C12	21-6172	Crankcase cover screw	3
18	C12	89-4283	Crankcase cover cable grommet	1
19	C12	28-2338	Front mudguard bridge fork fixing bolt	4
20	C12	15-7354	Front mudguard stay fixing bolt (centre)	4
21	C12	29-6532	Front mudguard bottom stay	1
22	C12	29-6531	Front mudguard with fixed fittings	1
23	C12	24-8784	Front mudguard stay fixing bolt washer (spring)	4
24	C12	2-1616	Front mudguard stay fixing bolt nut	4
25	C12	2-2395	Front mudguard support bridge fixing bolt nut	2
26	C12	2-1462	Front mudguard support bridge fixing washer (spring)	2
27	C12	24-8784	Front mudguard bridge fork fixing bolt washer (spring)	4
28	C12	2-49	Front mudguard bridge fork fixing bolt nut	4
29	C12	29-6533	Front mudguard support bridge	1
30	C12	29-6532	Front mudguard top stay	1
31	C12	2-2395	Front number plate fixing stud nut	2
32	C12	2-1462	Front number plate fixing washer (spring)	2
33	C12	27-8560	Front number plate washer (plain)	2
34	C12	65-6576	Front number plate complete	1
35	C12	65-8424	Oil return pipe nut	1
36	C12	2-204	Front mudguard top and bottom stay fixing bolt	2
37	C12	27-8560	Front mudguard support bridge fixing bolt washer (plain)	2
38	C12	2-1462	Front mudguard top and bottom stay fixing washer (spring)	4
39	C12	2-2395	Front mudguard top and bottom stay fixing bolt nut	4
40	C12	66-8332	Oil return pipe nut	1
41	C12	27-8560	Front mudguard top and bottom stay fixing bolt washer (plain)	4
42	C12	2-204	Front mudguard top and bottom stay fixing bolt	2
43	C12	42-8334	Oil tank filter complete	1
44	C12	42-8343	Oil tank filter plug washer (fibre)	1
45	C12	29-7996	Oil return pipe complete (crankcase)	1
46	C12	65-8422	Oil pipe connection ferrule	2
47	C12	65-2060	Oil pipe connection	1
48	C12	65-8421	Oil return pipe nut washer	1
49	C12	65-8420	Oil return pipe connection	1

Plate 27 Prop Stand, Mudguards, Oil Tank, Toolbox and Chainguard

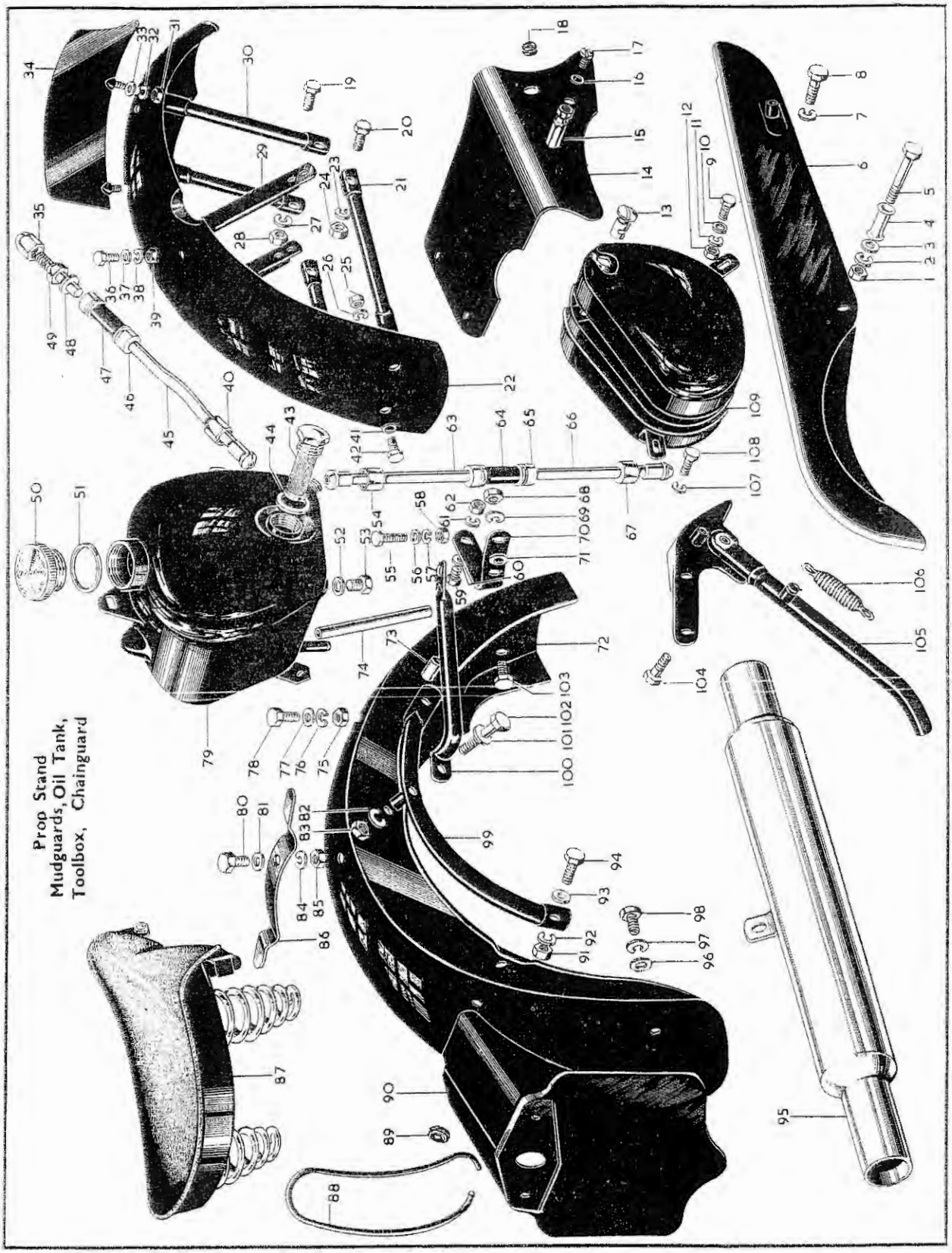

Prop Stand Mudguards Oil Tank Toolbox and Chainguard
Tools and Sundries
Legshields and Bumper Bars
Electrical Equipment
Numerical Index

Plate 27—*continued* Prop Stand, Mudguards, Oil Tank, Toolbox and Chainguard

C12

Plate Ref. Number.	Model.	Part No.	Description.	Number per set.
50	C12	65–8500	Oil tank filler cap	1
51	C12	67–42	Oil tank filler cap washer (fibre)	1
52	C12	2–100	Oil tank drain plug washer (fibre)	1
53	C12	2–84	Oil tank drain plug	1
54	C12	66–8332	Oil pipe nipple nut	1
55	C12	15–2018	Mudguard stay to frame bolt	2
56	C12	2–923	Mudguard stay to frame bolt washer (plain)	2
57	C12	24–8784	Rear mudguard stay to frame bolt washer (spring)	2
58	C12	2–49	Rear mudguard stay to frame bolt nut	2
59	C12	2–1934	Mudguard bottom fixing bracket to battery carrier bolt	1
60	C12	2–923	Mudguard bottom fixing washer	1
61	C12	24–8784	Mudguard bottom fixing bracket to battery carrier washer (spring)	1
62	C12	2–49	Mudguard bottom fixing nut	1
63	C12	29–8350	Oil feed pipe complete	1
64	C12	65–2060	Oil pipe connection	1
65	C12	65–8422	Oil pipe connection ferrule	2
66	C12	29–7996	Oil feed pipe complete (crankcase)	1
67	C12	66–8332	Oil pipe nipple nut	1
68	C12	2–49	Rear mudguard to bracket fixing nut	2
69	C12	24–8784	Rear mudguard to bracket washer (spring)	2
70	C12	29–6737	Rear mudguard bottom fixing bracket	1
71	C12	2–923	Rear mudguard to bracket fixing washer (plain)	1
72	C12	29–6731	Rear mudguard with fixed fittings	1
73	C12	42–8331	Mudguard top pivot distance tube	2
74	C12	42–8072	Oil tank breather pipe extension	1
—	C12	15–2018	Mudguard stay to frame bolt	2
—	C12	2–923	Mudguard stay to frame washer (plain)	2
—	C12	24–8784	Mudguard stay to frame spring washer	2
—	C12	2–49	Mudguard stay to frame nut	2
75	C12	2–49	Mudguard bracket nut	2
76	C12	24–8784	Mudguard bracket washer (spring)	2
77	C12	2–923	Mudguard bracket washer (plain)	2
78	C12	15–7354	Mudguard bracket bolt	2
79	C12	29–8354	Oil tank with fixed fittings	1
80	C12	2–1934	Twin seat rear support bracket to mudguard bolt	2
80	C12	2–220	Mudguard bridge bolt (centre) when dual seat is not fitted	2
81	C12	2–923	Mudguard bridge washer centre (plain)	2
81	C12	2–923	Twin seat fixing bolt washer (plain)	2
82	C12	24–8784	Mudguard stay spring washer (centre)	2
83	C12	2–49	Mudguard stay nut (centre)	2
84	C12	24–8784	Rear support bracket to mudguard washer (spring)	2
84	C12	35–33	Twin seat fixing bolt washer (spring)	4
84	C12	24–8784	Twin seat support bracket to mudguard washer (spring)	2
85	C12	2–49	Rear support bracket to mudguard nut	2
85	C12	2–49	Mudguard bridge bolt nut (centre)	2
86	C12	29–9404	Twin seat rear support bracket	2
87	C12	29–9420	Saddle	1
88	C12	67–6851	Rear number plate rubber extrusion	1
89	C12	67–6839	Rear mudguard tail lamp wire grommet	2
90	C12	67–6885	Rear number plate complete	1
91	C12	2–49	Mudguard stay nut (rear)	2
92	C12	24–8784	Mudguard stay washer (rear) (spring)	2
93	C12	2–923	Mudguard stay washer (rear) (plain)	2
94	C12	28–2338	Mudguard stay bolt (rear)	2
95	C12	29–3005	Silencer	1
96	C12	27–8560	Rear number plate fixing bolt washer (plain)	4
97	C12	2–1462	Rear number plate fixing bolt washer (spring)	4
98	C12	2–220	Rear number plate fixing bolt	4
99	C12	29–6733	Rear mudguard stay (offside)	1
99	C12	29–6732	Rear mudguard stay (nearside)	1
100	C12	29–6743	Lifting handle (nearside)	1
100	C12	29–6742	Lifting handle (offside)	1
101	C12	2–923	Mudguard stay washer centre (plain)	4
102	C12	15–2018	Mudguard stay bolt (centre)	2
103	C12	15–7354	Rear mudguard bottom fixing bolt	2
104	C12	15–480	Pillion footrest bracket and prop stand bolt (when prop stand and pillion footrests are fitted (nearside).	2
105	C12	29–4764	Prop stand complete	1
106	C12	65–4742	Prop stand spring	1
107	C12	24–8784	Toolbox top fixing bolt washer (spring)	1
108	C12	67–8313	Toolbox fixing bolt	1
109	C12	29–9170	Toolbox complete	1

TOOLS and SUNDRIES

C10L, C11G and C12

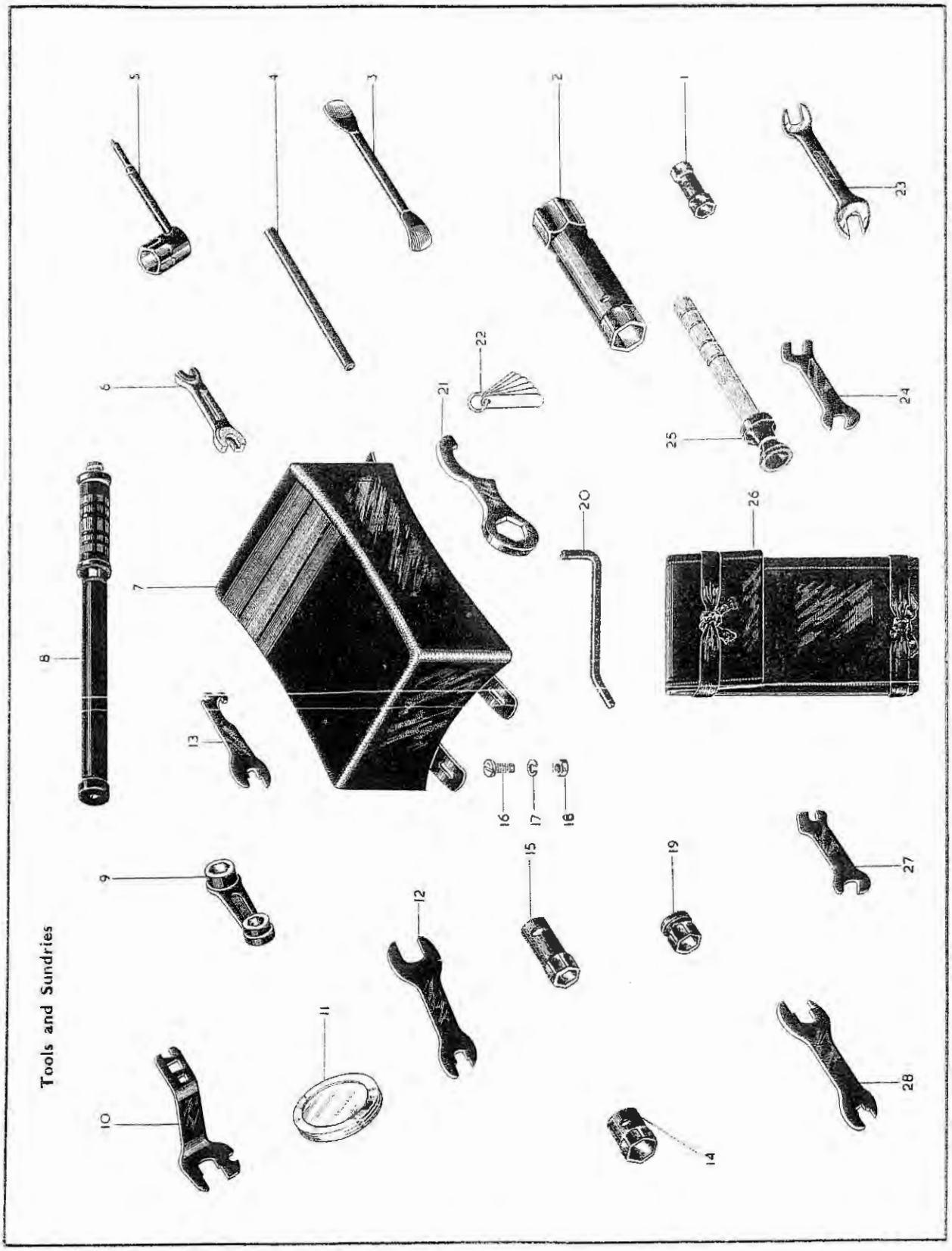

Tools and Sundries
Legshields and Bumper Bars
Electrical Equipment
Numerical Index

Plate 28

TOOLS and SUNDRIES

C10L, C11G and C12.

Plate Ref. Number	Model.	Part No.	Description.	Number per set.
—	C10L	29–9243	Toolbag complete with tools	1
—	C10L	29–9248	Toolbag complete with tools (1954/5)	1
—	C12	29–9244	Toolbag complete with tools	1
1	C10L, C11G, C12	65–9115	Box spanner	1
2	C11G, C12	29–9256	Hub spindle nut and alternator spanner	1
3	C10L	90–9018	Tyre lever	1
3	C11G, C12	29–9252	Tyre lever	1
4	C10L, C11G, C12	24–8957	Tommy bar	1
5	C10L, C11G, C12	66–9132	Sparking plug spanner	1
6	C10L	1–3051	Double ended spanner	1
7	C10L, C11G	65–9170	Pillion seat	1
8	C10L, C11G, C12	42–9026	Inflator	1
9	C11G, C12	15–832	Box spanner	1
10	C10L, C11G, C12	29–9254	Combination spanner	1
11	C10L, C11G, C12	29–9221	Licence holder	1
12	C10L	90–9071	Cone spanner	2
13	C11G, C12	29–9255	Front hub cone spanner	1
14	C10L	90–9071	Rear hub spindle nut and generator spanner	1
15	C10L, C11G, C12	29–9257	Clutch centre nut spanner	1
16	C10L, C11G	15–7161	Pillion seat bolt	4
17	C10L, C11G	2–1462	Pillion seat bolt washer (spring)	4
18	C10L, C11G	2–2395	Pillion seat bolt nut	4
19	C10L, C11G, C12	66–9036	Box spanner	1
20	C10L, C11G, C12	29–9253	Tommy bar	1
21	C11G, C12	65–9243	Front fork top nut spanner	1
22	C10L, C11G, C12	65–9130	Tappet feelers (set)	1
23	C11G, C12	67–9028	Spanner	1
24	C10L	65–9132	Tappet adjusting spanner	1
25	C11G	65–9240	Grinding tool	1
26	C10L	90–9013	Toolbag only (1954/5)	1
26	C10L, C11G, C12	65–9205	Toolbag only	1
27	C10L, C11G, C12	65–9133	Tappet adjusting spanner	1
28	C10L, C11G	65–9246	Combination spanner (1954/5)	1
29	C12	65–9246	Combination spanner	1

Plate 29

LEGSHIELDS

C10L, C11G and C12

Plate Ref. Number.	Model.	Part No.	Description.	Number per set.
—	C10L	29–7465	Legshields assembled complete	1
—	C11G, C12	29–7466	Legshields assembled complete	1
1	C10L	29–7469	Legshield top support tube	1
2	C10L, C11G, C12	21–5102	Legshield support tube clip bolt nut	2
3	C10L, C11G, C12	29–541	Legshield support tube clip bolt washer	2
4	C10L, C11G, C12	2–525	Legshield support tube clip bolt washer (plain)	2
5	C10L, C11G, C12	21–5402	Legshield support tube clip bolt	2
5	C10L	21–5612	Legshield support tube clip bolt (1956)	2
6	C10L, C11G, C12	29–7474	Legshield top support tube clip	1
7	C11G, C12	29–7470	Legshield top support tube	1
8	C10L, C11G, C12	21–5102	Legshield support tube screw nut	8
9	C10L, C11G, C12	29–541	Legshield support tube screw washer	8
10	C10L, C11G, C12	2–525	Legshield support tube screw washer (plain)	8
11	C10L, C11G, C12	21–6173	Legshield support tube screw	8
12	C10L, C11G, C12	29–7467	Legshield (nearside)	1
13	C10L, C11G, C12	29–7468	Legshield (offside)	1
14	C10L, C11G	24–8784	Engine plate and legshield fixing stud washer	2
15	C10L, C11G, C12	29–4101	Engine plate and legshield fixing stud	1
16	C10L, C11G	2–2899	Bottom support distance washer	1
17	C10L, C11G	24–5160	Engine plate and legshield fixing stud nut	2
18	C10L, C11G, C12	29–7471	Legshield bottom support tube	1

LEGSHIELDS

C10L and C11G

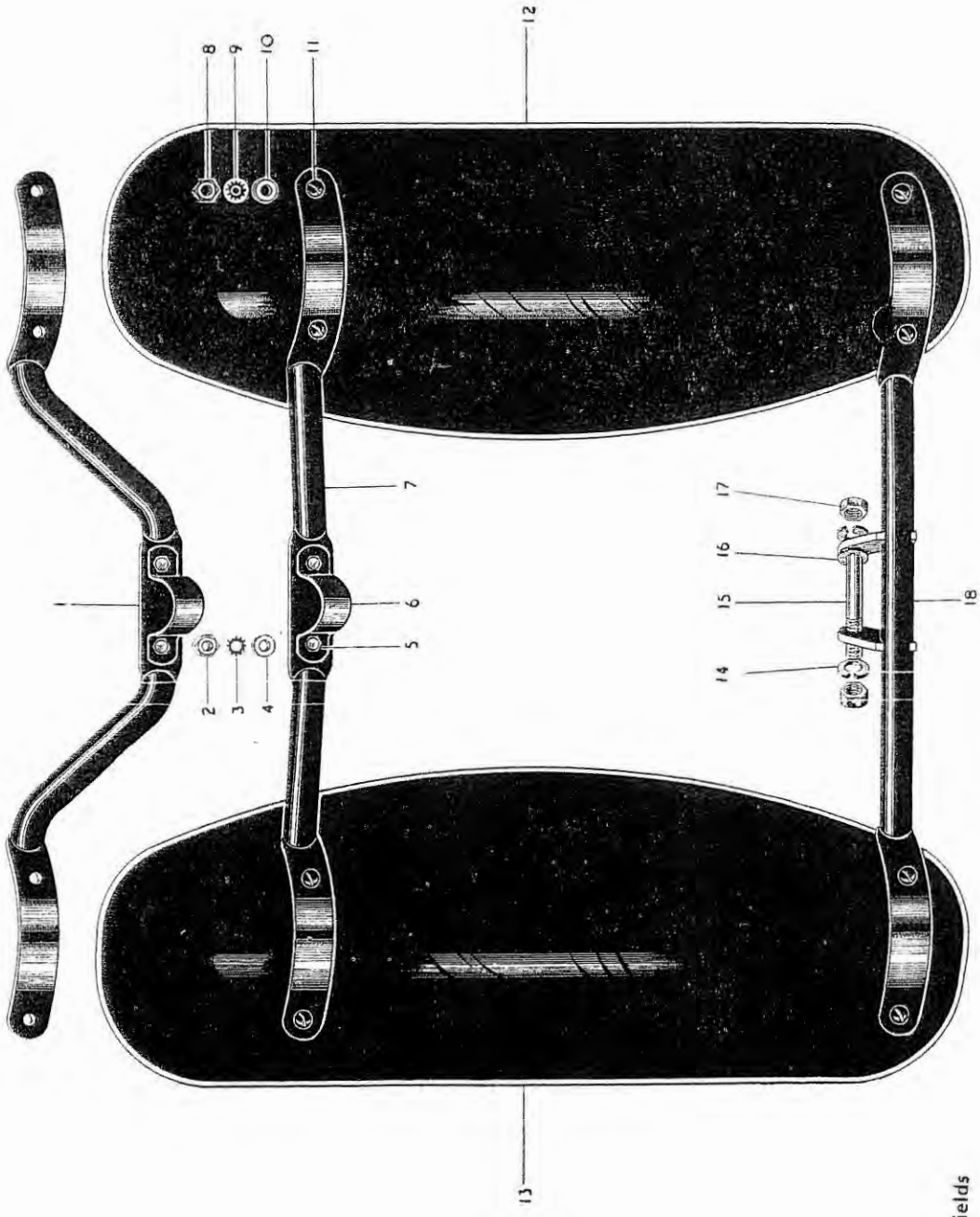

Legshields

Legshields and Bumper Bars

Electrical Equipment

Numerical Index

Plate 30 LEGSHIELDS and BUMPER BARS

C10L, C11G and C12

Plate Ref. Number.	Model.	Part No.	Description	Number per set.
—	C10L	29-7665	Legshields and bumper bar assembly	1
—	C11G, C12	29-7620	Legshields and bumper bar assembly	1
1	C10L, C11G, C12	29-7621	Legshield (offside)	1
2	C10L, C11G, C12	29-7622	Legshield (nearside)	1
3	C10L	29-7664	Front bumper bar assembly with clips, bolts, nuts, and washers	1
3	C11G, C12	29-7619	Front bumper bar assembly with clips, bolts, nuts and washers	1
4	C10L	29-4101	Front bumper bar bracket stud	1
4	C11G, C12	29-7670	Front bumper bar bracket stud	1
5	C10L, C11G, C12	15-7161	Legshield clip screw	8
6	C10L, C11G, C12	27-8560	Legshield clip screw washer (plain)	8
7	C10L, C11G, C12	24-8928	Legshield clip	8
8	C10L, C11G, C12	2-1462	Legshield clip screw spring washer	8
9	C10L, C11G, C12	2-2395	Legshield clip screw nut	8
10	C10L, C11G, C12	27-6037	Front bumper bar clip bolt	2
11	C10L, C11G, C12	2-923	Front bumper bar bolt washer (plain)	2
12	C10L, C11G, C12	24-8784	Front bumper bar bolt washer (spring)	2
13	C10L, C11G, C12	2-49	Front bumper bar bolt nut	2
14	C11G, C12	29-7627	Front bumper bar clip	1
15	C10L	29-7663	Front bumper bar clip	1

Plate 31 ELECTRICAL EQUIPMENT

C10L.

Plate Ref. Number	Model.	Part No.	Description.	Number per set.
1	C10L	29-9371	Ignition coil (1956)	1
2	C10L	15-7563	Rectifier distance piece (1956)	1
3	C10L	19-81	Rectifier (1954/5)	1
4	C10L	19-13	Headlamp complete (1956)	1
5	C10L	90-9021	Speedometer cable (1954/5)	1
5	C10L	29-9402	Speedometer cable (1956)	1
6	C10L	29-9294	Speedometer fixing nut	1
6	C10L	29-9295	Speedometer fixing nut	1
7	C10L	29-9293	Speedometer head (m.p.h.)	1
7	C10L	19-2113	Speedometer head (k.p.h.)	1
8	C10L	2-2980	Stop light switch fixing bolt (1954/5)	1
9	C10L	90-9120	Stop and tail lamp switch (1954/5)	1
10	C10L	29-541	Stop light switch fixing bolt washer (1954/5) (shakeproof)	1
11	C10L	2-49	Stop light switch fixing bolt nut (1954/5)	1
12	C10L	65-5912	Stop light brake rod clip screw (1954/5)	1
13	C10L	65-9228	Stop light brake rod clip (1954/5)	1
14	C10L	29-3319	Stop light brake rod clip washer (shakeproof) (1954/5)	1
15	C10L	2-1588	Stop light brake rod clip nut (1954/5)	1
16	C10L	65-9231	Stop and tail lamp operating spring (1954/5)	1
17	C10L	19-68	Stop and tail lamp (1955/6)	1
18	C10L	2-204	Stop light switch fixing bolt (1956)	1
19	C10L	90-9124	Stop and tail lamp operating spring (1956)	1
20	C10L	19-181	Stop and tail lamp switch (1956)	1
21	C10L	90-9024	Rubber cable clip (small)	2
22	C10L	29-9349	Horn push with cable	1
23	C10L	66-9049	Rubber cable clip (large)	6
24	C10L	29-9355	Electric horn	1
25	C10L	24-8784	Horn securing bolt washer (spring)	1
26	C10L	21-5452	Horn securing bolt	1
27	C10L	19-6	Headlamp complete	1
28	C10L	19-81	Rectifier (1956)	1
29	C10L	21-5102	Ignition coil bolt nut	1
30	C10L	2-1462	Ignition coil bolt nut washer (spring)	1
31	C10L	27-8560	Ignition coil bolt nut washer (plain)	1
32	C10L	27-8560	Ignition coil bolt nut washer (plain)	1
33	C10L	21-5619	Coil ignition bolt	1
34	C10L	29-9359	Ignition coil (1954/5)	1
—	C10L	19-1552	Battery	1

LEGSHIELDS and BUMPER BARS

C10L, C11G and C12

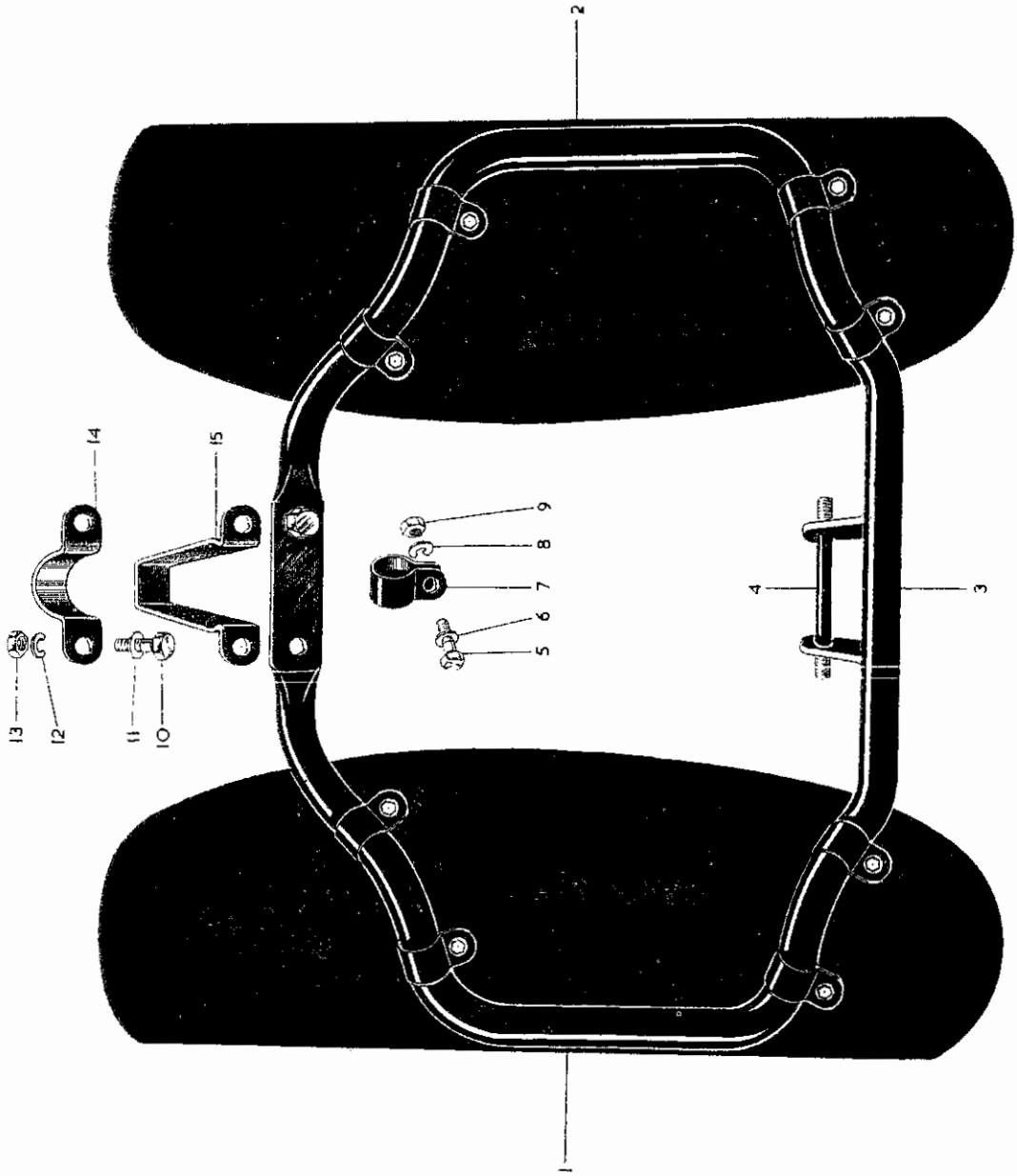

Legshields and Bumper Bars

Electrical Equipment

Numerical Index

ELECTRICAL EQUIPMENT

C10L

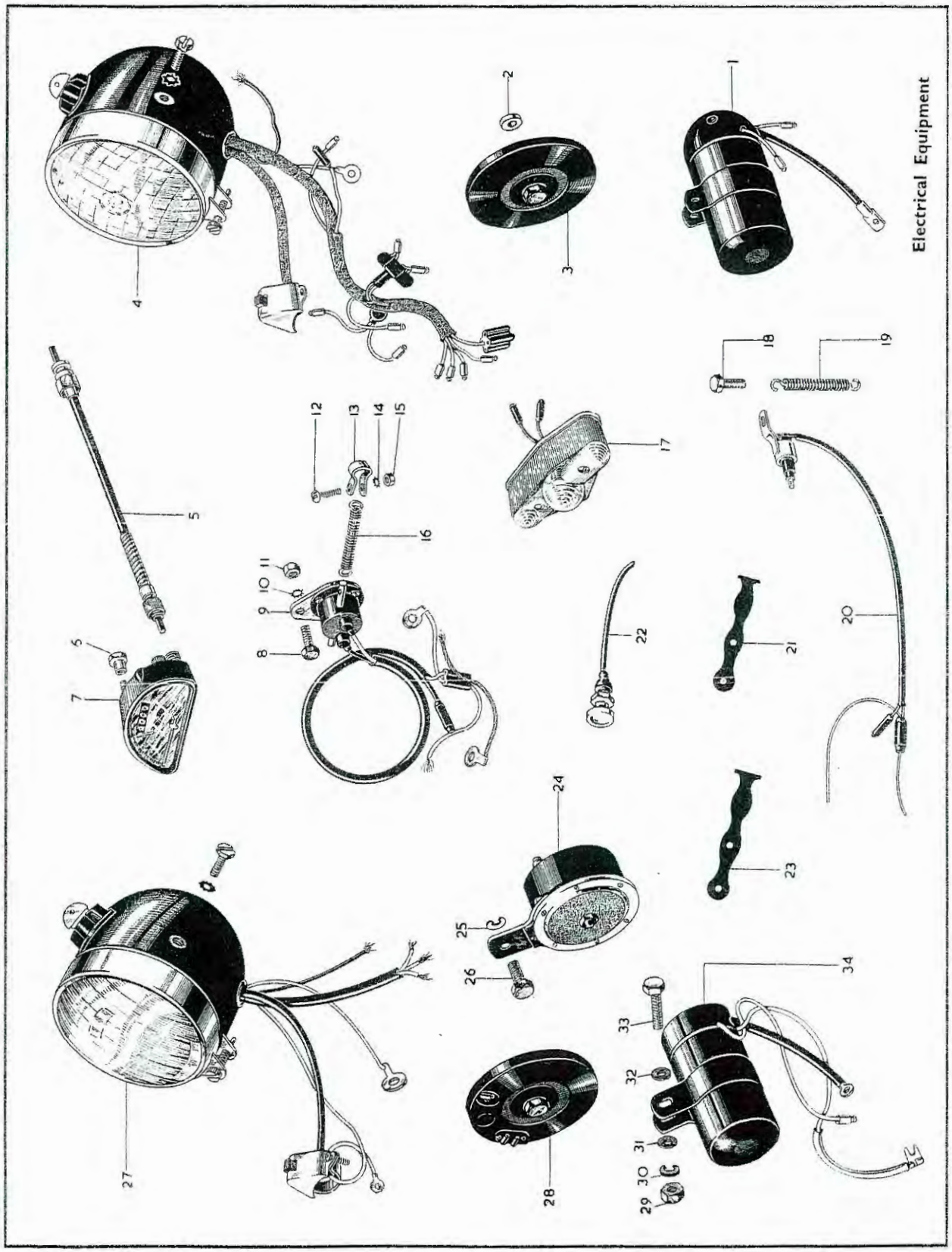

ELECTRICAL EQUIPMENT

C11G and C12

Plate Ref. Number	Model.	Part No.	Description.	Number per set
1	C11G	2-1588	Stop lamp switch operating spring clip bolt nut	1
2	C11G	29-541	Stop lamp switch operating spring clip washer (shakeproof)	1
3	C11G	65-9228	Stop lamp switch operating spring clip	1
4	C11G	2-1096	Stop lamp switch operating spring clip washer (spring)	1
5	C11G	2-1584	Stop lamp switch operating spring clip bolt	1
6	C11G	65-9231	Stop light switch tension spring	1
6	C12	29-9426	Stop light switch tension spring	1
7	C11G, C12	2-47	Stop lamp switch screw nut	2
8	C11G, C12	29-3319	Stop lamp switch screw washer (shakeproof)	2
9	C11G, C12	19-1114	Stop lamp switch	1
9A	C12	15-4169	Stop light switch bolt	2
10	C11G	24-7065	Stop light switch screw	2
11	C12	19-707	Switch and cable assembly	1
12	C12	19-531	Headlamp (right-hand dip)	1
13	C12	29-9293	Speedometer head (m.p.h.)	1
13	C11G	19-2105	Speedometer head (m.p.h.)	1
13	C11G	19-2116	Speedometer head (k.p.h.)	1
13	C12	19-2113	Speedometer head (k.p.h.)	1
14	C11G, C12	65-9179	Speedometer bracket bolt	2
15	C11G, C12	2-1374	Speedometer mounting bolt washer (plain)	2
16	C11G, C12	65-9111	Speedometer bracket	1
17	C11G, C12	15-7383	Speedometer mounting rubber	4
18	C11G	19-1000	Stop and tail lamp	1
18	C12	19-1011	Stop and tail lamp	1
19	C11G, C12	67-9057	Speedometer cable (4-speed gearbox)	1
20	C11G	29-9341	Speedometer cable (3-speed gearbox) 1955	1
21	C11G	67-9039	Speedometer cable clip (engine bolt) (4-speed gearbox)	1
21	C12	67-9039	Speedometer cable clip (engine bolt)	1
22	C11G	90-9060	Front brake cable clip	1
23	C11G	67-9060	Speedometer cable clip (3-speed gearbox)	1
24	C12	19-1644	Rectifier	1
24	C11G	19-1644	Rectifier	1
25	C11G	19-2016	Electric horn	1
25	C12	42-9046	Electric horn	1
26	C11G	19-523	Headlamp complete	1
27	C11G	19-2017	Electric horn push	1
27	C12	29-9349	Electric horn push	1
28	C11G, C12	66-9049	Speedometer cable clip (rubber) (large)	6
29	C11G, C12	90-9024	Speedometer cable clip (rubber) (small)	2
30	C11G	29-9331	Speedometer cable clip (head lug) (4-speed gearbox)	1
30	C12	29-9331	Speedometer cable clip (head lug)	1
31	C12	19-708	Coil	1
32	C11G	19-691	Coil	1
—	C11G, C12	19-1552	Battery	1
33	C12	24-978	Coil fixing bolt spring washer	2
34	C12	2-2395	Coil fixing bolt nut	2
35	C12	27-8560	Coil fixing bolt washer (plain)	2
36	C12	2-204	Coil fixing bolt	2

Electrical Equipment

Numerical Index

Plate 32

ELECTRICAL EQUIPMENT

C11G and C12

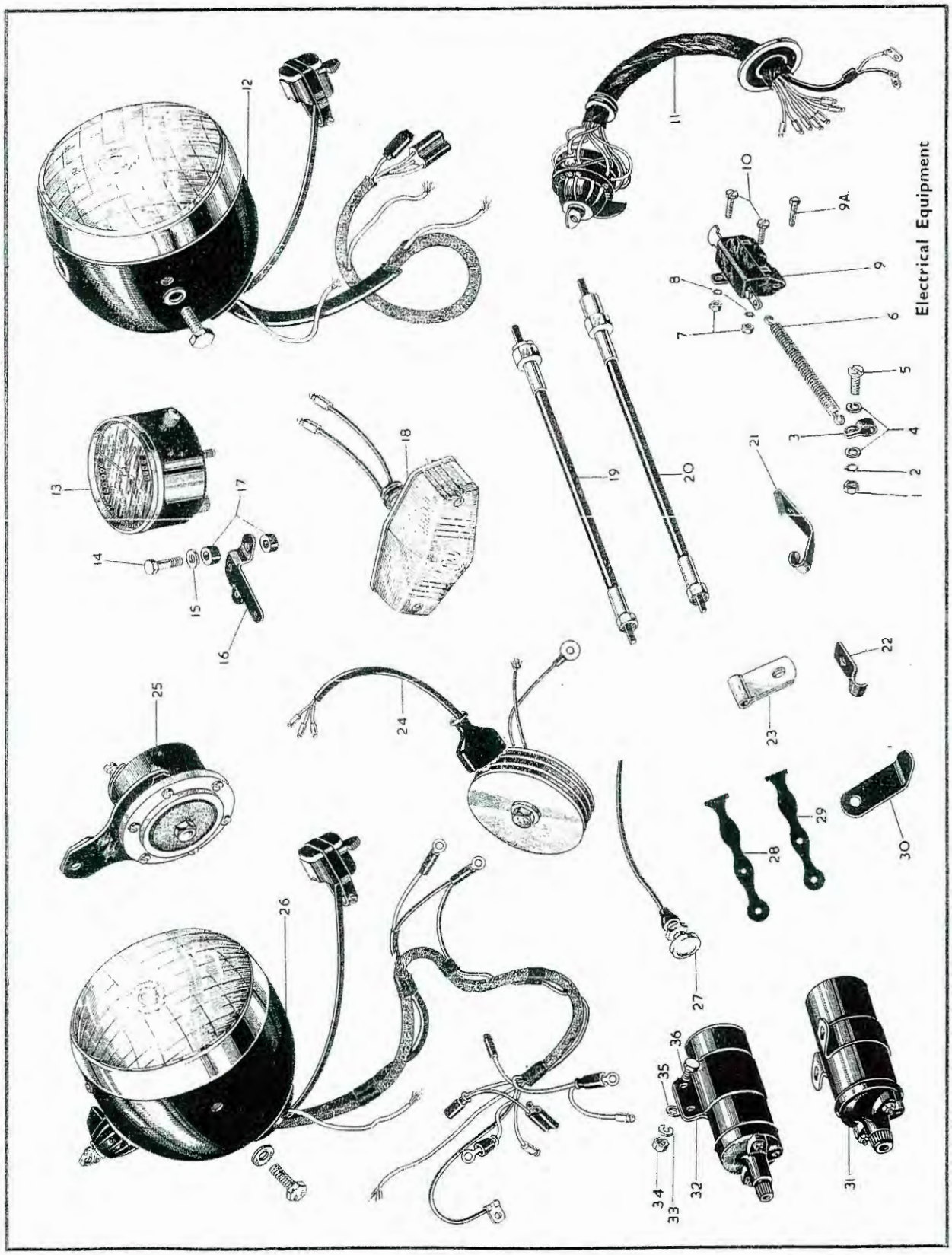

ENGINE AND FRAME MARKINGS

for C10L and C11G 1954.

Model	Type.	Engine.	Frame.
C10L	250c.c. S.V. (Spring Frame)	BC10L–101 upwards	BC10LS–101 upwards
C11G	250c.c. O.H.V. (Rigid Frame)	BC11G–101 upwards	BC11–101 upwards
C11G	250c.c. O.H.V. (Spring Frame) (3-speed)	BC11–G101 upwards	BC11S–101 upwards
C11G	250c.c. O.H.V. (Spring Frame) (4-speed)	BC11G–101 upwards	BC11S4 101 upwards

ENGINE AND FRAME MARKINGS

for C10L and C11G 1955

Model.	Type.	Engine.	Frame.
C10L	250c.c. S.V. (Spring Frame)	BC10L–4001 upwards	BC10LS–4501 upwards
C11G	250c.c. O.H.V. (Spring Frame) (3-speed)	BC11G–11501 upwards	BC11S–4001 upwards
C11G	250c.c. O.H.V. (Spring Frame) (4-speed)	BC11G–11501 upwards	BC11S4–8001 upwards

ENGINE AND FRAME MARKINGS

for C10L and C12 1956

Model.	Type.	Engine	Frame.
C1L0	250c.c. S.V. (Spring Frame)	BC10L–7001	DC10S–101
C12	250c.c. O.H.V. (Swinging Hrm)	BC11G–23001	EC12–101

CARBURETTERS AND SETTINGS

MESSRS. AMALGAMATED CARBURETTERS LTD., PERRY BARR, BIRMINGHAM.

Part No.	Model	Type	Choke Size (inches)	Main Jet	Throttle Valve	Needle Position	Needle Jet	Engine End Size (inches)	Year
19-2323	C10L	274BT/3EG	25/32	90	4/4	2	.1055	25/32	1954
19-2322	C11G	274BU/1EH	25/32	80	4/4	3	.1065	25/32	1954
29-306 with air bell	C10L	Monobloc 375/2	25/32	120	375/3½	2	.1055	25/32	1955/6
29-307 for filter fitting	C10L	Monobloc 375/2	25/32	85	375/3½	2	.1055	25/32	1955/6
29-308 with air bell	C11G	Monobloc 375/4	25/32	140	375/3½	3	.1055	25/32	1955
29-309 for filter fitting	C11G	375/4	25/32	100	375/3½	3	.1055	25/32	1955
29-308 with air bell	C12	Monobloc 375/4	25/32	140	375/3½	3	.1055	25/32	1956
29-309 for filter fitting	C12	375/4	25/32	100	375/3½	3	.1055	25/32	1956

PISTONS 1954/5/6

MODELS	Compression Ratio	PISTONS COMPLETE			COMPRESSION RINGS			SCRAPER RINGS		
		Standard	½ mm. OS	1 mm. OS	Standard	½ mm. OS	1 mm. OS	Standard	½ mm. OS	1 mm. OS
C10L	5 to 1	29-2561	29-2562	29-2563	29-2620(2)	29-2621(2)	29-2622(2)	65-730	65-731	65-732
C11G	6.5 to 1	29-2568	29-2569	29-2570	29-2620(2)	29-2621(2)	29-2622(2)	29-2623	29-2624	29-2625
C12	6.5 to 1	29-2568	29-2569	29-2570	29-2620(2)	29-2621(2)	29-2622(2)	29-2623	29-2624	29-2625

STANDARD WASHERS (Plain).

Part No.	Outside Dia.	Inside Dia.	Thickness.	Part No.	Outside Dia.	Inside Dia.	Thickness.
1–1804	.680″	.385″	.072″	2–2580	.500″	.275″	.064″
2–130	.687″	.380″	.080″	3–3525	.562″	.218″	.048″
2–370	.625″	.317″	.156″	15–39	.840″	.505″	.064″
2–525	.500″	.255″	.048″	15–431	.750″	.442″	.064″
2–861	.750″	.380″	.081″	15–5155	.525″	.328″	.048″
2–923	.625″	.317″	.062″	24–594	.937″	.505″	.092″
2–1096	.375″	.192″	.044″	24–7911	.875″	.380″	.156″
2–1291	.750	.522″	.080″	25–7180	1.00″	.281″	.048″
2–1374	.656″	.255″	.080″	26–9461	.562″	.203″	.048″
2–1945	.875″	.442″	.064″	27–5676	1.00″	.380″	.092″
2–2138	.750″	.380″	.064″	27–6560	.625″	.255″	.048″

STANDARD WASHERS (Spring).

Part No.	Outer Dia	Inside Dia.	Thickness.	Part No.	Outer Dia.	Inside Dia.	Thickness.
2–522	.750″	.390″	.056″	15–716	.937″	.453″	.064″
2–995	.656″	.380″	.040″ double	24–978	.437″	.255″	.040″
2–1462	.593″	.255″	.040″	24–6035	.593″	.317″	.040″ double
2–1967	.875″	.440″	.064″	27–6043	.750″	.437″	.046″ double
2–2903	.562″	.406″	.062″	24–8784	.625″	.315″	.040″
3–110	.441″	.281″	.080″	35–33	.500″	.343″	.080″
3–111	.614″	.406″	.104″				

STANDARD WASHERS (Shakeproof).

Part No.	Outer Diameter.	Inside Diameter.	Part No.	Outer Diameter.	Inside Diameter.
29–541	1/2″	1/4″	36–399	11/16″	3/8″
29–3319	3/8″	3/16″	65–595	7/8″	1/2″
36–341	9/16″	5/16″	66–4707	11/16″	3/8″
36–382	9/16″	5/16″	66–4708	3/4″	7/16″

British Only

MOTORCYLES AND PARTS INC.

32451 PARKLANE ST.
GARDEN CITY, MI 48135 USA

WWW.BRITISHONLY.COM
INFO@BRITISHONLY.COM

RETAIL: 1-800-278-6659 ***WHOLESALE: 1-800-852-9253*** ***FAX: 1-734-422-9253***

WORLDS LARGEST SELECTION OF FACTORY ORIGINAL NEW AND USED PARTS

45,000 SQ. FT. OF MOTORCYLE PARTS & ACCESSORIES FROM 1911 TO 1984 FOR ALL BRITISH MAKES!
CASH FOR ALL BRITISH BIKES, PARTS AND LITERATURE

SPECIALIZING IN
VINTAGE MOTORCYLCE PARTS

TRIUMPH
Norton
BSA

THE BIGGEST!

ENGINE REBUILDING PARTS
GASKET - SEALS - BEARINGS
BUSHINGS - PISTONS - RINGS
CLUTCHES - TUNE UP PARTS
SPEED EQUIPMENT

THE BEST!

STOCK AND CUSTOM PARTS
SEATS - HANDLEBARS - CHAINS
TIRES - TUBES - EXHAUST PIPES
MUFFLERS - GAS TANKS - FENDERS
RESTORATION PARTS

THE ONLY!

Central Wheel Components · Barnett Clutches & Cables · Classic Transfers Robert Derrick Ltd · Renold · Lucas · Amal · Emgo Your Powersport Supplier · Brituro England · JP Pistons · Hastings · UH

VELOCETTE • ANDOVER NORTON • TEC • HAYNES • P&P SEATING • WASSELL • MORGO
ALPHA BEARINGS • M.A.C. PRODUCTS • JOE HUNT MAGNETOS • J.J. CABLES • BUCHANAN'S
L.A. SLEEVE • MEGACYCLE CAMS • T.J. WASSELL LIMITED • SUDCO INTERNATIONAL
ACE CLASSICS LONDON • CLASSIC GASKETS • BRITISH WIRING • PBM ENGINEERING
TRI-COR ENGLAND • LEAK PROOF SEALS • MCA (ASTON) LIMITED • GARDNER - WESTCOTT

WE ACCEPT VISA - MASTERCARD - DISCOVER - AMERICAN EXPRESS

PARTS SHIPPED WORDLWIDE !!! VISA · MasterCard · Discover · American Express

VISIT OUR EBAY STORE
http://stores.ebay.com/British-Only-Motorcycles-And-Parts

British Only

MOTORCYCLES AND PARTS INC.
32451 PARKLANE ST
GARDEN CITY, MI 48135 USA
PHONE: **800-278-6659**
FAX: **734-422-9253**

Year:	Make:	Model:
Engine #		
Frame #		

WWW.BRITISHONLY.COM
INFO@BRITISHONLY.COM

Quantity	Part #	Description	Each	Amount

Date _____ / _____ / _____ **Customer #** _____ **Salesperson** _____

Card Number _____ **Expires** _____

Name _____

Address _____

City/State/Zip _____

Phone _____ / _____ **Fax** _____

Email _____

Signature _____

Subtotal	
Insurance	
Shipping	
Total	
Michigan Residents Add 6% Sales Tax	
Amount Enclosed	

FOLD

Name _____

Address _____

City _____

State _____ Zip _____

USE
FIRST CLASS
LETTER
POSTAGE

British Only

MOTORCYCLES AND PARTS INC.

32451 PARKLANE ST
GARDEN CITY, MI 48135 USA

FOLD

British Only

MOTORCYCLES AND PARTS INC.
32451 PARKLANE ST
GARDEN CITY, MI 48135 USA
PHONE: **800-278-6659**
FAX: **734-422-9253**

Year:	Make:	Model:
Engine #		
Frame #		

WWW.BRITISHONLY.COM
INFO@BRITISHONLY.COM

Quantity	Part #	Description	Each	Amount

Date _____ / _____ / _____ **Customer #** _____ **Salesperson** _____

Card Number _____ **Expires** _____

Name _____

Address _____

City/State/Zip _____

Phone _____ / _____ **Fax** _____

Email _____

Signature _____

Subtotal	
Insurance	
Shipping	
Total	
Michigan Residents Add 6% Sales Tax	
Amount Enclosed	

FOLD

Name _____

Address _____

City _____

State _____ Zip _____

USE
FIRST CLASS
LETTER
POSTAGE

British Only

MOTORCYCLES AND PARTS INC.

32451 PARKLANE ST
GARDEN CITY, MI 48135 USA

FOLD