20-10229 C

TRIUMPH

REPLACEMENT PARTS

for

SPEED TWIN • THUNDERBIRD • TIGER 100 • TROPHY

FROM ENGINE No. 15809 NA

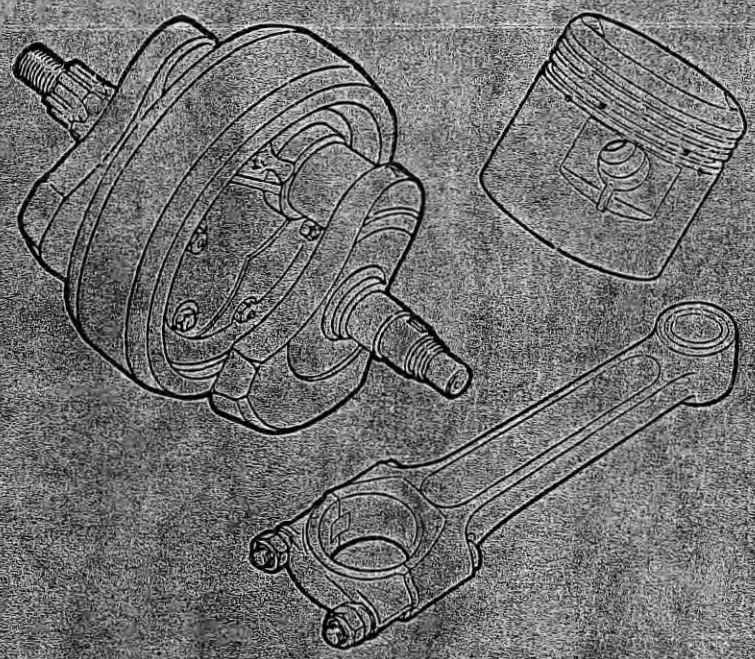

P5501-02

MANIÈRE D'IDENTIFIER LA PIÈCE DE RECHANGE REQUISE.

Afin d'assister MM. les marchands et MM. les possesseurs à l'identification des pièces de rechange ce livre contient de nombreuses illustrations des montages principaux en façon de "perspectives éclatées".

Chaque pièce composante est numérotée ; en se référant à l'index des illustrations on peut trouver le numéro relatif.

A côté de chaque pièce illustrée se trouve le numéro de la page et le numéro de référence ; en se référant à la page appropriée la description complète de la pièce sera facilement constatée.

Exemple.

Pour identifier le numéro de référence du segment racleur pour le modèle 5T veuillez :—

1. Se référer à la page intitulée "Illustration index" où on trouvera que la "perspective éclatée" du moteur de la 5T est illustrée sur la page 26.
2. Noter qu'à côté du segment racleur se trouve le numéro 5.
3. Se référer a l'index donné sur la page numéro 27.
4. On y constatera que, suivant le numéro 5 se trouve
   (a) le numéro relatif—GE. 29
   (b) le numéro de la page d'index—24
   (c) la ligne de référence—9.

ANWEISUNG ZUR IDENTIFIZIERUNG BENOETIGTER ERSATZTEILE.

Dieses Buch enthaelt mehrere zerlegte Ansichten der wesentlichen Bestandteile, um den Eigentuemern und Haendlern bei der Identifizierung ihrer Beduerfnisse behilflich zu sein.

Jede Komponente ist nummeriert, und unter Bezugnahme des Illustrations—Indexes kann die Teilnummer der Komponente gefunden werden.

Gegen jede Teilnummer ist eine Seiten- und eine Referenznummer gegeben, und unter Beruecksichtigung der Seite kann man die vollstaendige Beschreibung des Teiles an hand der Referenznummer ermitteln.

Beispiel.

Wie findet man die Teilnummer eines Abstreifringes fuer Modell 5T.

1. Man findet auf Illustrations-Index-Seite, dass sich die zerlegte Ansicht des Motors 5T auf Seite 26 befindet.
2. Die Illustration zeigt als nummer des Abstreifringes : 5.
3. Der hierzu in Frage kommende Index befindet sich auf Seite 27.
4. No. 5 (Nummer des Abstreifringes) traegt Teilnummer G.E. 29, aufgefuehrt auf Seite 24, Linie 9.

MANERA DE ECONTRAR LA PIEZA DESEADA.

Para ayudar al propietario y al representante en la identificación de las piezas deseadas este libro contiene numerosas ilustraciones de los principales montages.

Cada pieza componente está numerada y al referirse al índice de ilustraciones, se encontrará el número de la pieza.

Contra el número de cada pieza se muestra el número de la página y el número de referencia, y al referirse a la página apropiada, la descripcion completa de cada pieza se encontrara contra el número de referencia.

Ejemplo.

Para encontrar el número de pieza de un segmento para el modelo 5T.

1. Referirse a la página-indice de ilustraciónes donde se verá que la ilustración del montage del motor 5T esta en la página 26.
2. Nótese que el número del segmento en la ilustración es 5.
3. Referirse al índice de la ilustración en question en la página 27.
4. Notese que No. 5 es pieza número GE29 en la lista de la página 24, linea de referencia No. 9.

British Only

MOTORCYLES AND PARTS INC.

32451 PARKLANE ST.
GARDEN CITY, MI 48135 USA

WWW.BRITISHONLY.COM
INFO@BRITISHONLY.COM

RETAIL: 1-800-278-6659 ***WHOLESALE: 1-800-852-9253*** ***FAX: 1-734-422-9253***

WORLDS LARGEST SELECTION OF FACTORY ORIGINAL NEW AND USED PARTS

45,000 SQ. FT. OF MOTORCYLE PARTS & ACCESSORIES FROM 1911 TO 1984 FOR ALL BRITISH MAKES!
CASH FOR ALL BRITISH BIKES, PARTS AND LITERATURE

SPECIALIZING IN
VINTAGE MOTORCYLCE PARTS

TRIUMPH
Norton
BSA

THE BIGGEST!

ENGINE REBUILDING PARTS
GASKET - SEALS - BEARINGS
BUSHINGS - PISTONS - RINGS
CLUTCHES - TUNE UP PARTS
SPEED EQUIPMENT

THE BEST!

STOCK AND CUSTOM PARTS
SEATS - HANDLEBARS - CHAINS
TIRES - TUBES - EXHAUST PIPES
MUFFLERS - GAS TANKS - FENDERS
RESTORATION PARTS

THE ONLY!

Central Wheel Components · Barnett Clutches & Cables · Classic Transfers Robert Derrick Ltd · Renold · Lucas · Amal · Emgo Your Powersport Supplier · Brituro England · JP Pistons · Hastings · UH

VELOCETTE • ANDOVER NORTON • TEC • HAYNES • P&P SEATING • WASSELL • MORGO
ALPHA BEARINGS • M.A.C. PRODUCTS • JOE HUNT MAGNETOS • J.J. CABLES • BUCHANAN'S
L.A. SLEEVE • MEGACYCLE CAMS • T.J. WASSELL LIMITED • SUDCO INTERNATIONAL
ACE CLASSICS LONDON • CLASSIC GASKETS • BRITISH WIRING • PBM ENGINEERING
TRI-COR ENGLAND • LEAK PROOF SEALS • MCA (ASTON) LIMITED • GARDNER - WESTCOTT

WE ACCEPT VISA - MASTERCARD - DISCOVER - AMERICAN EXPRESS

PARTS SHIPPED WORDLWIDE !!! VISA · MasterCard · Discover · American Express

VISIT OUR EBAY STORE
http://stores.ebay.com/British-Only-Motorcycles-And-Parts

British Only

MOTORCYLES AND PARTS INC.

32451 PARKLANE ST.
GARDEN CITY, MI 48135 USA

WWW.BRITISHONLY.COM
INFO@BRITISHONLY.COM

RETAIL: 1-800-278-6659 ***WHOLESALE: 1-800-852-9253*** ***FAX: 1-734-422-9253***

WORLDS LARGEST SELECTION OF FACTORY ORIGINAL NEW AND USED PARTS

45,000 SQ. FT. OF MOTORCYLE PARTS & ACCESSORIES FROM 1911 TO 1984 FOR ALL BRITISH MAKES!
CASH FOR ALL BRITISH BIKES, PARTS AND LITERATURE

SPECIALIZING IN
VINTAGE MOTORCYLCE PARTS

TRIUMPH
Norton
BSA

THE BIGGEST!

ENGINE REBUILDING PARTS
GASKET - SEALS - BEARINGS
BUSHINGS - PISTONS - RINGS
CLUTCHES - TUNE UP PARTS
SPEED EQUIPMENT

THE BEST!

STOCK AND CUSTOM PARTS
SEATS - HANDLEBARS - CHAINS
TIRES - TUBES - EXHAUST PIPES
MUFFLERS - GAS TANKS - FENDERS
RESTORATION PARTS

THE ONLY!

Central Wheel Components · Barnett Clutches & Cables · Classic Transfers Robert Derrick Ltd · Renold · Lucas · Amal · Emgo Your Powersport Supplier · Brituro England · JP Pistons · Hastings · UH

VELOCETTE • ANDOVER NORTON • TEC • HAYNES • P&P SEATING • WASSELL • MORGO
ALPHA BEARINGS • M.A.C. PRODUCTS • JOE HUNT MAGNETOS • J.J. CABLES • BUCHANAN'S
L.A. SLEEVE • MEGACYCLE CAMS • T.J. WASSELL LIMITED • SUDCO INTERNATIONAL
ACE CLASSICS LONDON • CLASSIC GASKETS • BRITISH WIRING • PBM ENGINEERING
TRI-COR ENGLAND • LEAK PROOF SEALS • MCA (ASTON) LIMITED • GARDNER - WESTCOTT

WE ACCEPT VISA - MASTERCARD - DISCOVER - AMERICAN EXPRESS

PARTS SHIPPED WORDLWIDE !!! VISA · MasterCard · Discover · American Express

VISIT OUR EBAY STORE
http://stores.ebay.com/British-Only-Motorcycles-And-Parts

REPLACEMENT PARTS

FOR

TRIUMPH

MOTOR CYCLES

COMMENCING

ENGINE No.

15809NA

NOVEMBER, 1951

5T	-	SPEED TWIN
6T	-	THUNDERBIRD
TR5	-	TROPHY
T100	-	TIGER 100

TRIUMPH ENGINEERING COMPANY LTD.
MERIDEN WORKS, ALLESLEY
COVENTRY.

Telegrams (for Spares)
"Trusty, Coventry"

Telephone
Meriden 331

ISSUE No. 8

Published November, 1952

PREFACE

BEFORE ordering parts for your machine, please read very carefully the instructions contained in the next paragraph. In a large number of cases, the information given in orders is not sufficient to enable us to identify customers' requirements with certainty. Delay is frequently occasioned by our having to refer the order back for further particulars before we can supply.

HOW TO ORDER. Every part is indicated by number, and this should be quoted together with the description. In order to assist customers, dimensions have been given in many cases where parts are similar. Parts where possible have been listed in order of assembly and a number of the illustrations show the assembly order also. With these aids, there should be no difficulty in identifying the parts you require. Always head your order with the engine number, stamped on the drive side of the crank case underneath the cylinder flange, together with the prefix letters. Use a separate sheet for your order if you are sending a letter as well.

SPECIMEN ORDER

25/6/52

To Triumph Engineering Co. Ltd.,
Meriden Works,
Allesley,
Coventry.

Engine No. 6T-2000NA

Please supply :—

1 - CP.29/20 - Piston Assy. + .020″
1 - E2899 - Guide, inlet valve

*** Send C.O.D.**

Wm. Smith,
1a, Ewell Avenue
Ewell, Surrey.

**For terms of business see page 3.*

TELEGRAPHIC ORDERS. Orders by telegram should be addressed to "Trusty 60221 Coventry". They are then telephoned to us, which prevents delay in delivery. It is only necessary to quote part numbers in telegraphic orders, the description can be omitted.

PATTERNS AND PARTS FOR REPAIR. It is not necessary to send patterns if the part number is quoted. The sending of patterns often delays the order as parcel post or rail takes longer than letter post.

Parts sent to Coventry for repair, replacement or as patterns should bear the sender's name and address and clear instructions should accompany the parts. All parts must be forwarded carriage paid and care should be taken to ensure that all remittances are sent separately and not enclosed with the parts. Fragile units such as cylinders, etc., should always be boxed to avoid damage in transit. Complete machines should have all fitments such as horns, driving mirrors, tools, etc., removed by the sender before despatch, as it is impossible for us to accept responsibility in the event of loss in transit. We are always pleased to give estimates for overhauling and repairs, but should an estimate not be accepted, a charge will be made covering cost of dismantling and re-assembling, if carried out.

All communications relating to spare parts, repairs, replacements and general service should be addressed to the Triumph Engineering Co. Ltd., Meriden Works, Allesley, Coventry, and in order to facilitate quick reference, the quoting of any order number, invoice number or reference from previous communications is of essential importance. **Accessories not of our manufacture should be sent direct to the actual makers, whose names and addresses appear on Page 95.**

WHERE TO OBTAIN. Triumph Spare Parts may be obtained from any Triumph Dealer, and we recommend our customers to place their orders with the Triumph Dealer in their district, as we do not normally supply direct. When parts not usually asked for are required, and for which the Dealer may have to wire or obtain specially, the postage or carriage incurred becomes payable.

We are not able to supply Transfers as originally affixed to Triumph Motor Cycles, but we are at all times willing to supply a transfer denoting that the machine is of genuine Triumph manufacture, provided the Frame and Engine prefix letters and numbers are quoted.

Customers are warned against the risk incurred by purchasing parts that are not of genuine Triumph manufacture. This risk is eliminated if parts are ordered as instructed, either from our recognised Dealers, or direct from the Service Department, Meriden Works, Allesley, Coventry.

TERMS OF BUSINESS

THE most convenient method of paying for Spare Parts is by the C.O.D. system. By this method you pay the postman for the goods when he delivers them to you. As the minimum C.O.D. collection fee is 10d., only goods to the value of 2/- and over can be sent by this system. We do not despatch goods by rail C.O.D.

Where goods are not sent C.O.D., cash must accompany the order. All remittances should be made payable to the Triumph Engineering Co. Ltd., and crossed "Barclay's Bank Ltd." if in the form of Postal Order or cheque. Letters containing currency notes must be registered.

Should a remittance be forwarded by telegraphic money order, the name and address of the sender must be inserted in the space provided on the Post Office requisition form for a private message from remitter to payee. Unless this is complied with the Post Office omit such information from the telegram and we are not then in a position to trace the sender.

Postage, carriage and packing is charged at 7½% on the value of the goods, minimum charge 6d. Packing boxes, cases, crates, etc., are charged for at cost and are returnable.

INDEX

	Page No.
AIR FILTER GROUP	84
BATTERY CARRIER GROUP	50
CARBURETTER GROUP (AMAL)	96
CARBURETTER GROUP (S.U.)	98
CARTON PACK LIST	11
CHAIN GROUP	70
CHAINGUARD GROUP	69
CONTROL CABLE GROUP	77
Air cable	78
Clutch cable	77
Front brake cable	77
Ignition cable	78
Throttle cable	77
CRANKCASE UNDERSHIELD GROUP	50
ENGINE GROUP	18
Connecting rods	24
Crankcase	25
Crankcase bearings	25
Crankcase breather	29
Crankcase oil filter	25
Crankshaft and flywheel assembly	24
Cylinder block	18
Cylinder head and inlet manifold	18
Engine sprocket and shock absorber	30
Oil pump	28
Overhead rocker gear	30
Pistons, Rings, etc.	19
Push rods	29
Push rod cover tube	29
Release valve	28
Rocker oil feed and drain pipes	30
Studs and bolts for crankcase halves	28
Tappet and tappet block	29
Timing cover	28
Timing gear and camshafts	29
Valves, guides and springs	19
ENGINE PLATE GROUP	50
EXHAUST SYSTEM GROUP	31
FOOTREST GROUP	79
FRAME GROUP	43
FRONT FORK GROUP	51
FRONT WHEEL GROUP	57
GASKET SETS	33
GEARBOX GROUP	34
Close ratio gear group	42
Clutch	40
Clutch control	40

	Page No.
Gear control (enclosed footchange)	38
Gear control (selector mechanism)	38
Gearbox casing	34
Gearbox fittings	34
Gearbox shell bearings	35
Gearbox sprocket	40
Kickstarter	38
Shafts and gears	35
Standard ratio gear group	42
Wide ratio gear group	42
GEAR RATIO CHART	116
HANDLEBAR GROUP	74
Air control	75
Clutch control	75
Front brake control	74
Handlebar	74
Throttle control (Triumph)	74
Throttle control (Amal)	74
Magneto control	75
HANDLEBAR GROUP (U.S.A. and Canadian Pattern)	78
LUCAS ELECTRICAL EQUIPMENT GROUP	108
MAGNETO B.T.H. GROUP	102
MUDGUARD GROUP	65
MUDGUARD GROUP (RACING)	94
NUMBER PLATE GROUP	67
PILLION SEAT GROUP	81
PRIMARY CHAINCASE GROUP	67
PROP STAND GROUP	81
RACING T100 KIT GROUP	88
REAR BRAKE CONTROL GROUP	79
REAR CARRIER GROUP	82
REAR SPRING WHEEL GROUP, MARK 2	61
REAR WHEEL GROUP (RIGID)	60
R.P.M. CHART	116
SADDLE GROUP	80
SIDECAR ATTACHMENTS GROUP	81
SPARKING PLUG GROUP	86
SPEEDOMETER GROUP	86
STAND GROUP	56
TANK GROUP	70
Parcel grid	71
Petrol tank	70
Oil tank	71
TOOLBOX GROUP	82
TOOLKIT GROUP	84
TORQUE BRACKET GROUP	43
TWINSEAT GROUP	82

ILLUSTRATION INDEX

	Page
Air filter	85
B.T.H. Magneto armature and condenser	103
B.T.H. Magneto contact breaker and housing	104
B.T.H. Magneto housing and driving gear	105
Carburetter components (AMAL)	97
,, ,, (S.U.)	100
Clutch	41
Crankcase and frame studs, bolts and washers 5T, 6T and T100 ...	48
,, ,, ,, ,, ,, ,, ,, TR5	49
Engine 5T and 6T : Crankcase, cylinder block and head, etc.	20
Engine TR5 and T100 : Crankcase, cylinder block and head, etc. ...	22
Engine 5T, 6T and TR5, T100 : Crankshaft, connecting rods, pistons and timing gears, etc.	26
Exhaust pipes and silencers	32
Frame and components 5T, 6T and T100	44
Frame and components TR5	46
Front wheel arrangement	58
Gearbox	36-37
Handlebar and controls	76
Headlamp, necelle pattern	109
Mudguards	64
Petrol and oil tanks with fittings	72
Primary chain cases and rear chainguards	68
Racing kit T100	92
Rear wheel (Rigid) axle assembly	59
Spring wheel, Mark II	62
Telescopic fork, 5T, 6T and T100	52
Telescopic fork, TR5	54
Toolkit	83

To assist the owner and dealer in identifying requirements, this book contains numerous exploded views of major assemblies. Each component part is numbered and by cross reference to the illustration index, the part number of the component will be found. Against each part number a page and reference number is shown and by referring to the appropriate page, the full description of the part will be found against the reference number.

Example.

To find the part number of a scraper ring for the model 5T.

1. Refer to illustration index above where it will be found that the exploded view of the 5T engine is on page 26.
2. Note that the number of the scraper ring on the illustration is 5.
3. Refer to the index for the illustration in question on page 27.
4. Note that No. 5 is part number GE.29, listed on page 24. Reference line No. 9.

SPEED TWIN

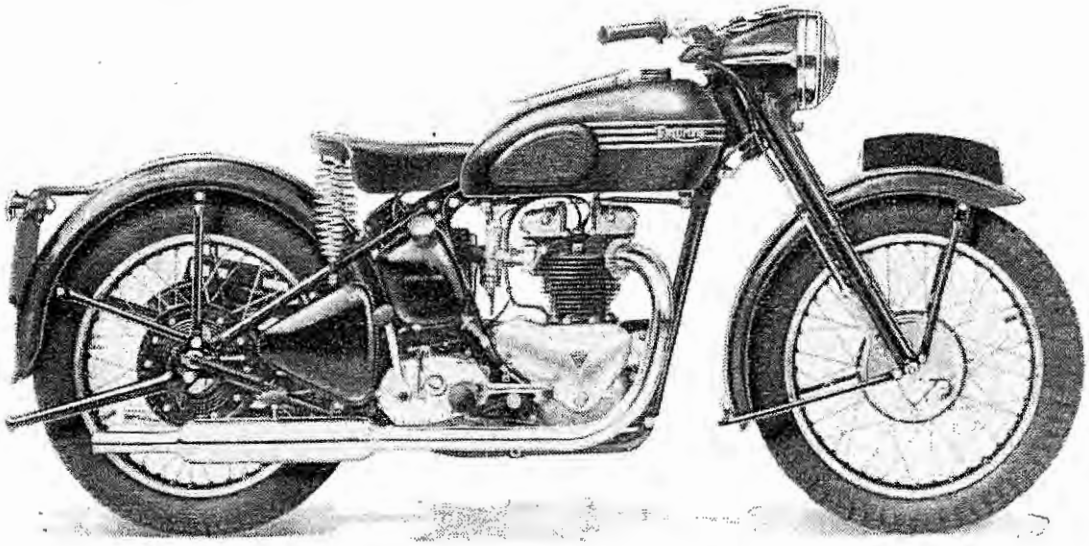

SPECIFICATION

Bore and stroke, mm ...	...63 × 80
Cylinder capacity c/cm (cu. ins.) ...	498 (30.5)
Compression ratio	7 : 1
Engine sprocket, solo	22
Engine sprocket, sidecar	19
Carburetter main jet (Amal) ...	140
Carburetter slide ,, ...	6/3½
Carburetter needle jet ,, ...	107
Tappet clearance, cold ins. (mm)	.001 (.025)
Ignition, fully advanced, ins. (mm)	⅜ (9.5)
Piston ring gap ins. (mm) ...	.010-.014 (.25-.35)
Inlet valve opens, B.T.D.C. ...	26½°
Exhaust valve closes, A.T.D.C. ...	35½°
Petrol tank, gallons (litres) ...	4 (18)
Oil tank, pints (litres)	6 (3.4)
Weight lbs. (dry) (kilos)	365 (165.5)

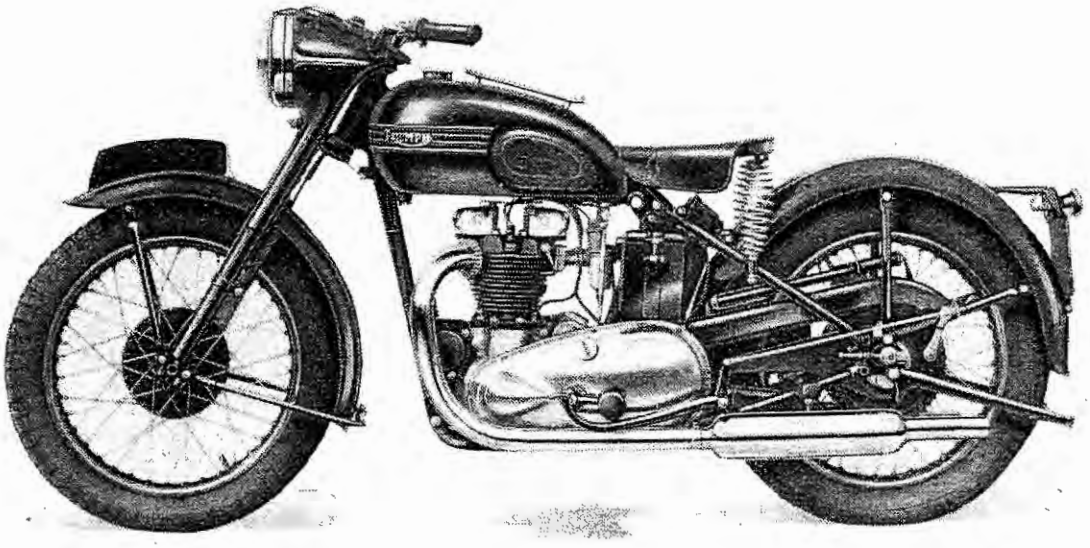

THUNDERBIRD

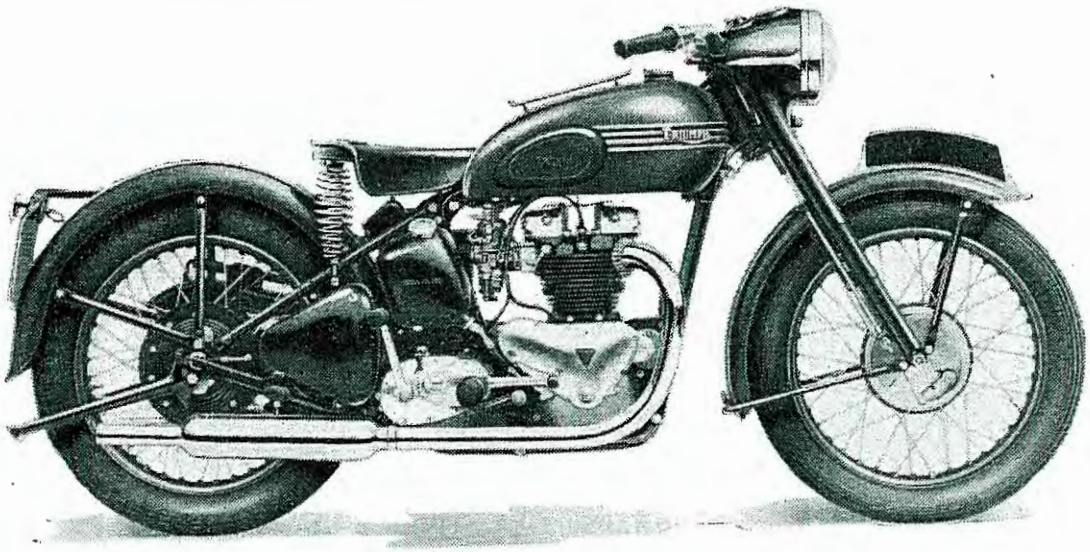

SPECIFICATION

Bore and stroke, mm ...	...71 × 82
Cylinder capacity c/cm (cu. ins.) ...	649 (40)
Compression ratio	7 : 1
Engine sprocket, solo	24
Engine sprocket, sidecar	21
Carburetter (S.U.)	(Type MC2)
Jet needle	M9
Tappet clearance, cold ins. (mm)	.001 (.025)
Ignition, fully advanced, ins. (mm) ...	... $\frac{3}{8}$ (9.5)*
Piston ring gap ins. (mm)	.010-.014 (.25-.35)
Inlet valve opens, B.T.D.C. ...	$26\frac{1}{2}°$
Exhaust valve closes, A.T.D.C. ...	$35\frac{1}{2}°$
Petrol tank, gallons (litres)	4 (18)
Oil tank, pints (litres) ...	6 (3.4)
Weight, lbs. (dry) (kilos)	370 (168)

* When using low octane fuel (pool) reduce to $\frac{5}{16}$ (8.0)

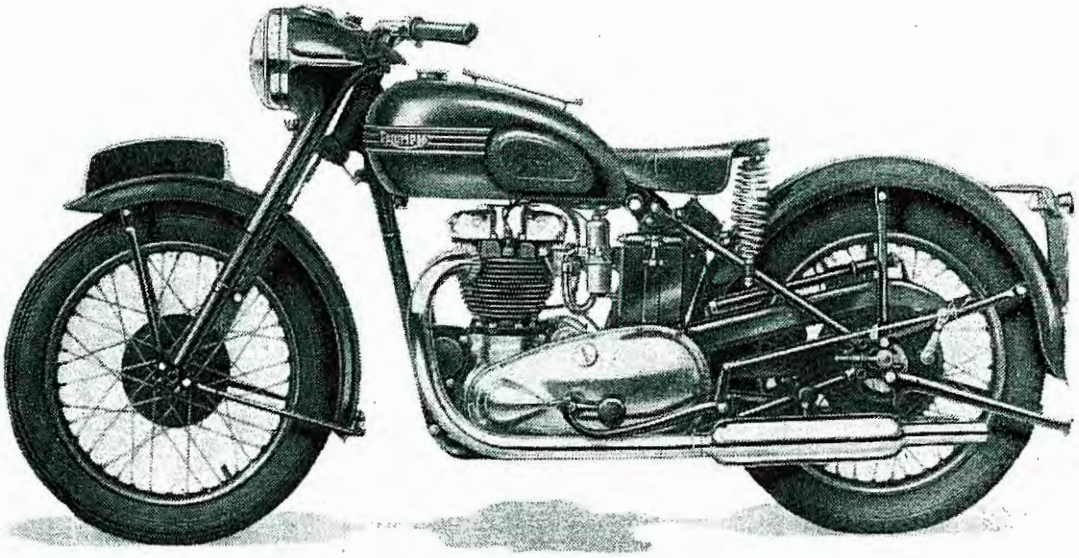

TIGER 100

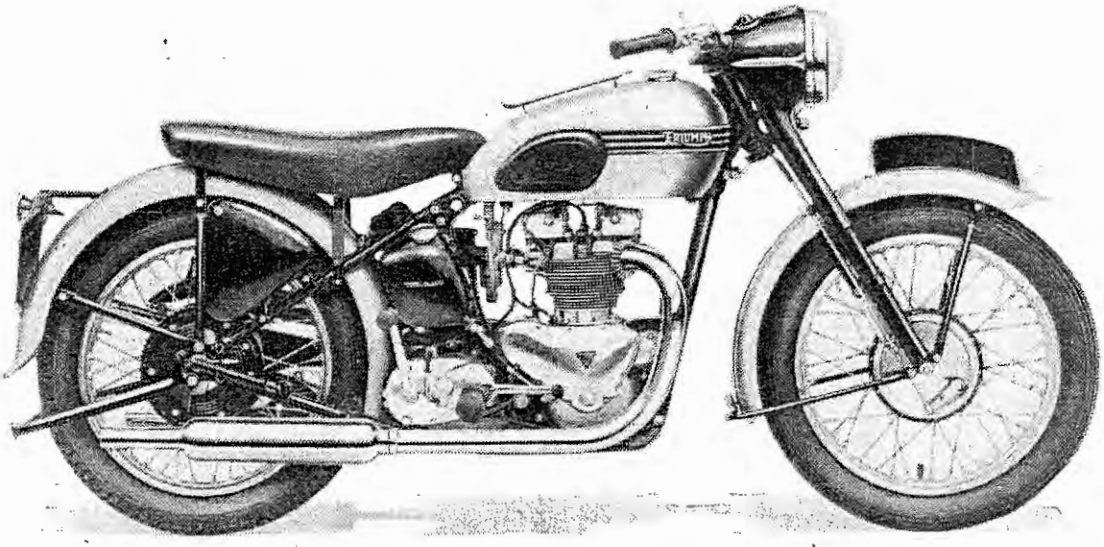

SPECIFICATION

Bore and stroke, mm ...	...63 × 80
Cylinder capacity c/cm (cu. ins.) ...	498 (30.5)
Compression ratio ...	... 7.6:1†
Engine sprocket, solo ...	... 22
Engine sprocket, sidecar ...	... 19
Carburetter main jet (Amal)	... 150*
Carburetter slide ,,	... 6/3½
Carburetter needle jet ,,	... 107

Tappet clearance, cold ins. (mm) ...	.002″ in (.05) ....004″ Ex (.10)
Ignition, fully advanced ins. (mm)	⅜ (9.5)
Piston ring gap ins. (mm)	.010-.014 (.25-.35)
Inlet valve opens, B.T.D.C. ...	26½°
Exhaust valve closes, A.T.D.C. ...	35½°
Petrol tank, gallons (litres)	4 (18)
Oil tank, pints (litres) ...	6 (3.4)
Weight lbs. (dry) (kilos)	355 (160)

*160 without air filter
† 8.1 U.S.A.

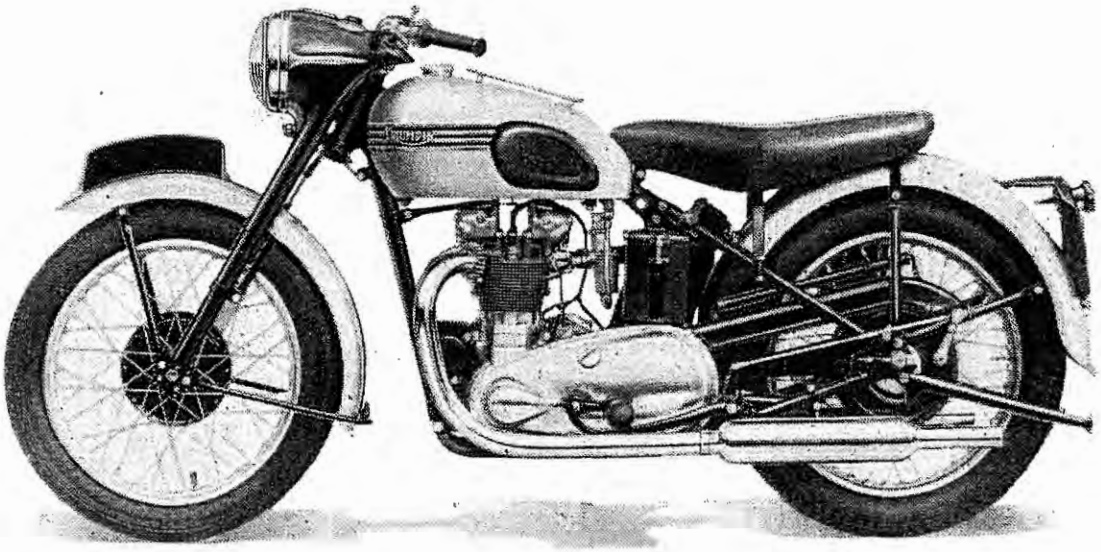

TROPHY

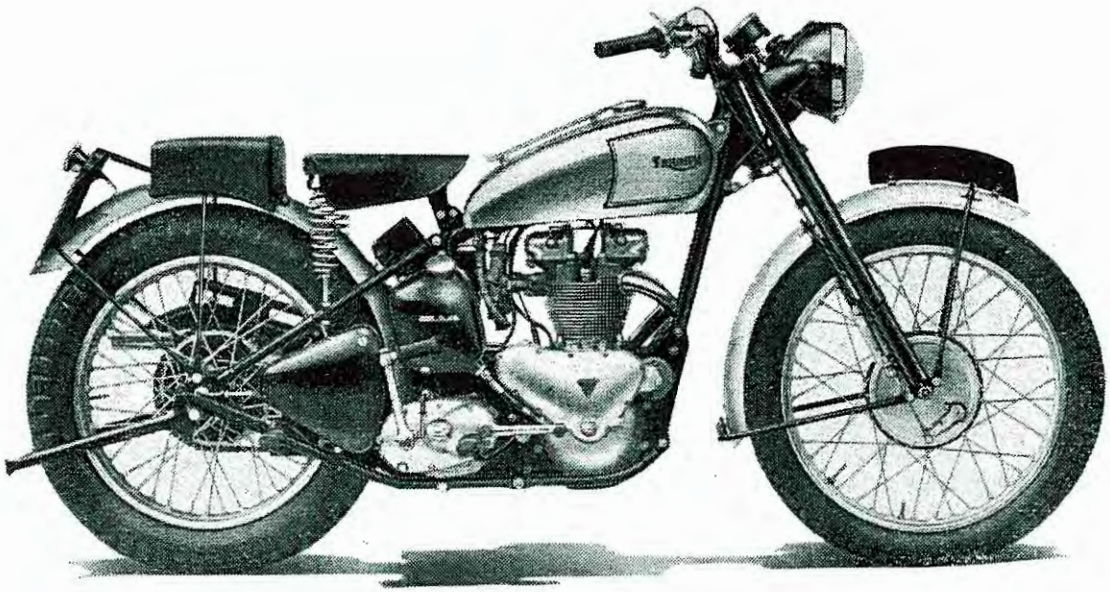

SPECIFICATION

Bore and stroke, mm ...	...63 × 80
Cylinder capacity c/cm. (cu. ins.) ...	498 (30.5)
Compression ratio	6 : 1
Engine sprocket	21
Carburetter main jet (Amal) ...	150
Carburetter slide ... ,, ...	6/3½
Carburetter needle jet ,, ...	107
Tappet clearance, cold ins. (mm) ...	.002″ in (.05) ....004″ Ex. (.10)
Ignition, fully advanced ins. (mm)	⅜ (9.5)
Piston ring gap ins. (mm) ...	.010-.014 (.25-.35)
Inlet valve opens B.T.D.C. ...	26½°
Exhaust valve closes A.T.D.C. ...	35½°
Petrol tank, gallons (litres)	2½ (11.4)
Oil tank, pints (litres) ...	6 (3.4)
Weight lbs. (dry) (kilos)	295 (134)

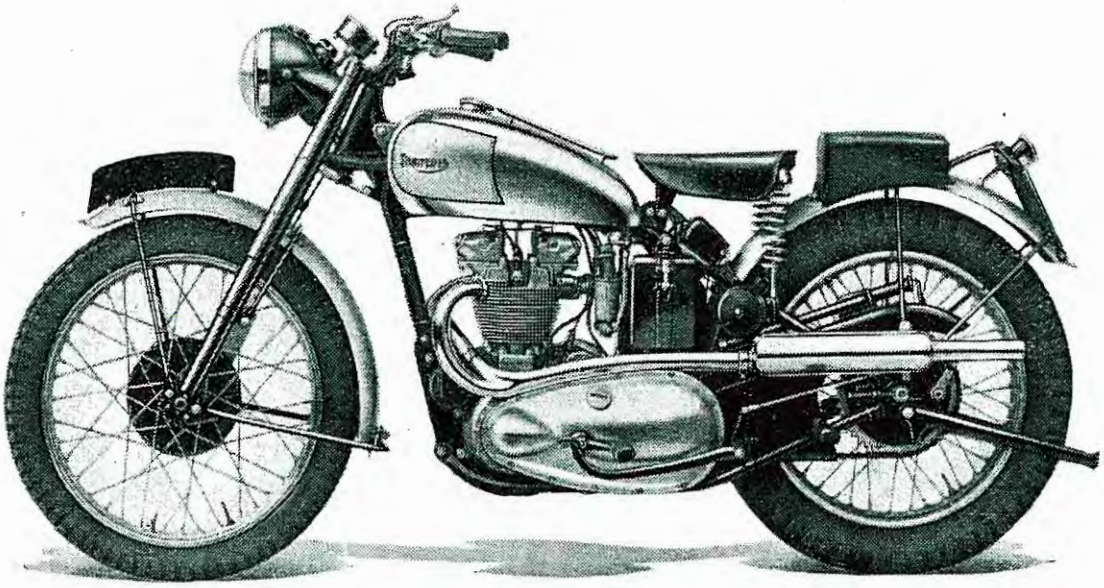

CARTON PACK COMPONENT LIST

The following sub-assemblies are supplied in carton packs under the C.P. part number stated. The contents of these carton packs are preserved and will not deteriorate under adverse conditions.

Part No.		*Description and Contents.*	
Brake Lining			
CP.38	2	NW.243	Lining, brake
	16	W.129	Rivet
CP.66	2	W.631	Lining, brake
	16	W.129	Rivet
Crankcase Bearing			
CP.87	1	E.1591	Bearing, ball d/s
	1	E.2877	Bearing, roller t/s
Fork (Telescopic) Service Pack			
CP.50	2	H.443	Bearing, lower
	2	H.441	Bearing, upper
	2	E.1335	Washer, copper
	4	H.430	Washer, drain filler plug
	2	H.452	Restrictor, oil
	2	H.453	Cup, oil restrictor
	2	H.454	Pin, restrictor cup
	2	H.391	Washer, dust excluder felt
	2	H.420	Washer, outer cover felt
Gears, Wide Ratio			
CP.94	1	T.969	Gear, mainshaft high
	1	T.968	Gear, mainshaft 2nd
	1	T.971	Gear, layshaft high
	1	T.974	Gear, layshaft 2nd
	1	T.934	Gear, speedometer
Gear, Close Ratio			
CP.95	1	T.957	Gear, mainshaft high
	1	T.956	Gear, mainshaft 3rd
	1	T.955	Gear, mainshaft 2nd
	1	T.995	Gear, mainshaft and low
	1	T.959	Gear, layshaft high
	1	T.964	Gear, layshaft 3rd
	1	T.963	Gear, layshaft 2nd
	1	T.961	Gear, layshaft low

SEE SPECIMEN ORDER IN PREFACE

Part No.			*Description and Contents.*
Kickstarter Ratchet Gear			
CP.27	1	T.730	Pinion, kickstarter
	1	T.731	Ratchet, kickstart
	1	T.488/28	Spring and sleeve
	1	T.732	Lockwasher
Pistons			
CP.29	1	E.1563	Piston
	1	E.656	Ring, compression
	1	E.3048	Ring, compression (Taper)
	1	GE.29	Ring, scraper
	1	WE.203E	Pin, gudgeon
	2	WE.479	Circlip
CP.29/10	1	E.1563/10	Piston +.010 inch
	1	E.656/10	Ring, compression
	1	E.3048/10	Ring, compression (Taper)
	1	GE.29/10	Ring, scraper
	1	WE.203E	Pin, gudgeon
	2	WE.479	Circlip
CP.29/20	1	E.1563/20	Piston +.020 inch
	1	E.656/20	Ring, compression
	1	E.3048/20	Ring, compression (Taper)
	1	GE.29/20	Ring, scraper
	1	WE.203E	Pin, gudgeon
	2	WE.479	Circlip
CP.29/40	1	E.1563/40	Piston +.040 inch
	1	E.656/40	Ring, compression
	1	E.3048/40	Ring, compression (Taper)
	1	GE.29/40	Ring, scraper
	1	WE.203E	Pin, gudgeon
	2	WE.479	Circlip
CP.30	1	E.1908	Piston
	1	E.656	Ring, compression
	1	E.3048	Ring, compression (Taper)
	1	GE.29	Ring, scraper
	1	WE.203E	Pin, gudgeon
	2	WE.479	Circlip
CP.30/10	1	E.1908/10	Piston +.010 inch
	1	E.656/10	Ring, compression
	1	E.3048/10	Ring, compression (Taper)
	1	GE.29/10	Ring, scraper
	1	WE.203E	Pin, gudgeon
	2	WE.479	Circlip

TREASURY NOTES MUST BE REGISTERED

Part No.	*Description and Contents.*		
CP.30/20	1	E.1908/20	Piston +.020 inch
	1	E.656/20	Ring, compression
	1	E.3048/20	Ring, compression (Taper)
	1	GE.29/20	Ring, scraper
	1	WE.203E	Pin, gudgeon
	2	WE.479	Circlip
CP.37	1	E.1969	Piston
	1	E.656	Ring, compression
	1	E.3048	Ring, compression (Taper)
	1	GE.29	Ring, scraper
	1	WE.203E	Pin, gudeon
	2	WE.479	Circlips
CP.37/10	1	E.1969/10	Piston +.010 inch
	1	E.656/10	Ring, compression
	1	E.3048/10	Ring, compression (Taper)
	1	GE.29	Ring, scraper
	1	WE.203E	Pin, gudgeon
	2	WE.479	Circlips
CP.37/20	1	E.1969/20	Piston +.020 inch
	1	E.656/20	Ring, compression
	1	E.3048/20	Ring, compression (Taper)
	1	GE.29	Ring, scraper
	1	WE.203E	Pin, gudgeon
	2	WE.479	Circlips
CP.69	1	E.2671	Piston
	1	E.656	Ring, compression
	1	E.3048	Ring, compression (Taper)
	1	GE.29	Ring, scraper
	1	WE.203E	Pin, gudgeon
	2	WE.479	Circlip
CP.70	1	E.2489	Piston
	1	E.656	Ring, compression
	1	E.3048	Ring, compression (Taper)
	1	GE.29	Ring, scraper
	1	WE.203E	Pin, gudgeon
	2	WE.479	Circlips
CP.92	1	E.2884	Piston
	1	E.656	Ring, compression
	1	E.3048	Ring, compression (Taper)
	1	GE.29	Ring, scraper
	1	WE.203E	Pin, gudgeon
	2	WE.479	Circlip

WHEN IN DOUBT SEND SAMPLE

Part No.			*Description and Contents.*
CP.98	1	E.2891	Piston
	1	E.2897	Ring, compression
	1	E.3049	Ring, compression (Taper)
	1	E.2898	Ring, scraper
	1	WE.203E	Pin, gudgeon
	2	WE.479	Circlip
CP.98/10	1	E.2891/10	Piston +.010 inch
	1	E.2897/10	Ring, compression
	1	E.3049/10	Ring, compression (Taper)
	1	E.2898/10	Ring, scraper
	1	WE.203E	Pin, gudgeon
	2	WE.479	Circlip
CP.98/20	1	E.2891/20	Piston +.020 inch
	1	E.2897/20	Ring, compression
	1	E.3049/20	Ring, compression (Taper)
	1	E.2898/20	Ring, scraper
	1	WE.203E	Pin, gudgeon
	2	WE.479	Circlip
CP.98/40	1	E.2891/40	Piston +.040 inch
	1	E.2897/40	Ring, compression
	1	E.3049/40	Ring, compression (Taper)
	1	E.2898/40	Ring, scraper
	1	WE.203E	Pin, gudgeon
	2	WE.479	Circlip
CP.108	1	E.3000	Piston
	1	E.2897	Ring, compression
	1	E.3049	Ring, compression (Taper)
	1	E.2898	Ring, scraper
	1	WE.203E	Pin, gudgeon
	2	WE.479	Circlip
CP.109	1	E.3052	Piston
	1	E.656	Ring, compression
	1	E.3048	Ring, compression (Taper)
	1	GE.29	Ring, scraper
	1	WE.203E	Pin, gudgeon
	2	WE.479	Circlip
CP.109/20	1	E.3052/20	Piston +.020 inch
	1	E.656/20	Ring, compression
	1	E.3048/20	Ring, compression (Taper)
	1	GE.29/20	Ring, scraper
	1	WE.203E	Pin, gudgeon
	2	WE.479	Circlip

DO NOT FORGET TO SIGN YOUR ORDER

Part No.		*Description and Contents.*	
CP.115	1	E.3098	Piston
(U.S.A. Only)	1	E.656	Ring, compression
	1	E.3048	Ring, compression (Taper)
	1	GE.29	Ring, scraper
	1	WE.203E	Pin, gudgeon
	2	WE.479	Circlip
CP.115/10	1	E.3098/10	Piston +.010 inch
	1	E.656/10	Ring, compression
	1	E.3048/10	Ring, compression (Taper)
	1	GE.29/10	Ring, scraper
	1	WE.203E	Pin, gudgeon
	2	WE.479	Circlip
CP.115/20	1	E.3098	Piston +.020 inch
	1	E.656/20	Ring, compression
	1	E.3048/20	Ring, compression (Taper)
	1	GE.29/20	Ring, scraper
	1	WE.203E	Pin, gudgeon
	2	WE.479	Circlip
Piston Rings			
CP.40	2	E.656	Ring, compression
	2	E.3048	Ring, compression (Taper)
	2	GE.29	Ring, scraper
CP.40/10	2	E.656/10	Ring, compression
	2	E.3048/10	Ring, compression (Taper)
	2	GE.29/10	Ring, scraper
CP.40/20	2	E.656/20	Ring, compression
	2	E.3048/20	Ring, compression (Taper)
	2	GE.29/20	Ring, scraper
CP.40/40	2	E.656/40	Ring, compression
	2	E.3048/40	Ring, compression (Taper)
	2	GE.29/40	Ring, scraper
CP.99	2	E.2897	Ring, compression
	2	E.3049	Ring, compression (Taper)
	2	E.2898	Ring, scraper
CP.99/10	2	E.2897/10	Ring, compression
	2	E.3049/10	Ring, compression (Taper)
	2	E.2898/10	Ring, scraper

SEE SPECIMEN ORDER IN PREFACE

Part No.			*Description and Contents.*
CP.99/20	2	E.2897/20	Ring, compression
	2	E.3049/20	Ring, compression (Taper)
	2	E.2898/20	Ring, scraper
CP.99/40	2	E.2897/40	Ring, compression
	2	E.3049/40	Ring, compression (Taper)
	2	E.2898/40	Ring, scraper

Mudguards

CP.106	Racing Mudguard, Front	(See Page 94)
CP.107	Racing Mudguard, Rear	(See Page 94)

Racing Kit

CP.100	Racing Kit	(See Page 88)
CP.101	Racing Kit	(See Page 88)

Spring Wheel Spring Set

CP.67	1	W.837	Spring, inner main
	1	W.836	Spring, outer main
	1	W.890	Spring, rebound
	2	W.941	Locator plate
	2	W.658	Buffer

Spring Wheel Slipper Pads

CP.89	1	W.935	Pad, slipper (convex)
	1	W.936	Pad, slipper (concave)
	4	W.866	Shim .002″ thick
	2	W.867	Shim .003″ thick

Sidecar Connections

CP.14	1	F.2587	Connection, front
	1	F.2600	Bolt
	2	F.1746	Nut, sleeved
	1	F.2601	Connection, rear
	2	F.1743	Stud
	2	S.1-5	Nut
	2	KF.365	Washer, spring
	1	F.1747	Nut

Steering Races

CP.56	2	XS.10	Cup
	1	H.433	Cone
	1	XS.8	Cone
	44	S.70-4	Ball

ALWAYS QUOTE ENGINE NUMBER AND PREFIX

Part No.		*Description and Contents.*	
CP.57	1	H.437	Cup
	1	H.111	Cup
	1	H.438	Cone
	1	H.439	Cone
	22	S.70-4	Ball
	20	S.70-3	Ball
Valves			
CP.6	2	E.1955	Valve, inlet
	2	E.1956	Valve, exhaust
CP.96	2	E.2903	Valve, inlet
	2	E.2904	Valve, exhaust
CP.103	2	E.2969	Valve, inlet
	2	E.1956	Valve, exhaust
Valve Guides			
CP.97	2	E.2899	Guide, inlet
	2	E.2900	Guide, exhaust
Valve Springs			
CP.5	4	E.1488	Spring, inner
	4	E.1487	Spring, outer
CP.102	2	E.3001	Spring, valve inner
	2	E.3002	Spring, valve outer

SEE SPECIMEN ORDER IN PREFACE

REPLACEMENT PARTS

ENGINE GROUP

REF. No.	PART No.	DESCRIPTION	5T	6T	TR5	T100
		CYLINDER BLOCK				
1	E2927	Block, cylinder	1	—	—	—
2	E2895	,, ,, ...	—	1	—	—
3	E2958	,, ,, ...	—	—	1	1
4	E2249	Washer, cylinder base	1	—	1	1
5	E2894	,, ,, ,, ...	—	1	—	—
		CYLINDER HEAD AND INLET MANIFOLD				
6	E2928	Head, cylinder c/w guides	1	—	—	—
8	E2896	,, ,, ,, ,, ...	—	1	—	—
9	E3021	,, ,, ,, ,, ...	—	—	1	—
10	E3005	,, ,, ,, ,, ...	—	—	—	1
11	E2961	Adaptor, exhaust pipe	—	—	—	2
12	E2248	Gasket, cylinder head	1	—	—	—
13	E2905	,, ,, ,, ...	—	1	—	—
14	E3003	,, ,, ,, ...	—	—	1	1
15	E327	Bolt, cylinder head short	4	4	—	—
16	E1484	,, ,, ,, medium	2	2	—	—
17	E1596	,, ,, ,, long	2	2	—	—
18	E1596A	,, ,, ,, (torque)	—	—	—	2
19	E2873	,, ,, ,, short	—	—	4	4
20	E2874	,, ,, ,, long	—	—	4	2
21	GS308	Washer, cylinder head bolt	4	4	—	—
22	F2184	,, ,, ,, ,, ...	—	—	7	8
23	E1554	Stud, inlet manifold to head	4	—	—	—
24	E2920	,, ,, ,, ,, ,, ...	—	4	—	—
25	E2972	,, ,, ,, ,, ,, long	—	—	2	2
26	E2973	,, ,, ,, ,, ,, short	—	—	2	2
27	E1456	Manifold, inlet	1	—	—	—
28	E3074	,, ,, ...	—	1	—	—
29	E2991	,, ,, ...	—	—	1	—
30	E2991T	,, ,, ...	—	—	—	1
31	E1552	Washer, inlet manifold joint	2	—	—	—
32	E1676	,, ,, ,, ,, ...	—	2	—	—
33	E2967	,, ,, ,, ,, ...	—	—	2	2
34	W103	Nut, inlet manifold to head	4	3	4	4
35	F879	,, ,, ,, ,, ,, ...	—	1	—	—
36	S25-13	Washer, inlet manifold to head	4	5	4	4
37	E1553	Stud, carburetter fixing	2	2	—	—
38	E2962	,, ,, ,, ...	—	—	2	2
39	S1-51	Nut, ,, ,, ...	2	2	2	2
40	S25-3	Washer, carburetter fixing	1	2	1	1

WHEN IN DOUBT SEND SAMPLE

REF. No.	PART No.	DESCRIPTION	5T	6T	TR5	T100
		VALVES, GUIDES AND SPRINGS				
1	E1955	Valve, inlet	2	—	—	—
2	E2903	,, ,, ...	—	2	—	—
3	E2969	,, ,, ...	—	—	2	2
4	E1956	Valve, exhaust	2	—	2	2
5	E2904	,, ,, ...	—	2	—	—
6	E2899	Guide, inlet valve	2	2	2	2
7	E2900	,, exhaust valve	2	2	2	2
8	E1488	Spring, inner valve	4	4	4	4
9	E1487	Spring, outer valve	4	4	4	4
10	E1543	Collar, valve spring top	4	4	4	4
11	E1544	Cup, valve spring bottom	4	4	4	4
12	WE259A	Cotter, valve split	8	8	8	8
		PISTONS, RINGS, Etc.				
13	E1563	Piston body, standard CR7:1	2	—	—	—
14	E1563/10	,, ,, +.010″ ,, ...	2	—	—	—
15	E1563/20	,, ,, +.020″ ,, ...	2	—	—	—
16	E1563/40	,, ,, +.040″ ,, ...	2	—	—	—
17	E2891	,, ,, standard ,, ...	—	2	—	—
18	E2891/10	,, ,, +.010″ ,, ...	—	2	—	—
19	E2891/20	,, ,, +.020″ ,, ...	—	2	—	—
20	E2891/40	,, ,, +.040″ ,, ...	—	2	—	—
21	E3000	,, ,, standard CR8.5:1	—	2	—	—
22	E3000/10	,, ,, +.010″ ,, ...	—	2	—	—
23	E3000/20	,, ,, +.020″ ,, ...	—	2	—	—
24	E3000/40	,, ,, +.040″ ,, ...	—	2	—	—
25	E1969	,, ,, standard CR6:1	—	—	2	—
26	E1969/10	,, ,, +.010″ ,, ...	—	—	2	—
27	E1969/20	,, ,, +.020″ ,, ...	—	—	2	—
28	E3052	,, ,, standard CR5:1	—	—	2	—
29	E3052/10	,, ,, +.010″	—	—	2	—
30	E3052/20	,, ,, +.020″ ,, ...	—	—	2	—
31	E1908	,, ,, standard CR7.6:1	—	—	—	2
32	E1908/10	,, ,, +.010″ ,, ...	—	—	—	2
33	E1908/20	,, ,, +.020″ ,, ...	—	—	—	2
34	*E3098	,, ,, standard CR8:1	—	—	—	2
35	*E3098/10	,, ,, +.010″ ,, ...	—	—	—	2
36	*E3098/20	,, ,, +.020″ ,, ...	—	—	—	2
37	E656	Ring, piston compression standard	2	—	2	2
38	E656/10	,, ,, ,, —.010″	2	—	2	2
39	E656/20	,, ,, ,, —.020″	2	—	2	2
40	E656/40	,, ,, ,, —.040″	2	—	—	—
41	E3048	,, ,, ,, standard (Taper) ...	2	—	2	2
42	E3048/10	,, ,, ,, —.010″ ,, ...	2	—	2	2
43	E3048/20	,, ,, ,, —.020″ ,, ...	2	—	2	2
44	E3048/40	,, ,, ,, —.040″ ,, ...	2	—	—	—

**Fitted standard to T100 Machines supplied to the U.S.A.*

SEE PAGES 11-17 FOR CARTON PACKS

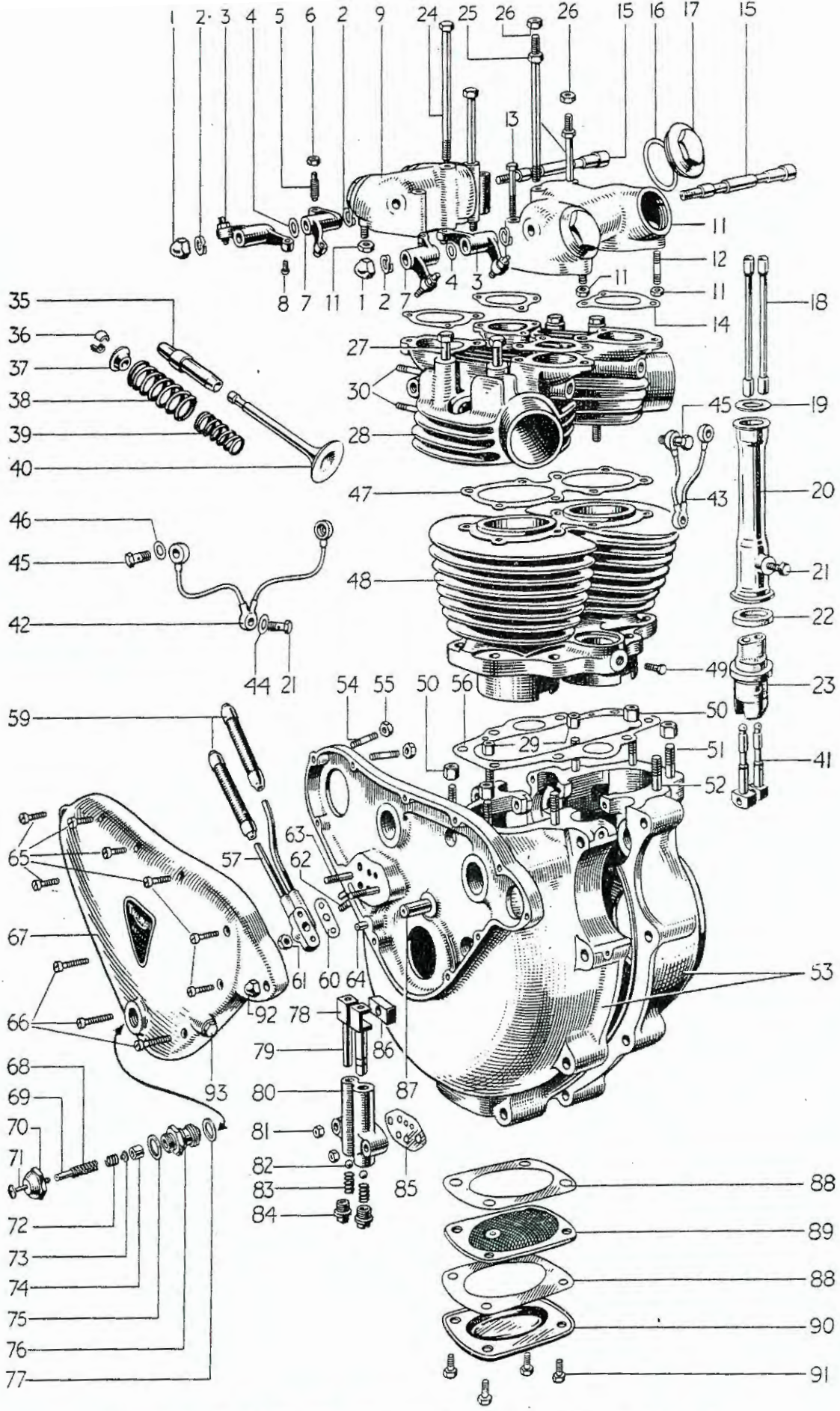

ENGINE 5T AND 6T—CRANKCASE, CYLINDER BLOCK, CYLINDER HEAD, ETC.

5T AND 6T MODELS
INDEX TO ILLUSTRATION ON PAGE 20

Illust. No.	Part No.	Page No.	Ref. No.
1	E.1435	30	22
2	E.1574	30	20
3	E.1458	30	14
4	E.1575	30	19
5	E.1513	30	16
6	E.470	30	17
7	E.1457	30	13
8	E.1483	30	15
9	E.1461T	30	1
10	E.1462T	30	2
11	F.879	30	6
12	E.1540	30	4
13	E.1545	30	10
14	E.1650	30	3
15	E.1512	30	21
16	E.1577	30	9
17	E.1564	30	8
18	E.1693	29	27
19	E.1497	29	33
20	E.1505	29	29
21	E.984	30	32
22	E.1496	29	32
23	E.1477	29	22
24	E.1484	18	16
25	E.1596	18	17
26	S1.52	43	36
27	E.327	18	15
28	E.2928	18	6
	E.2896	18	8
29	W.76	25	5
30	E.1554	18	23
	E.2920	18	24
35	E.2899(IN)	19	6
	E.2900(EX)	19	7
36	WE.259A	19	12
37	E.1543	19	10
38	E.1487	19	9
39	E.1488	19	8
40	E.1955(IN)	19	1
	E.1956(EX)	19	4
	E.2903(IN)	19	2
	E.2904(EX)	19	5
41	E.3059	29	21
42	GS.273	30	28
43	GS.272	30	27
44	F.1880	30	33
45	E.1601	30	29
46	E.1335	30	31
47	E.2248	18	12
	E.2905	18	13
48	E.2927	18	1
	E.2895	18	2
49	H.200	29	25
50	PO.172A	25	6
51	E.672	25	3
52	E.1614	25	4
53	E.2219/20A	25	1
	E.2892/2	25	2
54	E.2022	25	12
55	F.1008	25	13
56	E.2249	18	4
	E.2894	18	5
57	E.1526	73	8
59	MF.119	73	13
60	E.1529	73	10
61	S.1-51	73	1
62	E.1539	25	15
63	E.1536	25	20
64	E.1535	25	19
65	E.427	28	40
66	E.1049	28	41
67	E.2218/5T	28	27
	E.2218/6T	28	28
68	E.2788	28	22
70	E.2790	28	19
71	E.2791	28	23
72	E.2789	28	25
73	E.2792	28	26
74	GS.251	28	18
75	GS.254	28	21
76	E.2794	28	17
77	E.1670	28	20
78	GS.153	28	9
79	E.1476	28	10
80	GS.35	28	8
81	F.879	25	21
82	S.70-7	28	12
83	E.403	28	13
84	E.2360	28	14
85	E.1537	28	15
86	E.495	28	11
87	E.375	29	11
88	E.487	25	28
89	E.529	25	27
90	E.486	25	29
91	MT.63	25	30
92	E.2228	108	24
93	E.2615	28	37

FOR IDENTIFICATION OF PARTS SEE PAGE 6

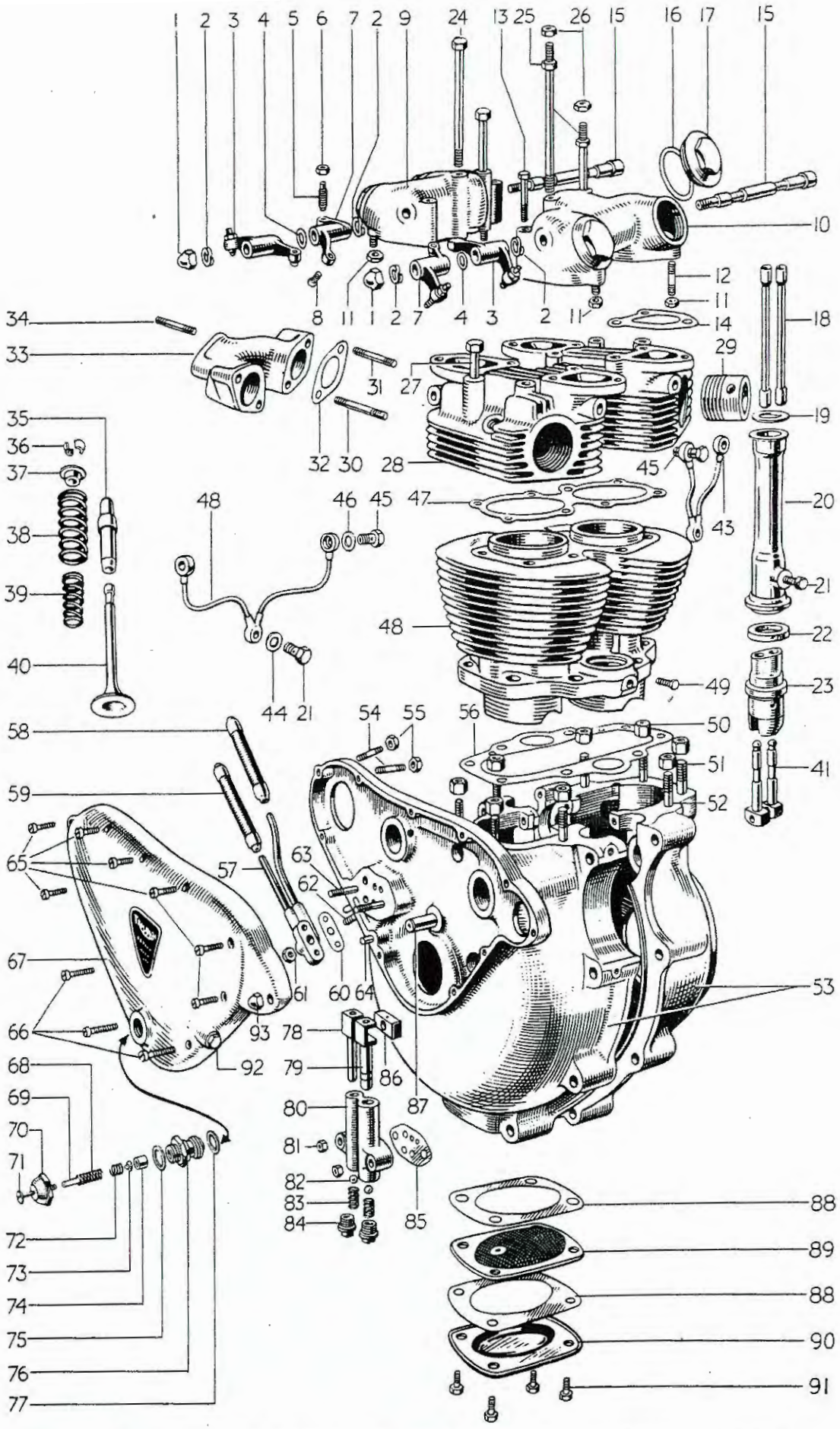

ENGINE TR5 AND T100—CRANKCASE, CYLINDER BLOCK AND CYLINDER HEAD, ETC.

TR5 AND T100 MODELS
INDEX TO ILLUSTRATION ON PAGE 22

Illust. No.	Part No.	Page No.	Ref. No.
1	E.1435	30	22
2	E.1574	30	20
3	E.1458	30	14
4	E.1575	30	19
5	E.1513	30	16
6	E.470	30	17
7	E.1457	30	13
8	E.1483	30	15
9	E.1461T	30	1
10	E.1462T	30	2
11	F.879	30	6
12	E.2980	30	5
13	E.2982	30	11
14	E.1650	30	3
15	E.1512	30	21
16	E.1577	30	9
17	E.1564	30	8
18	E.2620	29	28
19	E.1497	29	33
20	E.2804	29	30
	E.1505	29	29
21	E.984	30	32
22	E.2425	29	31
	E.1496	29	32
23	E.2803	29	23
	GS.36	29	24
24	E.2874	18	20
25	E.1596A	18	18
26	SI.52	43	36
27	E.2873	18	19
28	E.3021	18	9
	E.3005	18	10
29	E.2961	18	11
30	E.2972	18	25
31	E.2973	18	26
32	E.2967	18	33
33	E.2991	18	29
	E.2991T	18	30
34	E.2962	18	38
35	E.2899(IN)	19	6
	E.2900(EX)	19	7
36	WE.259A	19	12
37	E.1543	19	10
38	E.1487	19	9
39	E.1488	19	8
40	E.2969(IN)	19	3
	E.1956(EX)	19	4
41	E.3059	29	21
42	GS.273	30	28
43	GS.272	30	27
44	F.1880	30	33
45	E.2767	30	30
46	E.1335	30	31
47	E.3003	18	14
48	E.2958	18	3
49	H.200	29	25
50	E.2412	25	7
51	E.672	25	3
52	E.1614	25	4
53	E.2219/20A	25	1
54	E.2022	25	12
55	F.1008	25	13
56	E.2249	18	4
57	E.2799	73	9
	E.1526	73	8
58	MF.119	73	13
59	MF.119A	73	14
60	E.1529	73	10
61	S.1-51	73	11
62	E.1539	25	15
63	E.1536	25	20
64	E.1535	25	19
65	E.427	28	40
66	E.1049	28	41
67	E.2218/TR5	28	29
	E.2218/T100	28	30
68	E.2788	28	22
69	E.2793	28	24
70	E.2790	28	19
71	E.2791	28	23
72	E.2789	28	25
73	E.2792	28	26
74	GS.251	28	18
75	GS.254	28	21
76	E.2794	28	17
77	E.1670	28	20
78	GS.153	28	9
79	E.1476	28	10
80	GS.35	28	8
81	F.879	25	21
82	S.70-7	28	12
83	E.403	28	13
84	E.2360	28	14
85	E.1537	28	15
86	E.495	28	11
87	E.375	29	11
88	E.487	25	28
89	E.529	25	27
90	E.486	25	29
91	MT.63	25	30
92	E.2615	28	37
93	E.2228	108	24

FOR IDENTIFICATION OF PARTS SEE PAGE 6

REF. No.	PART No.	DESCRIPTION	5T	6T	TR5	T100
1	E2897	Ring, piston compression standard	—	2	—	—
2	E2897/10	,, ,, ,, —.010″	—	2	—	—
3	E2897/20	,, ,, ,, —.020″	—	2	—	—
4	E2897/40	,, ,, ,, —.040″	—	2	—	—
5	E3049	,, ,, ,, standard (Taper) ...	—	2	—	—
6	E3049/10	,, ,, ,, —.010″ ,, ...	—	2	—	—
7	E3049/20	,, ,, ,, —.020″ ,, ...	—	2	—	—
8	E3049/40	,, ,, ,, —.040″ ,, ...	—	2	—	—
9	GE29	,, ,, scraper standard	2	—	2	2
10	GE29/10	,, ,, ,, —.010″	2	—	2	2
11	GE29/20	,, ,, ,, —.020″	2	—	2	2
12	GE29/40	,, ,, ,, —.040″	2	—	—	—
13	E2898	,, ,, ,, standard	—	2	—	—
14	E2898/10	,, ,, ,, —.010″	—	2	—	—
15	E2898/20	,, ,, ,, —.020″	—	2	—	—
16	E2898/40	,, ,, ,, —.040″	—	2	—	—
17	WE203E	Pin, gudgeon	2	2	2	2
18	WE479	,, ,, ...	4	4	4	4

CRANKSHAFT AND FLYWHEEL ASSEMBLY

19	E2984	Crankshaft and flywheel assembly	1	—	1	—
20	E2911	,, ,, ,, ,, ...	—	1	—	—
21	E2984T	,, ,, ,, ,, ...	—	—	—	1
22	E2918	Flywheel	1	—	1	—
23	E2908	,, ...	—	1	—	—
24	E2918T	,, ...	—	—	—	1
25	E2915	Crankshaft, timing side	1	—	1	1
26	E2902	,, ,, ,, ...	—	1	—	—
27	E2200	Crankshaft, driving side	—	—	—	—
28	E2914	,, ,, ,, ...	1	—	1	1
29	E2901	,, ,, ,, ...	—	1	—	—
30	E393	Plug, crankshaft	1	1	1	1
31	E1562	Bolt, ,, to flywheel	6	6	6	6
32	W103	Nut, ,, to flywheel bolt	6	6	6	6

CONNECTING RODS

33	E2921	Rod, connecting	2	2	2	—
34	E2921T	,, ,, ...	—	—	—	2
35	E1511	Bush, ,, rod small end	2	2	2	2
36	E2490A	Bolt, ,, ,, to cap	4	4	4	4
37	E2922	Nut, ,, ,, to cap bolt	4	4	4	4

SEE PAGES 11-17 FOR CARTON PACKS

REF No.	PART No.	DESCRIPTION	5T	6T	TR5	T100
		CRANKCASE				
1	E2219/20A	Crankcase assembly less main bearings ...	1	—	1	1
2	E2892/3	,, ,, ,, ,, ,, ...	—	1	—	—
3	E672	Stud, crankcase cylinder base	6	6	6	6
4	E1614	,, ,, ,, ,, (Dowel) ...	2	2	2	2
5	W76	Nut ,, ,, ,, stud	4	4	—	—
6	PO172A	,, ,, ,, ,, ,, ...	4	4	—	—
7	E2412	,, ,, ,, ,, ,, ...	—	—	8	8
8	GS308	Washer, ,, ,, ,, ,, ...	—	—	8	8
9	E1534A	Dowel, ,, ,, ,, ,, (E1614) ...	2	2	2	2
10	E1579	Dowel, crankcase halves	1	1	1	1
11	E1534A	,, ,, ,, hollow	1	1	1	1
12	E2022	Stud, magneto to crankcase	3	3	3	3
13	F1008	Nut, ,, ,, ,, stud	3	3	3	3
14	S25-3	Washer, magneto to crankcase stud	3	3	3	3
15	E1539	Stud, oil junction block	1	1	1	1
16	S1-51	Nut, ,, ,, ,, stud	1	1	1	1
17	S23-3	Washer, oil junction block stud	1	1	1	1
18	E1532	Dowel, oil junction block stud	1	1	1	1
19	E1535	Dowel, crankcase to timing cover	1	1	1	1
20	E1536	Stud, oil pump fixing	2	2	2	2
21	F879	Nut, oil pump fixing stud	2	2	2	2
22	E2312	Washer, oil pump fixing stud	2	2	2	2
24	E1508	Pipe, crankcase oil return	1	1	1	1
25	E1509	Clip, ,, ,, ,, pipe	1	1	1	1
26	E2645	Screw, crankcase oil return pipe	1	1	1	1
		CRANKCASE OIL FILTER				
27	E529	Filter, crankcase oil	1	1	1	1
28	E487	Washer, ,, ,, filter joint	2	2	2	2
29	E486	Cover, ,, ,, ,, ,, ...	1	1	1	1
30	MT63	Bolt, ,, ,, ,, ...	4	4	4	4
31	S26-2	Washer, ,, ,, ,, spring	4	4	4	4
		CRANKCASE BEARINGS				
32	E2877	Bearing, crankcase timing side (roller) ...	1	1	1	1
33	E1591	Bearing, crankcase driving (ball)	1	1	1	1
34	E2883	Chip shield, timing side bearing	1	1	1	1
35	E2296	Disc, timing side bearing	1	1	1	1
36	E489	Ring, ,, ,, ,, retaining	1	1	1	1
37	E1479	Bush, ,, ,, camshaft	2	2	2	2
38	E1516	,, driving side camshaft	1	1	1	1
39	E2260	,, ,, ,, ,, (breather) ...	1	1	1	1
40	E2311	Pin, timing ,, ,, ,, ...	1	1	1	1

WHEN IN DOUBT SEND SAMPLE

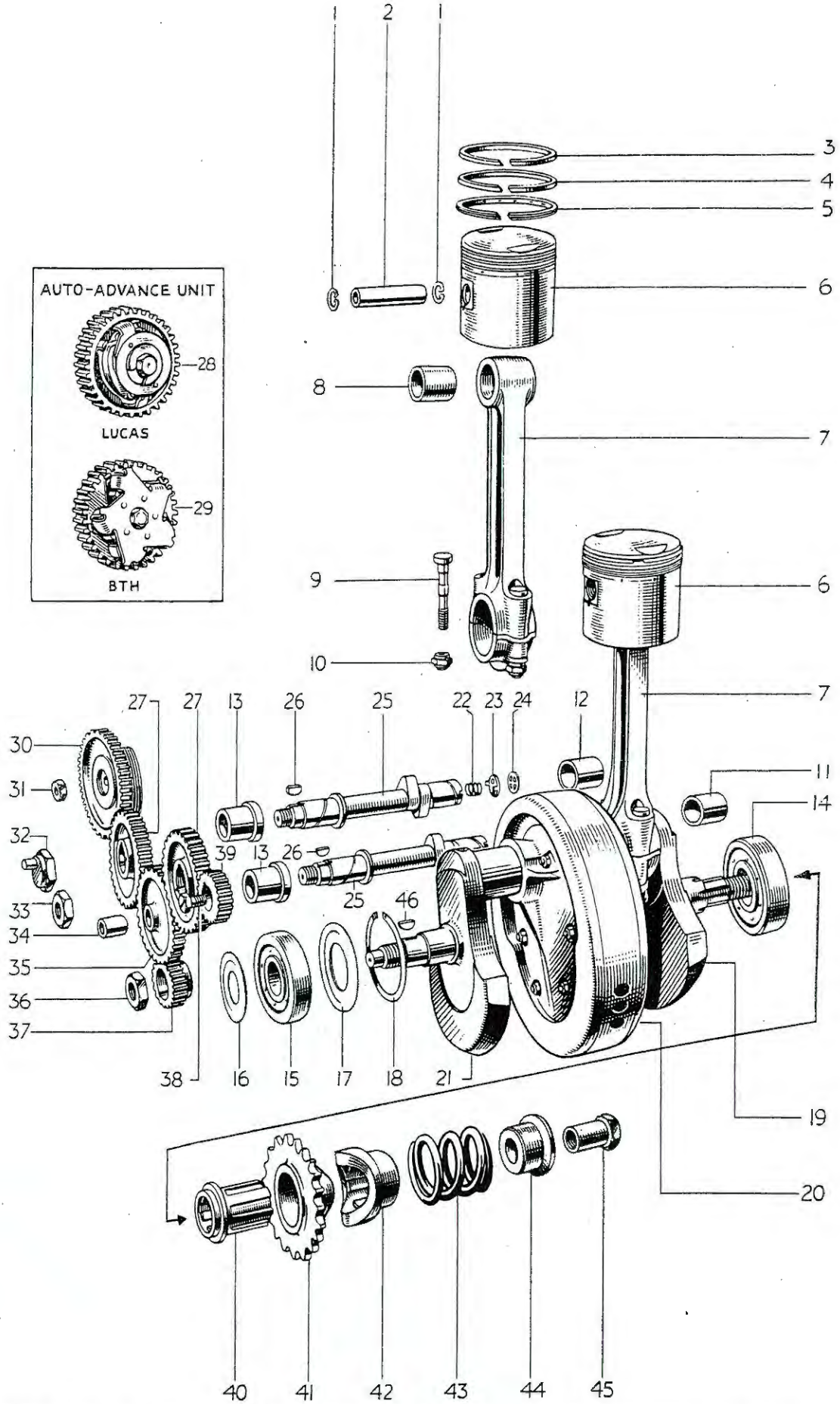

ENGINE 5T, 6T, TR5 AND T100—CRANKSHAFT, CONNECTING RODS, PISTONS, TIMING GEAR, ETC.

5T, TR5 & T100 MODELS
INDEX TO ILLUSTRATION ON PAGE 26

Illust. No.	Part No.	Page No.	Ref. No.	Illust. No.	Part No.	Page No.	Ref. No.
1	WE.479	24	18	22	E.2256	29	18
2	WE.203E	24	17	23	E.2254	29	16
3	E.656	19	37	24	GS.87	29	17
4	E.3048	19	41	25	E.2302	29	4
5	GE.29	24	9	26	E.1558	29	6
6	*E.1563	19	13	27	E.1486A	29	5
	*E.1969	19	25	28	47502A	29	13
	*E.1908	19	31	29	E.1992	29	12
7	E.2921	24	33	30	E.2741	29	14
	E.2921T	24	34	31	K.164	29	15
8	E.1511	24	35	32	E.1463	29	8
9	E.2490A	24	36	33	E.1492	29	7
10	E.2922	24	37	34	E.400	29	10
11	E.2260	25	39	35	E.1471	29	9
12	E.1516	25	38	36	E.398	29	3
13	E.1479	25	37	37	E.1472	29	1
14	E.1591	25	33	38	111700	108	22
15	E.2877	25	32	39	E.2451	108	21
16	E.2883	25	34	40	E.1521	31	7
17	E.2296	25	35	41	E.2826	30	35
18	E.489	25	36	42	E.1681	31	6
19	E.2914	24	28	43	E.2912	31	8
20	E.2918	24	22	44	E.396	31	9
	E.2918T	24	24	45	E.509	31	10
21	E.2915	24	25	46	E.1580	29	2

6T MODEL

Illust. No.	Part No.	Page No.	Ref. No.	Illust. No.	Part No.	Page No.	Ref. No.
1	WE.479	24	18	23	E.2254	29	16
2	WE.203E	24	17	24	GS.87	29	17
3	E.2897	24	1	25	E.2302	29	4
4	E.3049	24	5	26	E.1558	29	6
5	E.2898	24	13	27	E.1486A	29	5
6	*E.2891	19	17	28	47502A	29	13
7	E.2921	24	33	29	E.1992	29	12
8	E.1511	24	35	32	E.1463	29	8
9	E.2490A	24	66	33	E.1492	29	7
10	E.2922	24	37	34	E.400	29	10
11	E.2260	25	39	35	E.1471	29	9
12	E.1516	25	38	36	E.398	29	3
13	E.1479	25	37	37	E.1472	29	1
14	E.1591	25	33	38	111700	108	22
15	E.2877	25	32	39	E.2451	108	21
16	E.2883	25	34	40	E.1521	31	7
17	E.2296	25	35	41	†E.2826	30	37
18	E.489	25	36	42	E.1681	31	6
19	E.2901	24	29	43	E.2912	31	8
20	E.2908	24	23	44	E.396	31	9
21	E.2902	24	26	45	E.509	31	10
22	E.2256	29	18	46	E.1580	29	2

†*See pages 30-31 for suffix letter giving sprocket size.* **See page 12 for Piston Assemblies.*

REF No.	PART No.	DESCRIPTION	5T	6T	TR5	T100
		STUDS AND BOLTS FOR CRANKCASE HALVES				
1	E1555	Bolt, crankcase top rear	1	1	1	1
2	S25-3	Washer, crankcase top rear bolt	1	1	1	1
3	T456	Stud, crankcase bottom front	1	1	1	1
4	S1-51	Nut, ,, ,, ,, stud	2	2	2	2
5	S25-3	Washer, crankcase bottom front stud ...	2	2	2	2
6	E1647	Screw, crankcase inside boss	2	2	2	2
		FOR ENGINE PLATE STUDS SEE PAGE 50				
		OIL PUMP				
7	E3072	Pump assembly, oil	1	1	1	1
8	GS35	Body, oil pump	1	1	1	1
9	GS153	Plunger, oil pump feed	1	1	1	1
10	E1476	,, ,, ,, scavenge	1	1	1	1
11	E495	Block, ,, ,, slider	1	1	1	1
12	S70-7	Ball, ,, ,, valve	2	2	2	2
13	E403	Spring, ,, ,, ,, ...	2	2	2	2
14	E2360	Plug, ,, ,, ,, ...	2	2	2	2
15	E1537	Washer, oil pump joint	1	1	1	1
		RELEASE VALVE				
16	E2795	Valve, release and oil indicator	1	1	1	1
17	E2794	Body, ,, valve	1	1	1	1
18	GS251	Piston, ,, ,, ...	1	1	1	1
19	E2790	Cap, ,, ,, ...	1	1	1	1
20	E1670	Washer, ,, ,, body	1	1	1	1
21	GS254	,, ,, ,, cap	1	1	1	1
22	E2788	Spring, ,, ,, main	1	1	1	1
23	E2791	Shaft, indicator button	1	1	1	1
24	E2793	Tube, ,, rubber	1	1	1	1
25	E2789	Spring, ,, auxiliary	1	1	1	1
26	E2792	Nut, ,, shaft	1	1	1	1
		TIMING COVER				
27	E2218/5T	Cover, timing gear	1	—	—	—
28	E2218/6T	,, ,, ,, ...	—	1	—	—
29	E2218/TR5	,, ,, ,, ...	—	—	1	—
30	E2218/T100	,, ,, ,, ...	—	—	—	1
31	E1595	Patent plate	1	—	—	—
32	E2909	,, ,, ...	—	1	—	—
33	E2876	,, ,, ...	—	—	1	—
34	E1678	,, ,, ...	—	—	—	1
35	D208-5	Rivet, patent plate	3	3	3	3
36	E378	Bush, timing gear cover	1	1	1	1
37	E2615	Plug, ,, ,, ,, ...	1	1	1	1
38	E1335	Washer, timing gear cover	1	1	1	1
40	E427	Screw ,, ,, ,, medium	7	7	7	7
41	E1049	,, ,, ,, ,, long	3	3	3	3

ALWAYS QUOTE PART NUMBERS

REF. No.	PART No.	DESCRIPTION	5T	6T	TR5	T100
		TIMING GEARS AND CAMSHAFTS				
1	E1472	Pinion, timing	1	1	1	1
2	E1580	Key, ,, pinion	1	1	1	1
3	E398	Nut, ,, ,, ...	1	1	1	1
4	E2302	Camshaft, inlet and exhaust	2	2	2	2
5	E1486A	Wheel, ,, ,, ,, camshaft ...	2	2	2	2
6	E1558	Key, camshaft wheel	2	2	2	2
7	E1492	Nut, ,, ,, exhaust	1	1	1	1
8	E1463	,, ,, ,, inlet (pump drive) ...	1	1	1	1
9	E1471	Wheel, intermediate gear	1	1	1	1
10	E400	Bush, ,, ,, wheel	1	1	1	1
11	E375	Spindle, ,, ,, ,, ...	1	1	1	1
12	E1992	Gear, magneto c/w auto advance (B.T.H.) ...	1	1	—	—
13	47502A	Gear, magneto c/w auto advance (Lucas) ...	1	1	—	—
14	E2741	,, ,, (fixed)	—	—	1	1
15	K164	Nut, ,, gear ⅜″ std.	—	—	1	1
		Washer, ,, ,, ,, ,, ...	—	—	1	1
		CRANKCASE BREATHER				
16	E2254	Valve, crankcase rotary	1	1	1	1
17	GS87	Disc, ,, ,, valve	1	1	1	1
18	E2256	Spring, ,, ,, ,, ...	1	1	1	1
19	E2724	Pipe, ,, breather	1	1	1	1
20	E3078	Extension, crankcase breather pipe (rubber)	1	1	1	1
		TAPPETS AND TAPPET BLOCKS				
21	E3059	Tappet	4	4	4	4
22	E1477	Block, tappet guide	2	2	—	—
23	E2803	,, ,, ,, ...	—	—	2	—
24	*GS36	,, ,, ,, ...	—	—	—	2
25	H200	Screw, ,, ,, block lock	2	2	2	2
26	E2312	Washer, tappet guide block lock	2	2	2	2
		PUSH RODS				
27	E1693	Rod, push	4	4	—	—
28	E2620	,, ,, ...	—	—	4	4
		PUSH ROD COVER TUBE				
29	E1505	Tube, push rod cover	2	2	—	2
30	E2804	,, ,, ,, ,, ...	—	—	2	—
31	E2425	Washer, push rod cover lower seal	—	—	2	—
32	E1496	,, ,, ,, ,, ,, ,, ...	2	2	—	2
33	E1497	,, ,, ,, ,, upper ,, ...	2	2	2	2

* Tappet Blocks +.005 inch oversize available

ALL GOODS MUST BE SENT TO THE WORKS CARRIAGE PAID

REF. No.	PART No.	DESCRIPTION	5T	6T	TR5	T100
		OVERHEAD ROCKER GEAR				
1	E1461T	Box, inlet rocker	1	1	1	1
2	E1462T	Box, exhaust rocker	1	1	1	1
3	E1650	Gasket, rocker box joint	4	4	4	4
4	E1540	Stud, ,, ,, (to cylinder head) ...	4	4	—	—
5	E2980	,, ,, ,, ,, ,, ,, ...	—	—	4	4
6	F879	Nut, ,, ,, ,, ,, ,, ...	4	4	4	4
7	S25-43	Washer, rocker box nut	—	—	4	4
8	E1564	Cap, ,, ,, inspection	4	4	4	4
9	E1577	Washer, ,, ,, ,, cap	4	4	4	4
10	E1545	Bolt, rocker box to cylinder head	4	4	—	—
11	E2982	,, ,, ,, ,, ,, ,, ...	—	—	4	4
12	S25-13	Washer, rocker box to cylinder head ...	4	4	4	4
13	E1457	Rocker, valve R.H.	2	2	2	2
14	E1458	,, ,, L.H.	2	2	2	2
15	E1483	Ball pin, valve rocker	4	4	4	4
16	E1513	Adjusting pin, valve rocker	4	4	4	4
17	E470	Locknut, adjusting pin	4	4	4	4
18	E1330	Washer, valve rocker thrust $\frac{3}{8}''$	2	2	2	2
19	E1575	,, ,, ,, ,, $\frac{1}{2}''$	6	6	6	6
20	E1574	,, ,, ,, spring	4	4	4	4
21	E1512	Spindle, valve rocker	2	2	2	2
22	E1435	Nut, ,, ,, spindle (dome) ...	2	2	2	2
23	E1335	Washer, ,, ,, spindle (copper) ...	4	4	4	4
		ROCKER OIL FEED AND DRAIN PIPES				
24	E3082	Pipe, rocker oil feed	1	1	1	1
25	E1947	Connection, feed pipe (rubber)	1	1	1	1
26	XA69	Clip, pipe securing	5	5	5	5
27	GS272	Pipe, rocker oil drain inlet	1	1	1	1
28	GS273	,, ,, ,, ,, exhaust	1	1	1	1
29	E1601	Adaptor, drain pipe to cylinder head	4	4	—	—
30	E2767	,, ,, ,, ,, ,, ,, ...	—	—	4	4
31	E1335	Washer, ,, ,, ,, ,, ,, ...	8	8	8	8
32	E984	Adaptor ,, ,, ,, cover tube	2	2	2	2
33	F1880	Washer, ,, ,, ,, ,, ,, ...	4	4	4	4
		ENGINE SPROCKET AND SHOCK ABSORBER				
34	E2826F	Sprocket, engine 19T sidecar	1	—	—	1
35	E2826C	,, ,, 22T solo	1	—	—	1
36	E2826D	,, ,, 21T sidecar	—	1	—	—
37	E2826A	,, ,, 24T solo	—	1	—	—
38	E2826D	,, ,, 21T solo	—	—	1	—

ALWAYS QUOTE ENGINE NUMBER AND PREFIX

REF. No.	PART No.	DESCRIPTION	5T	6T	TR5	T100
1	E2826H	Sprocket, engine 17T	As required			
2	E2826G	,, ,, 18T				
3	E2826E	,, ,, 20T				
4	E2826B	,, ,, 23T				
5	E2826	,, ,, 25T				
6	E1681	Slider, shock absorber	1	1	1	1
7	E1521	Sleeve, ,, ,, ...	1	1	1	1
8	E2912	Spring, ...	1	1	1	1
9	E396	Collar, ,, ,, spring	1	1	1	1
10	E509	Nut, shock absorber sleeve	1	1	1	1

EXHAUST SYSTEM GROUP

EXHAUST PIPES

11	E1520	Pipe, exhaust L/H	1	1	—	—
12	E3014	,, ,, ,, ...	—	—	1	—
13	E2985	,, ,, ,, ...	—	—	—	1
14	E1519	,, ,, R/H	1	1	—	—
15	E3015	,, ,, ,, ...	—	—	1	—
16	E2987	,, ,, ,, ...	—	—	—	1
17	E1269	Clip, exhaust to cylinder head	2	2	—	2
18	E2857	,, ,, ,, extension pipe	—	—	1	—
19	E409	Bolt, exhaust clip	2	2	—	2
20	E410A	Washer, exhaust clip bolt	2	2	—	2
21	TE164E	Bolt, ,, ,, ...	—	—	1	—
22	TE164C	Nut, ,, ,, bolt (D shape)	—	—	1	—
23	TE164D	Washer, ,, ,, ,, ,, ...	—	—	1	—
24	E2989	Bracket, exhaust pipe to engine plate (L.H.)	—	—	—	1
25	E2990	,, ,, ,, ,, ,, ,, (R.H.)	—	—	—	1
26	DS57	Bolt, ,, ,, ,, bracket	—	—	—	2
27	S26-2	Washer, ,, ,, ,, ,, bolt ...	—	—	—	2
28	F879	Nut, ,, ,, ,, ,, ,, ...	—	—	—	2

SILENCER

29	E1568	Silencer, L/H	1	1	—	1
30	E1567	,, R/H	1	1	—	1
31	E2827	,, ...	—	—	1	—
32	E688	Bolt, silencer hanger	2	2	—	2
33	F929	Bolt, silencer hanger	—	—	1	—
34	T224	Nut, ,, ,, bolt	2	2	—	2
35	F1335	Washer, silencer hanger bolt L/H	—	—	—	—
36	E2271	Clip, silencer to exhaust pipe	—	—	—	—
37	TE246	,, ,, ,, ,, ,, ...	2	2	—	2
38	E2857	,, ,, ,, ,, ,, ...	—	—	1	—
39	TE164E	Bolt, ,, ,, ,, ,, clip	2	2	1	2
40	TE164C	Nut, ,, ,, ,, ,, ,, ...	2	2	1	2
41	TE164D	Washer, silencer to exhaust pipe clip ...	2	2	1	2

ALWAYS PRINT YOUR ORDER

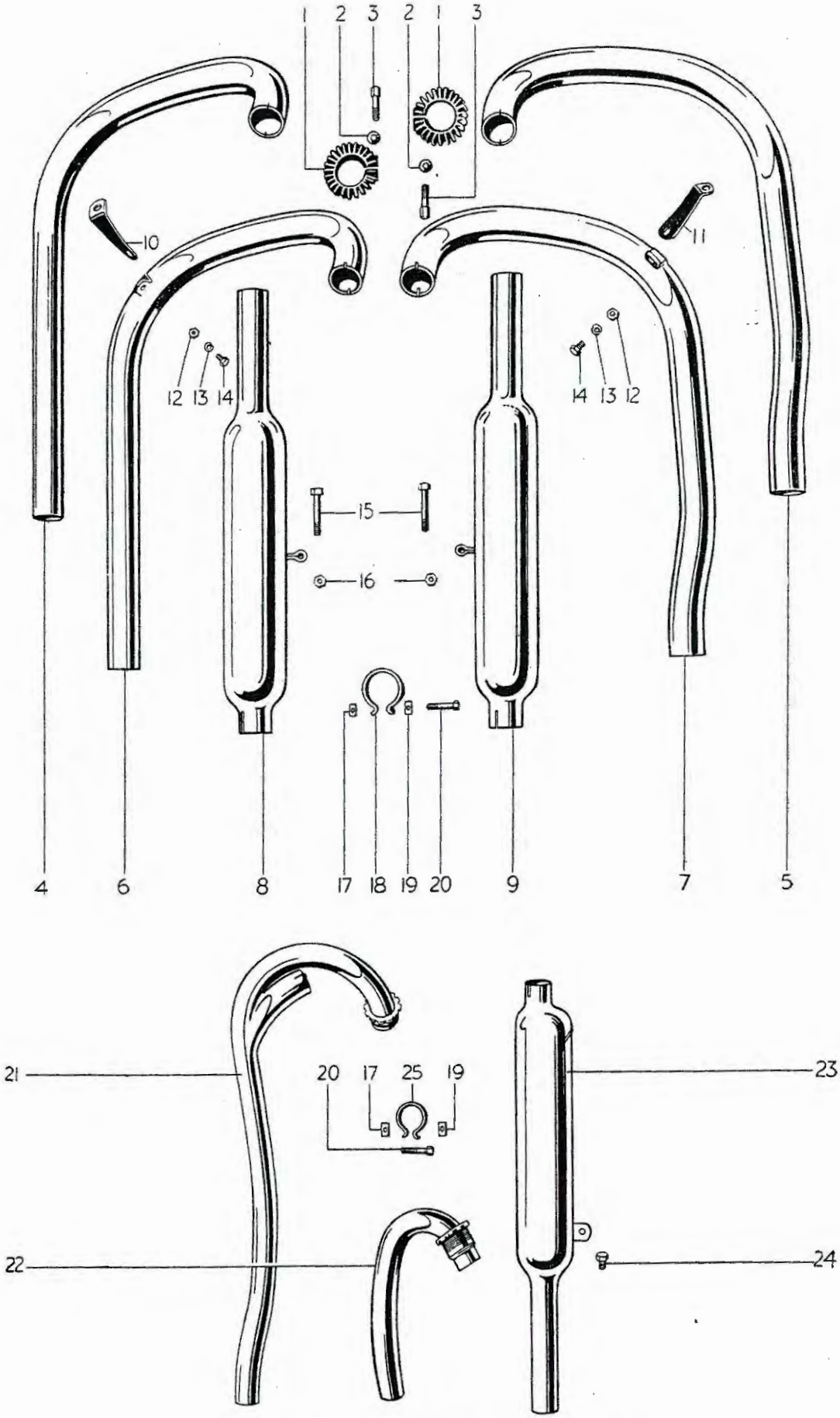

EXHAUST PIPES AND SILENCERS

GASKET SET GROUP

REF. No.	PART No.	DESCRIPTION	5T	6T	TR5	T100
		GASKET SET GROUP				
1	GS5T/51	Gasket set	1	—	—	—
2	GS6T/52	,, ,, ...	—	1	—	—
3	GSTR5/51	,, ,, ...	—	—	1	—
4	GST100/51	,, ,, ...	—	—	—	1

EXHAUST SYSTEM

INDEX TO ILLUSTRATION ON PAGE 32

Illust. No.	Part No.	Page No.	Ref. No.	Illust. No.	Part No.	Page No.	Ref. No.
1	E.1269	31	17	14	DS.57	31	26
2	E.410A	31	20	15	E.688	31	32
3	E.409	31	19	16	T.224	31	34
4	E.1519	31	14	17	TE.164C	31	40
5	E.1520	31	11	18	TE.246	31	37
6	E.2987	31	16	19	TE.164D	31	41
7	E.2985	31	13	20	TE.164E	31	39
8	E.1567	31	30	21	E.2985	31	13
9	E.1568	31	29	22	E.2987	31	16
10	E.2990	31	23	23	E.2827	31	31
11	E.2989	31	24	24	F.929	31	33
12	F.879	31	28	25	E.2857	31	38
13	S.26-2	31	27				

FOR IDENTIFICATION OF PARTS SEE PAGE 6

GEARBOX GROUP

REF. No.	PART No.	DESCRIPTION	5T	6T	TR5	T100
1	T908	Gearbox complete less clutch—standard ratio	1	1	—	1
2	T954	,, ,, ,, ,, —close ratio ...	1	1	—	1
3	T967	,, ,, ,, ,, —wide ratio ...	1	1	—	1
4	T980	,, ,, ,, ,, —wide ratio ...	—	—	1	—
		GEARBOX CASING				
5	T909	Casing, with bushes, gearbox	1	1	1	1
6	T989	Dowel, casing to inner cover	2	2	2	2
7	E698	Stud, casing to outer cover	2	2	2	2
8	S1-51	Nut, casing stud	2	2	2	2
9	S25-3	Washer, casing stud	2	2	2	2
10	T935	Cover with bushes, gearbox outer	1	1	1	1
11	T452	Screw, outer cover to casing (long)	1	1	1	1
12	E573	,, ,, ,, ,, ,, ...	1	1	1	1
13	E427	,, ,, ,, ,, inner cover	2	2	2	2
14	E1049	,, ,, ,, ,, ,, ,, (long) ...	1	1	1	1
15	T931	Cover with bushes, gearbox inner	1	1	1	1
16	T323A	Stud, inner cover to outer cover	1	1	1	1
17	S1-51	Nut, inner cover to outer cover stud ...	1	1	1	1
18	S25-3	Washer, inner cover to outer cover stud ...	1	1	1	1
19	E329	Screw, inner cover to outer cover (long) ...	1	1	1	1
20	E427	Screw, inner cover to outer cover	3	3	3	3
21	T45	Stop, kickstarter quadrant	1	1	1	1
22	T912	Peg, layshaft bush inner cover	1	1	1	1
23	E1564	Cap, gearbox oil filler	1	1	1	1
24	E1S77	Washer, gear box oil filler joint	1	1	1	1
25	S46-15	Plug, gearbox drain and cover level	2	2	2	2
26	PT104B	Washer, ,, ,, ,, ,, ,, ...	2	2	2	2
		GEARBOX FITTINGS				
27	T717	Plate, gearbox mounting clamp	2	2	2	2
28	T4S6	Stud, ,, clamp tie	2	2	2	2
29	S1-51	Nut, ,, ,, ,, stud	3	3	3	3
30	T461	Nut, ,, ,, ,, ,, ...	1	1	1	1
31	S26-3	Washer, ,, ,,, ,, ,, ...	2	2	2	2
32	F1681	Bolt, ,, ,, pin	1	1	1	1
33	S4-13	Nut, ,, ,, ,, bolt	1	1	1	1
34	S25-8	Washer, ,, ,, ,, ,, ...	1	1	1	1

ALWAYS QUOTE ENGINE NUMBER AND PREFIX

REF. No.	PART No.	DESCRIPTION	5T	6T	TR5	T100
1	F2391	Bolt, gearbox pivot	—	—	—	—
2	T430	,, ,, ,, ...	1	1	1	1
3	F3108	,, ,, ,, ...	—	—	1	—
5	PO172A	Nut, ,, ,, bolt	—	—	1	—
6	S26-1	Washer, ,, ,, bolt	1	1	1	1
7	T27S	Adjuster assembly, primary chain	1	1	1	1

SHAFTS AND GEARS

8	T914	Mainshaft and low gear (16T)	1	1	1	1
9	PT108B	Bush, mainshaft for clutch rod	1	1	1	1
10	S66-1	Woodruff key No.6	1	1	1	1
11	T421	Nut, clutch to mainshaft	1	1	1	1
12	T420	Washer, clutch to mainshaft plain	1	1	1	1
13	T524	,, ,, ,, ,, lock	1	1	1	1
14	T918	Gear, mainshaft high (26T)	1	1	—	1
15	T969	,, ,, ,, (28T)	—	—	1	—
16	T920	Bush, ,, ,, gear	1	1	1	1
17	T917	Gear, mainshaft 3rd (24T)	1	1	1	1
18	T916	,, ,, 2nd (20T)	1	1	—	1
19	T968	,, ,, 2nd (19T)	—	—	1	—
20	T921	Layshaft c/w high gear (20T) and speed gear	1	1	—	1
21	T971	,, ,, ,, ,, (18T) ,, ,, ,,	—	—	1	—
22	T930	Gear, layshaft 3rd (22T)	1	1	1	1
23	T929	,, ,, 2nd (26T)	1	1	—	1
24	T974	,, ,, 2nd (27T)	—	—	1	—
25	T926	Gear, layshaft low (30T)	1	1	1	1
26	T928	Bush, ,, ,, gear	1	1	1	1

For speedometer drive gears see page 86

GEARBOX SHELL BEARINGS

27	T448	Bearing, high gear	1	1	1	1
28	T946	oil seal, ,, ,, bearing	1	1	1	1
29	E489	Circlip, ,, ,, ,, retaining	1	1	1	1
30	S35-7	Bearing, mainshaft ,, ...	1	1	1	1
31	T280	Circlip, ,, ,, ...	1	1	1	1
32	T911	Bush, layshaft casing and inner cover ...	2	2	2	2
33	T912	Peg, layshaft bush	2	2	2	2
34	T981	Disc, layshaft bush	1	1	1	1
35	T341	Bush, gear selector camplate	1	1	1	1
36	T412	Bush, footchange spindle inner	1	1	1	1
37	T57	Bush, ,, ,, outer	1	1	1	1
38	T23	Bush, kickstarter outer	1	1	1	1
39	T933	Bush, speedo gear inner cover	1	1	1	1
40	T948	Washer, speedo gear inner cover sealing ...	1	1	1	1

WHEN IN DOUBT SEND SAMPLES

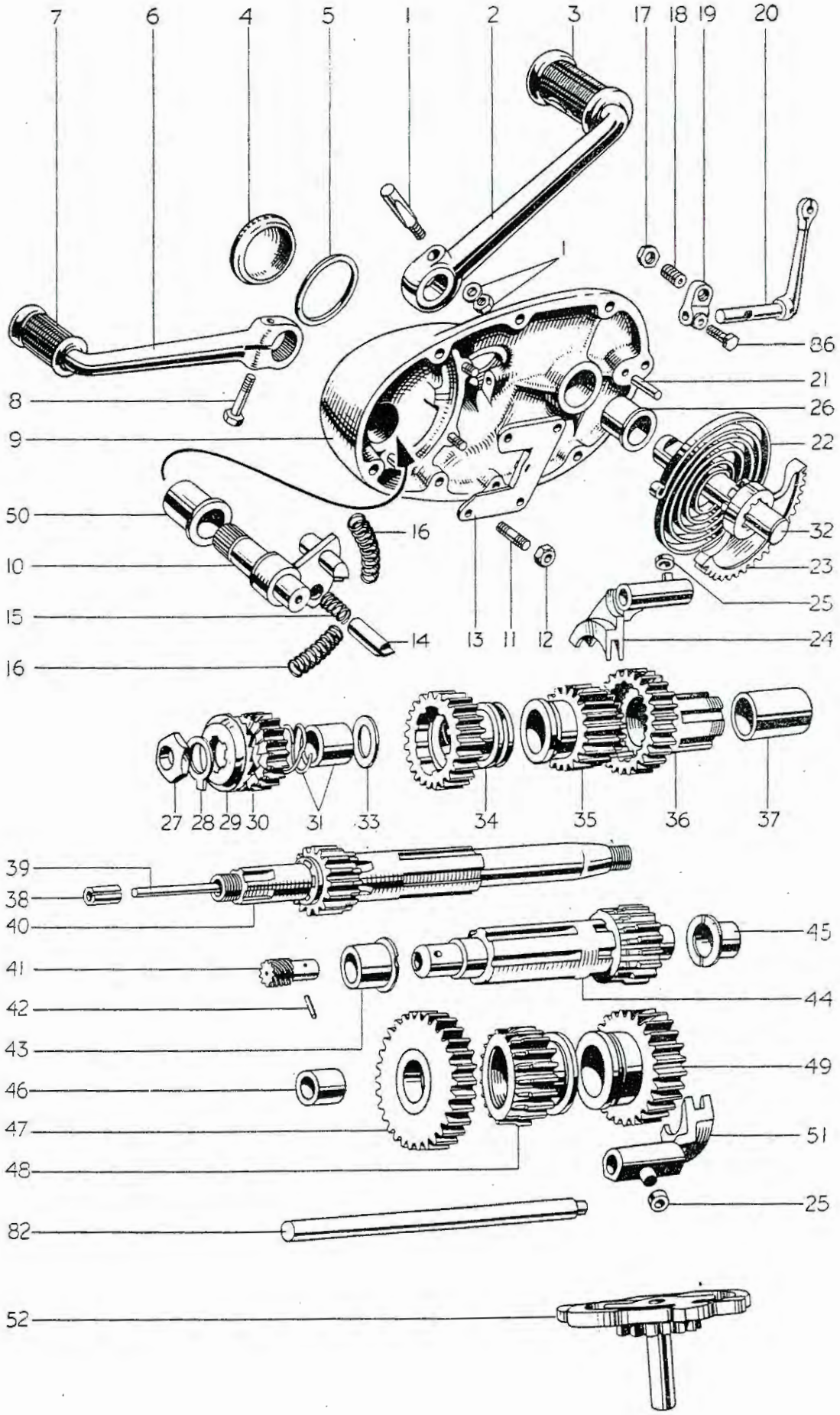

TRIUMPH FOUR SPEED GEARBOX

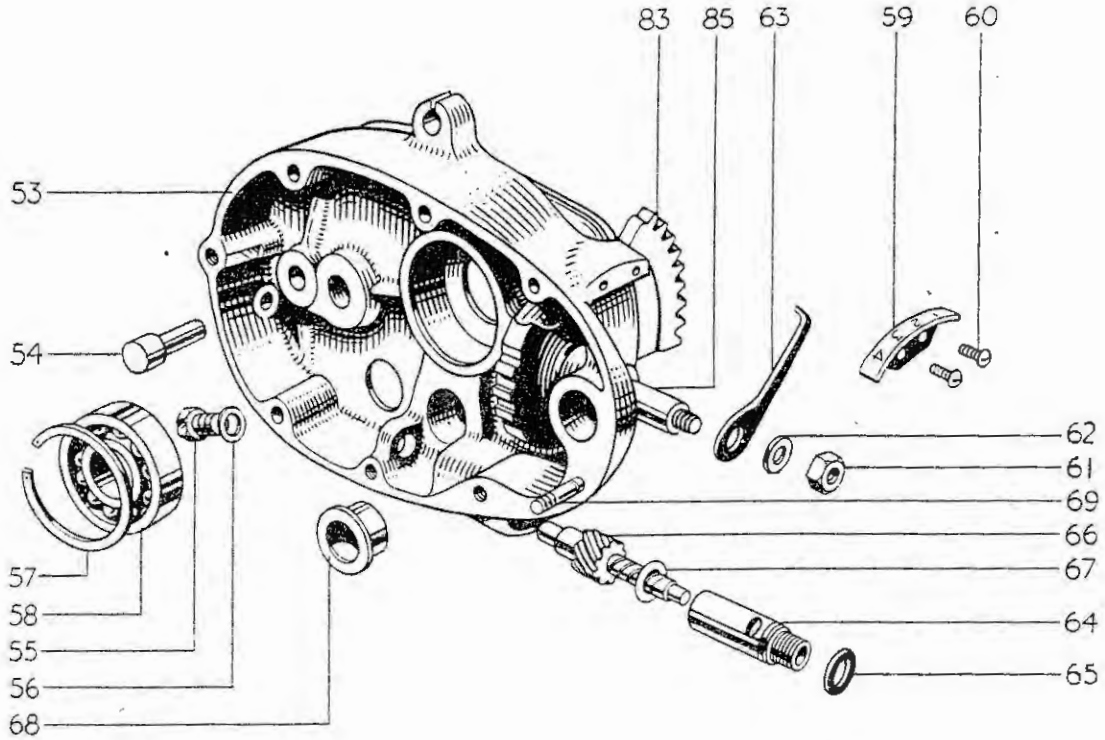

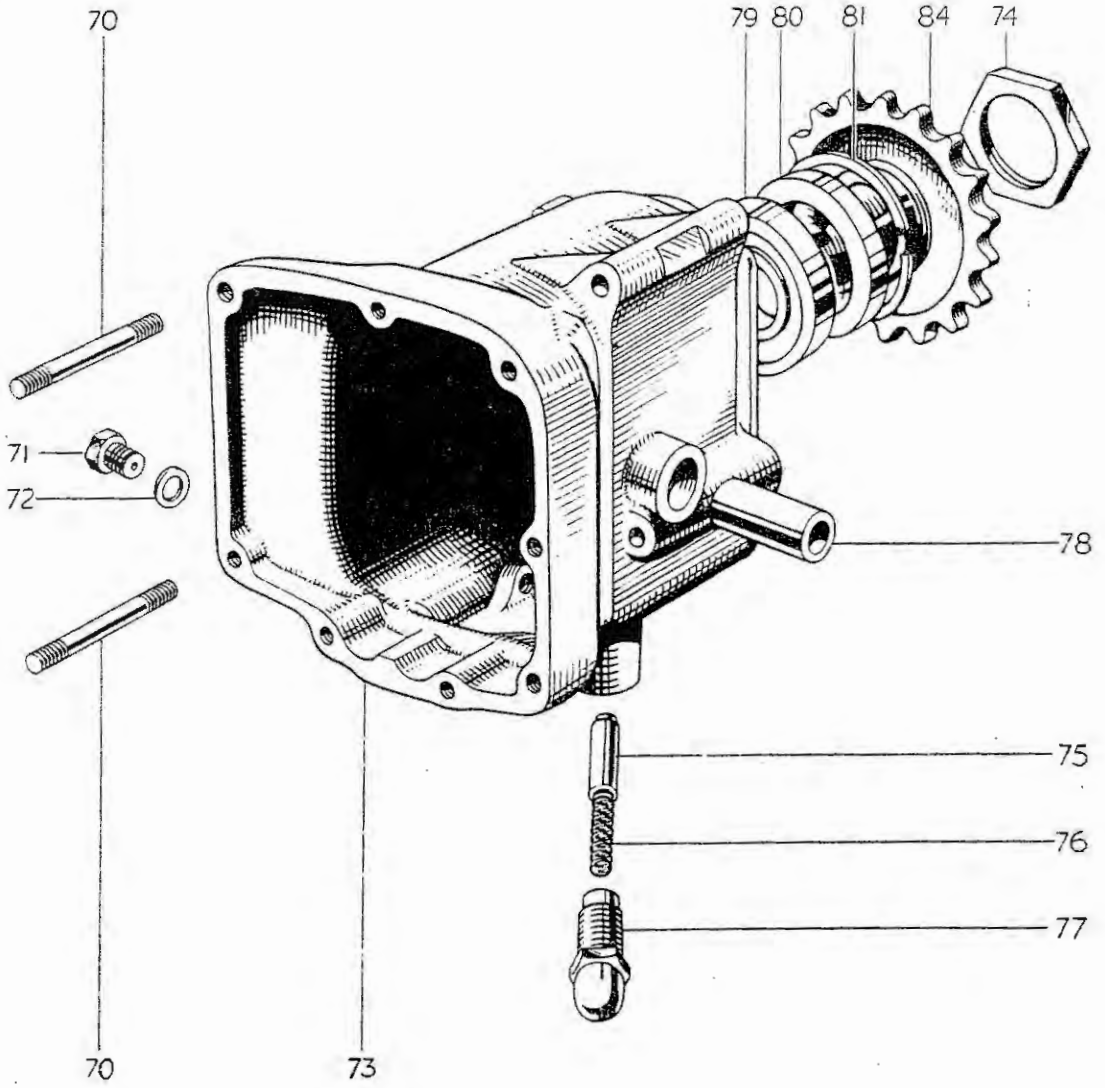

TRIUMPH FOUR SPEED GEARBOX

REF. No.	PART No.	DESCRIPTION	5T	6T	TR5	T100
		GEAR CONTROL (SELECTOR MECHANISM)				
1	T397	Quadrant, gear operating	1	1	1	1
2	T399	Spindle, ,, ,, quadrant	1	1	1	1
		Split pin $1\frac{1}{2}'' \times \frac{5}{64}''$ dia.	1	1	1	1
3	T500	Camplate, gear control	1	1	1	1
4	NT261	Roller, ,, ,, camplate	2	2	2	2
5	T501	Plunger, ,, ,, ,, ...	1	1	1	1
6	T372	Bush, gear control camplate plunger	1	1	1	1
7	T373	Spring, gear control camplate plunger ...	1	1	1	1
8	T260B	Fork, gear selector mainshaft	1	1	1	1
9	T913	,, ,, ,, layshaft	1	1	1	1
10	T291	Rod, ,, ,, fork	1	1	1	1
		GEAR CONTROL (ENCLOSED FOOTCHANGE)				
11	T407	Plate, footchange guide	1	1	1	1
12	T454	Stud, ,, ,, plate	4	4	4	4
13	F879	Nut, ,, ,, ,, stud	4	4	4	4
14	E2312	Washer, ,, ,, ,, ,, ...	4	4	4	4
15	T408/9	Plunger assembly, gear quadrant	1	1	1	1
16	T406	Plunger, gear quadrant	2	2	2	2
17	T405	Spring, ,, ,, plunger	2	2	2	2
18	T398	Pedal, footchange	1	1	1	1
19	W932	Set screw, footchange pedal	1	1	1	1
20	T449	Rubber, ,, ,, ...	1	1	1	1
21	T404	Spring, ,, ,, return	2	2	2	2
22	T395	Finger, gear indicator	1	1	1	1
23	T224	Nut, ,, ,, ...	1	1	1	1
24	S25-3	Washer, ,, ,, ...	1	1	1	1
25	T396	Quadrant, gear indicator	1	1	1	1
26	D208-17	Pin, quadrant fixing	2	2	2	2
		KICKSTARTER				
27	T451	Crank, kickstarter	1	1	1	1
28	T29/30	,, ,, folding	—	—	1	—
29	T29	Lever, ,, ,, ...	—	—	1	—
30	T30	Pedal, ,, ,, ...	—	—	1	—
31	T111	Nut, lever to pedal	—	—	1	—
32	T112	Washer, lever to pedal	—	—	1	—
33	F1814	Rubber, kickstarter crank lever	1	1	1	1
34	S52-1	Cotter pin c/w nut and washer	1	1	1	1
35	T31	Spring, k/s crank return	1	1	1	1
36	T47	Peg, k/s anchor	1	1	1	1
37	T25A	Quadrant, kickstarter	1	1	1	1

FIGURE IN MODEL COLUMN DENOTES QUANTITY PER MACHINE

GEARBOX

INDEX TO ILLUSTRATIONS ON PAGES 36 AND 37

Illust. No.	Part No.	Page No.	Ref. No.
1	S.52-1	38	34
2	T.451	38	27
3	F.1814	38	33
4	E.1564	34	23
5	E.1577	34	24
6	T.398	38	18
7	T.449	38	20
8	W.932	38	19
9	T.935	38	10
10	T.408/9	38	15
11	T.454	38	12
12	F.879	38	13
13	T.407	38	11
14	T.406	38	16
15	T.405	38	17
16	T.404	38	21
17	T.453	42	2
18	T.413	42	1
19	T.402	40	32
20	T.487	40	30
21	T.47	38	36
22	T.31	38	35
23	T.25A	38	37
24	T.260B	38	8
25	NT.261	38	4
26	T.23	35	38
27	NT.297	40	5
28	T.732	40	6
29	T.731	40	3
30	T.730	40	2
31	T.488/28	40	4
32	T.24A	40	1
33	T.505	40	7
34	T.917	35	17
35	T.916	35	18
	T.968	35	19
36	T.918	35	14
	T.969	35	15
37	T.920	35	16
38	PT.108B	35	9
39	T.455	42	3
	T.455B	42	4
40	T.914	35	8
41	T.973	86	19
	T.924	86	18
42	T.925	86	20
43	T.911	35	32
44	T.921	35	20
	T.971	35	21
45	T.911	35	32
46	T.928	35	26
47	T.926	35	25
48	T.930	35	22
49	T.929	35	23
	T.974	35	24
50	T.57	35	37
51	T.913	38	9
52	T.500	38	3
53	T.931	34	15
54	T.45	34	21
55	S.46-15	34	25
56	PT.104B	34	26
57	T.280	35	31
58	S.35-7	35	30
59	T.396	38	25
60	D.208-17	38	26
61	T.224	38	23
62	S.25-3	38	24
63	T.395	38	22
64	T.933	35	39
65	T.948	35	40
66	T.975	86	22
	T.934	86	21
67	T.825	86	23
68	T.412	35	36
69	T.323A	34	16
70	E.698	34	7
71	S.46-15	34	25
72	PT.104B	34	26
73	T.909	34	5
74	T.440	40	9
75	T.501	38	5
76	T.373	38	7
77	T.372	38	6
78	T.341	35	35
79	T.448	35	27
80	T.946	35	28
81	E.489	35	29
82	T.291	38	10
83	T.397	38	1
84	T.471A	40	8
85	T.399	38	2
86	T.401	40	33

FOR IDENTIFICATION OF PARTS SEE PAGE 6

REF. No.	PART No.	DESCRIPTION	5T	6T	TR5	T100
1	T24A	Shaft, kickstarter axle	1	1	1	1
2	T730	Pinion, ,, ...	1	1	1	1
3	T731	Ratchet, ,, ...	1	1	1	1
4	T488/28	Sleeve and spring, pinion	1	1	1	1
5	NT297	Nut, kickstarter ratchet	1	1	1	1
6	T732	Washer, ,, lock	1	1	1	1
7	T505	Washer, ,, plain	1	1	1	1
		GEARBOX SPROCKET				
8	T471A	Sprocket, gearbox	1	1	1	1
9	T440	Nut, gearbox sprocket locking	1	1	1	1
		CLUTCH				
10	T938	Clutch assembly	1	—	1	—
11	T1003	,, ,, ...	—	1	—	1
12	T940	Housing clutch sprocket	1	—	1	—
13	T985	,, ,, ,, ...	—	1	—	1
14	T417	Centre clutch	1	—	1	—
15	T872	,, ,, ...	—	1	—	1
16	T418	Hub, clutch	1	1	1	1
17	E394	Roller, clutch housing to hub	20	20	20	20
18	T414	Plate, ,, driving (corked)	4	5	4	5
19	NT288	Cork ,, insert	96	120	96	120
20	T415	Plate, ,, driven (plain)	5	6	5	6
21	T429	Spring, clutch pressure	4	—	4	—
22	T999	,, ,, ,, ...	—	4	—	4
23	T423	Pin, ,, ,, spring	4	—	4	—
24	T423A	,, ,, ,, ,, ...	—	4	—	4
25	T427	Nut, ,, ,, ,, pin	4	4	4	4
26	T425	Cup, ,, ,, ,, ...	4	—	4	—
27	T998	,, ,, ,, ,, ...	—	4	—	4
28	T986	Plate, ,, ,, c/w button	1	1	1	1
29	T422	Button, ,, ,, plate	1	1	1	1
		CLUTCH CONTROL				
30	T487	Lever, clutch operating	1	1	1	1
31	T495	Cap, ,, ,, lever rubber ...	1	1	1	1
32	T402	Arm, ,, ,, ,, ,, ...	1	1	1	1
33	T401	Peg, ,, ,, ,, ,, ...	1	1	1	1
34	E2312	Washer, clutch operating lever peg	1	1	1	1

TREASURY NOTES MUST BE REGISTERED

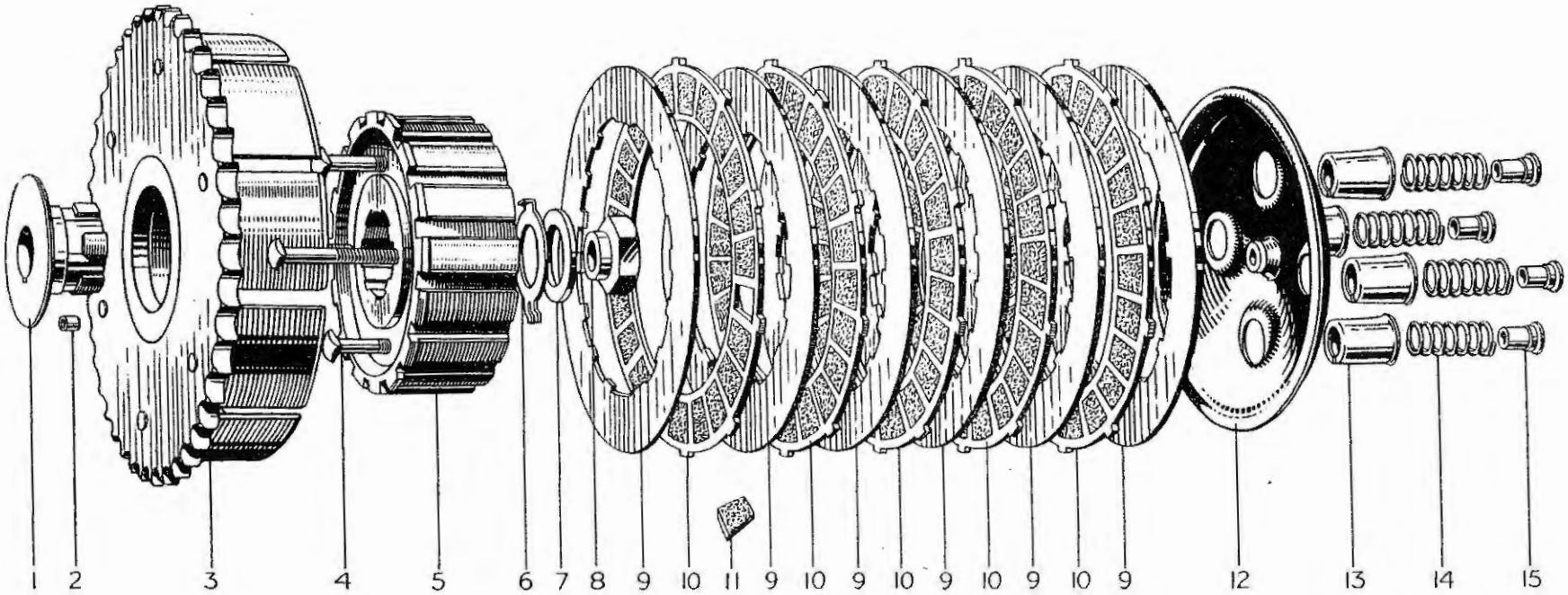

CLUTCH

INDEX

Illust. No.	Part No.	Page No.	Ref. No.	Illust. No.	Part No.	Page No.	Ref. No.
1	T.418	40	17	8	T.421	35	11
2	E.394	40	18	9	T.415	40	20
3	T.940	40	12	10	T.414	40	18
	T.985	40	13	11	NT.288	40	19
4	T.423	40	23	12	T.986	40	28
	T.423A	40	24	13	T.425	40	26
5	T.417	40	14		T.998	40	27
	T.872	40	15	14	T.429	40	21
6	T.524	35	13		T.999	40	22
7	T.420	35	12	15	T.427	40	25

REF. No.	PART No.	DESCRIPTION	5T	6T	TR5	T100
1	T413	Pin, clutch lever adjusting	1	1	1	1
2	T453	Nut, ,, ,, ,, lock	1	1	1	1
3	T455	Rod, ,, ,, ,, ...	1	—	1	—
4	T455B	Rod, ,, ,, ,, ...	—	1	—	1

WIDE RATIO GEAR GROUP

To convert from standard to wide ratio

5	T969	Gear, mainshaft high 28T	1	1	1	1
6	T968	,, ,, 2nd 19T	1	1	1	1
7	T971	Gear, layshaft high 18T c/w speedo gear ...	1	1	1	1
8	T974	,, ,, 2nd 27T	1	1	1	1

STANDARD RATIO GEAR GROUP

To convert from wide to standard ratio

9	T918	Gear, mainshaft high 26T	1	1	1	1
10	T916	,, ,, 2nd 20T	1	1	1	1
11	T921	Gear, layshaft high 20T c/w speedo gear ...	1	1	1	1
12	T929	,, ,, 2nd 26T	1	1	1	1

CLOSE RATIO GEAR GROUP

13	T99S	Mainshaft and low gear 18T	1	1	1	1
14	PT108B	Bush, mainshaft for clutch rod	1	1	1	1
15	T957	Gear ,, high 24T	1	1	1	1
16	T955	,, ,, 2nd 21T	1	1	1	1
17	T956	,, ,, 3rd 23T	1	1	1	1
18	T920	,, ,, high gear	1	1	1	1
19	T961	Gear, layshaft low 28T	1	1	1	1
20	T959	,, ,, high 22T	1	1	1	1
21	T963	,, ,, 2nd 25T	1	1	1	1
22	T964	,, ,, 3rd 23T	1	1	1	1
23	T928	Bush, ,, low gear	1	1	1	1

Gear Ratios. Suitable ratios can be selected from the three groups, which will enable the rider to operate his machine for normal road work or sporting events. To vary the ratios of any group, engine sprockets ranging from 17 to 25 teeth are available.

On page 116 there will be found an R.P.M. and Gear Ratio Chart, which will assist the rider in making his selection.

SEE PAGE 116 FOR GEAR RATIO CHART

REF. No.	PART No.	DESCRIPTION	5T	6T	TR5	T100

FRAME GROUP

FRONT PORTION

1	F3292	Frame, front portion	1	1	—	—
2	F3295	Frame, ,, ,, ...	—	—	1	—
3	E1023	Stud, seat lug to back stays	—	—	1	—
4	F1561	Stud, ,, ,, ,, ,, ,, ...	1	1	—	1
5	PO172A	Nut, ,, ,, ,, ,, ,, stud	2	2	1	2
6	F3073	Nut, ,, ,, ,, ,, ,, ,, R/H ...	—	—	1	—
7	S26-1	Washer, seat lug to back stays stud	2	2	2	2
8	F994	Stud, seat tube to back stays (bottom) ...	1	1	1	1
9	S1-30	Nut, ,, ,, ,, ,, ,, stud	2	2	2	2
10	SCZ45	Washer, seat tube to back stays stud	2	2	2	2
11	F1841	Support, petrol tank front	1	1	—	1
12	F1451	Bolt, ,, ,, ,, support	1	1	—	1
13	S1-52	Nut, ,, ,, ,, ,, ...	1	1	—	1
14	F3028	Support, ,, ,, rear	1	1	—	1
15	F2687	Bolt, ,, ,, ,, support	2	2	—	2
16	S26-3	Washer, ,, ,, ,, ,, ...	2	2	—	2
17	NW100	Lubricator, steering column	1	1	1	1

SEE FRONT FORK GROUP FOR HEAD LUG STEERING RACES PAGE 56

REAR PORTION

18	F3102	Frame, rear portion	1	1	—	—
19	F3319	Frame, ,, ,, ...	—	—	1	—
20	F3178	Frame, ,, ,, ...	—	—	—	1
21	F2908	Stud, mudguard to rear frame	1	1	—	1
22	F969	Screw, rear chain adjuster	2	2	2	—
23	F3164	Screw, ,, ,, ,, ...	—	—	—	2
24	F1008	Locknut, ,, ,, ,, screw	—	—	2	—
25	F1824	,, ,, ,, ,, ,, ...	2	2	—	2

TORQUE BRACKET GROUP

26	F1597	Stay, engine to frame clip	2	2	—	2
27	E2800	Clip, ,, steady L/H half	—	1	1	—
28	E2801	Clip, ,, ,, R/H half	—	—	1	—
29	E1598	Clip, torque stay	1	1	—	1
30	DS55	Bolt torque bracket clip	—	—	1	—
31	F1031	,, ,, stay clip	1	1	—	1
32	S1-51	Nut, ,, bracket clip bolt	—	—	1	—
33	PO172A	,, ,, stay ,, ,, ...	1	1	—	1
34	S26-3	Washer, torque bracket clip bolt	—	—	1	—
35	S25-3	,, ,, stay clip bolt	1	1	—	1
36	S1-52	Nut, torque stay to engine bolt	2	2	—	2
37	S26-1	Washer, torque stay to engine bolt	2	2	—	2

PLEASE STATE COLOUR WHEN ORDERING

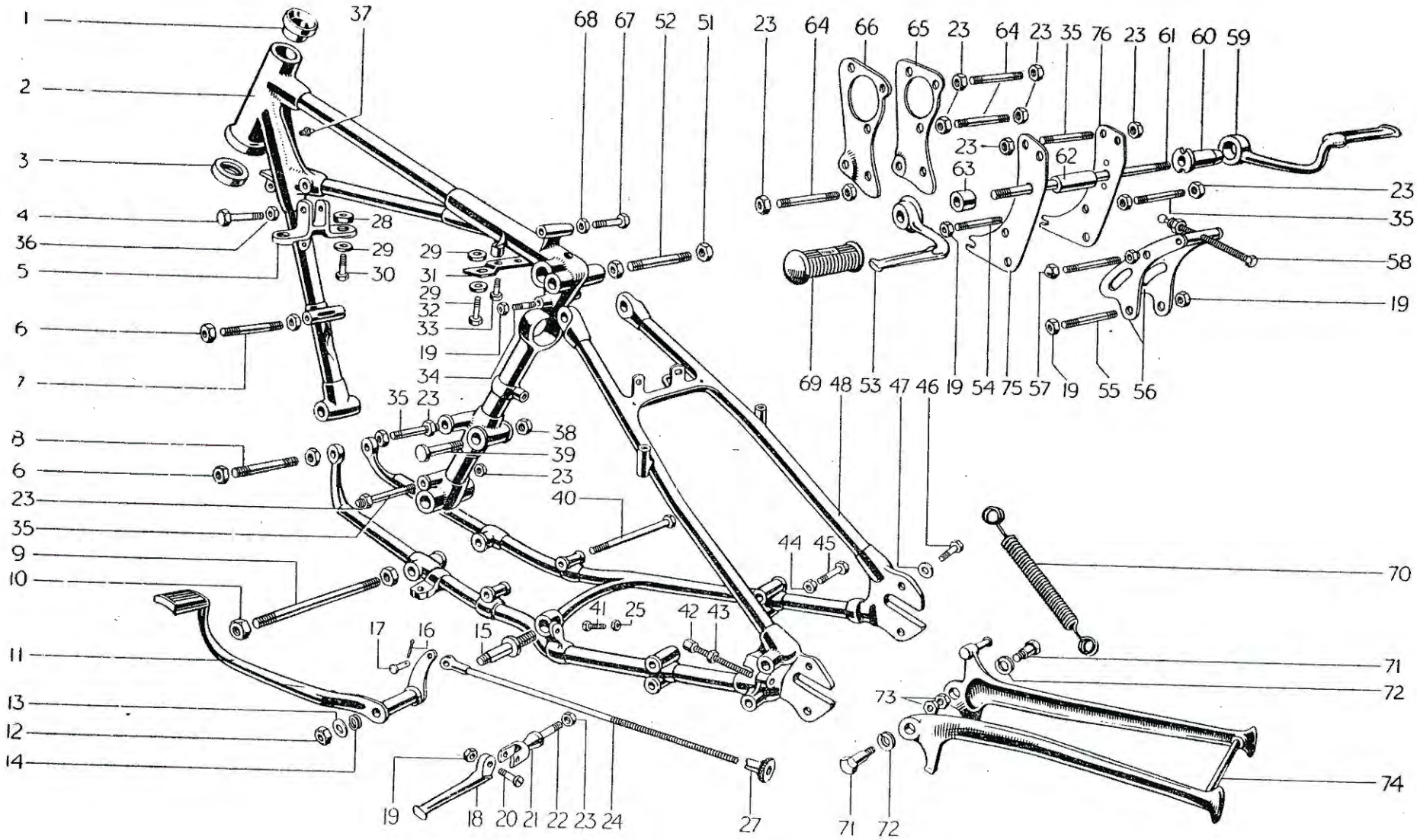

5T, 6T AND T100 FRAME AND COMPONENTS

FRAME—5T, 6T & T100 MODELS

INDEX TO ILLUSTRATION ON PAGE 44

Illust. No.	Part No.	Page No.	Ref. No.
1	H.437	56	17
2	F.3292	43	1
3	H.111	66	18
4	F.1451	43	12
5	F.1841	43	11
6	DS.47	50	20
7	F.2414	50	15
8	F.1680	50	19
9	F.994	43	8
10	S.1-30	43	9
11	F.3313	79	6
12	S.1-52	79	13
13	S.25-2	79	14
14	S.26-16	79	15
15	F.867	79	10
16	$\frac{1}{16}$" Split pin		
17	WF.32	79	20
18	F.1694	80	2
19	S.1-51	80	5
20	F.2271	80	4
21	F.2268	80	7
22	F.1696	80	8
23	PO.172A	80	9
24	F.1015A	79	17
	F.1015B	79	19
	F.1015C	79	18
25	F.879	79	9
27	NS.372	79	22
28	F.1813	71	15
29	F.967	71	14
30	F.1808	71	8
31	F.3028	43	14
32	F.966	71	9
33	F.2687	43	15
34	F.1682	50	37
35	F.839	50	18
36	S.1-52	43	13
37	NW.100	43	17
38	S.4-13	34	33
39	F.1681	34	32
40	T.430	35	2
41	F.1149	79	8
42	F.969	43	22
	F.3164	43	23
43	F.1008	43	24
	F.1824	43	25
44	T.224	31	34
45	E.688	31	32
46	E.579	66	42
47	S.26-2	66	44
48	F.3102	43	18
	F.3178	43	20
51	PO.172A	43	5
52	F.1561	43	4
53	F.987	79	25
54	F.839	50	18
55	T.456	34	28
56	T.717	34	27
57	T.461	34	30
58	T.275	35	7
59	F.1731	79	24
60	F.1736	79	29
61	F.991	79	30
62	F.862	79	33
63	T.87	79	34
64	F.1711	50	16
65	E.2223	50	7
66	E.2222	50	6
67/8	NA.64J	80	21
69	NF.704	79	27
70	F.975A	57	2
71	F.977	57	3
72	F.976	57	5
73	W.630	57	4
74	F.1834	57	1
75	F.1811	50	9
76	F.1811A	50	11

FOR IDENTIFICATION OF PARTS SEE PAGE 6

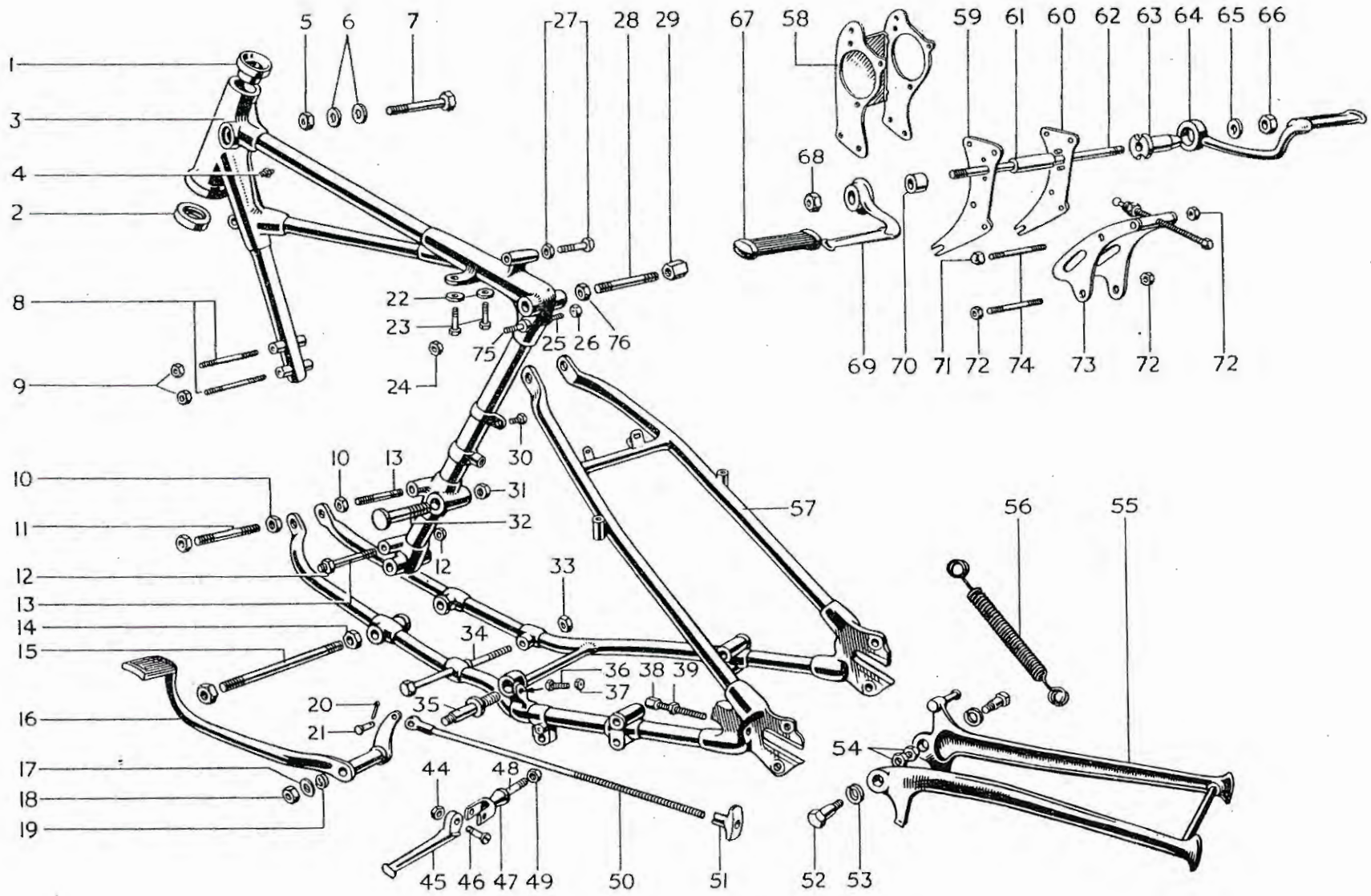

TR5—FRAME AND COMPONENTS

FRAME TR5

INDEX TO ILLUSTRATION ON PAGE 46

Illust. No.	Part No.	Page No.	Ref. No.	Illust. No.	Part No.	Page No.	Ref. No.
1	H.437	56	17	38	F.969	43	22
2	H.111	56	18	39	F.1008	43	24
3	F.3295	43	2	44	S.1-51	80	5
4	NW.100	43	17	45	F.1694	80	2
5	S.1-51	71	11	46	F.2271	80	4
6	S.25-3	71	12a	47	F.2268	80	7
7	F.3007	71	10	48	F.1696	80	8
8	F.1711	50	16	49	PO.172A	80	9
9	PO.172A	50	21	50	F.1015	75	16
10	PO.172A	50	21		F.1015C	75	18
11	F.839	50	18	51	F.2896	75	23
12	S.1-51	50	23	52	F.977	57	3
13	E.522	50	17	53	F.976	57	5
14	S.1-30	43	9	54	W.630	57	4
15	F.994	43	8	55	F.1834	57	1
16	F.3313	79	6	56	F.975A	57	2
17	S.25-2	79	14	57	F.3319	43	19
18	S.1-52	79	13	58	F.2979	50	8
19	S.26-16	79	15	59	F.2884	50	10
20	$\frac{1}{16}'' \times \frac{1}{2}''$ Split Pin			60	F.2885A	50	12
21	WF.32	79	20	61	F.862	75	33
22	F.967	71	14	62	F.991	75	30
23	F.966	71	9	63	F.1736	75	29
24	S.1-51	50	38	64	F.1731	75	24
25	F.1682	71	37	65	S.25-8	75	32
26	S.1-51	71	38	66	DS.48	75	31
27	NA.64J	80	21	67	F.1695	75	28
28	E.1023	43	3	68	DS.48	75	31
29	F.3073	43	6	69	F.987	75	25
30	F.2398	71	32	70	T.87	75	34
31	S.4-13	34	33	71	T.461	34	30
32	F.1681	34	32	72	S.1-51	34	29
33	PO.172A	35	5	73	T.717	34	27
34	F.3108	35	3	74	T.456	34	28
35	F.867	75	10	75	F.1682	50	37
36	F.1149	75	8	76	PO.172A	43	5
37	F.879	75	9				

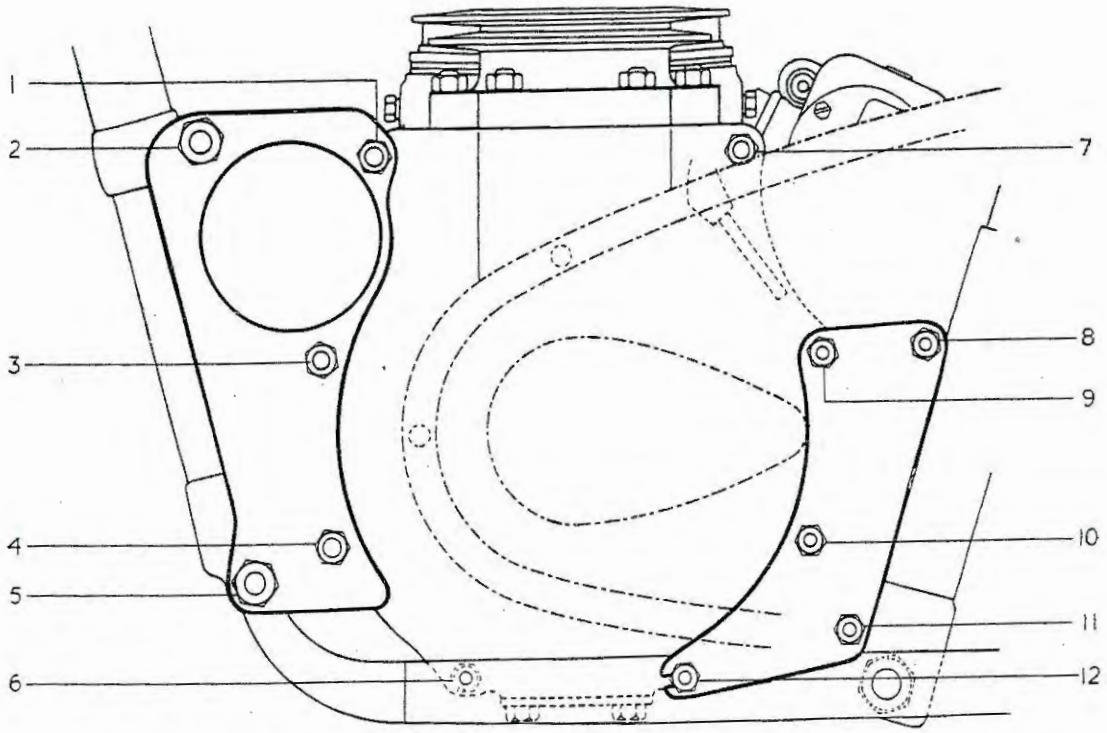

CRANKCASE AND FRAME STUDS, BOLTS, NUTS AND WASHERS

INDEX

5T, 6T AND T100 MODELS

Illust. No.	Part No.	
1, 3, 4	F.1711	Stud
	PO.172A	Nut
	S.26-1	Washer
2	F.2414	Stud
	DS.47	Nut
	PCW73A	Washer
5	F.1680	Stud
	DS.47	Nut
	PCW73A	Washer
6	T.456	Stud
	S.1-51	Nut
	S.25-3	Washer
7	E.1555	Bolt
	S.25-3	Washer
8, 9, 10	F.839	Stud
11 & 12	PO.172A	Nut
	S.26-1	Washer

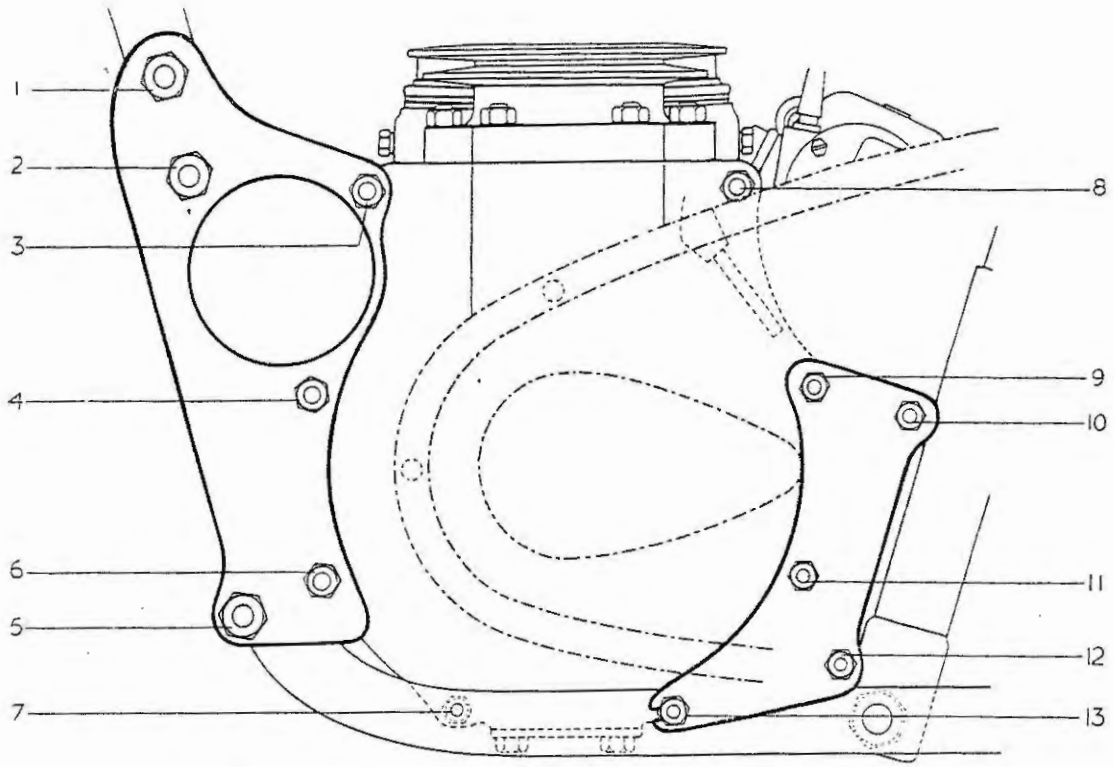

CRANKCASE AND FRAME STUDS, BOLTS, NUTS AND WASHERS

INDEX

TR5 MODELS

Illust. No.	Part No.	
1, 2, 3 & 4	F.1711	Stud
	PO.172A	Nut
	S.26-1	Washer
5, 9, 11 & 13	F.839	Stud
	PO.172A	Nut
	S.26-1	Washer
6	F.1711	Stud
	E.3004	Nut
	S.26-1	Washer
7	T.456	Stud
	S.1-51	Nut
	S.25-3	Washer
8	E.1555	Bolt
	S.25-3	Washer
10 & 12	E.522	Stud
	S.1-51	Nut
	S.25-3	Washer

CRANKCASE UNDERSHIELD GROUP

REF. No.	PART No.	DESCRIPTION	5T	6T	TRS	T100
1	F3079	Undershield, crankcase	—	—	1	—
2	F3078	Bracket, undershield	—	—	1	—
3	F1379	Bolt, ,, ...	—	—	2	—
4	F879	Nut, ,, ...	—	—	2	—
5	S26-2	Washer, ,, ...	—	—	2	—

ENGINE PLATE GROUP

6	E2222	Plate, engine front assembly L/H	1	1	—	1
7	E2223	,, ,, ,, ,, R/H	1	1	—	1
8	F2979	,, ,, ,, ,, ...	—	—	1	—
9	F1811	,, ,, rear ,, L/H	1	1	—	1
10	F2884	,, ,, ,, ,, ,, ...	—	—	1	—
11	F1811A	,, ,, ,, ,, R/H	1	1	—	1
12	F2885A	,, ,, ,, ,, ,, ...	—	—	1	—
13	F1117	Dowel, ,, ,, R/H plate	2	2	2	2
14	F2275	Cover, ,, plate front	1	1	—	1
15	F2414	Stud, $\frac{7}{16}'' \times 4\frac{1}{8}''$ C.E.I.	1	1	—	1
16	F1711	,, $\frac{1}{4}'' \times 4\frac{1}{16}''$,, ...	3	3	5	3
17	E522	,, $\frac{5}{16}'' \times 4\frac{1}{4}''$,, ...	—	—	1	—
18	F839	,, $\frac{3}{8}'' \times 4\frac{7}{16}''$,, ...	5	5	4	5
19	F1680	,, $\frac{7}{16}'' \times 4\frac{3}{8}''$,, ...	1	1	—	1
20	DS47	Nut, for F2414, F1680 Studs	4	4	—	4
21	PO172A	,, ,, F1023, F1711, F839 Studs	16	16	16	16
22	F3004	,, ,, F1711 Stud (lower)	—	—	2	—
23	S1-51	,, ,, T456, E522 Studs	2	2	2	2
24	PCW73A	Washer, for E2414, F1680 Studs	4	4	—	4
25	S26-1	,, ,, F1711, F839 Studs	16	16	18	16
26	S25-3	,, ,, T456 Studs	2	2	2	2
27	S26-3	,, ,, E522 Studs	—	—	4	—
28	F3017	Distance piece for E522 Stud	—	—	4	—

BATTERY CARRIER GROUP

29	F1670	Carrier assembly, battery	1	1	—	1
30	F1670A	,, ,, ,, ...	—	—	1	—
31	E534	Swivel, carrier strap plain	1	1	1	1
32	E535	,, ,, ,, tapped	1	1	1	1
33	E536	Bolt, ,, ,, swivel	1	1	1	1
34	F1667	Strap, ,, top	1	1	1	1
35	F1668	,, ,, front	1	1	1	1
36	F1727	Pin, ,, strap hinge	2	2	2	2
37	F1682	Stud, ,, to seat tube boss	1	1	—	1
38	S1-51	Nut, ,, ,, ,, ,, ,, stud ...	1	1	—	1
39	NW258	Bolt, ,, top to sleeve nut	—	—	1	—
40	F1715	,, ,, to primary cover	2	2	—	2
41	F3062	,, ,, ,, ,, ,, ...	—	—	2	—
42	F3061	Distance piece for F3062 bolt	—	—	2	—

PLEASE STATE COLOUR WHEN ORDERING

FRONT FORK GROUP

REF. No.	PART No.	DESCRIPTION	5T	6T	TR5	T100
1	H791	Fork assembly	1	—	—	1
2	H797	,, ,, ...	—	1	—	—
3	H788	,, ,, ...	—	—	1	—
4	H663A	Lug, fork head top	1	1	—	1
5	H789	,, ,, ,, ,, c/w clips	—	—	1	—
6	F1760	Bolt, ,, ,, ,, lug pinch	1	1	1	1
7	H379	Nut, ,, ,, ,, bolt	1	1	1	1
8	H660	"U" bolt, handlebar clamp	2	2	—	2
9	S25-3	Washer, ,, ,, ...	4	4	—	4
10	S1-51	Nut, ,, ,, ...	4	4	—	4
11	H722	Cap, handlebar clamp	—	—	2	—
12	H436	Bolt, ,, ,, cap	—	—	4	—
13	H695	Crown and stem, fork	1	1	—	1
14	H790	,, ,, ,, ,, ...	—	—	1	—
15	H405	Nut, crown and stem sleeve	1	1	1	1
16	H570	Bolt, ,, ,, ,, to stanchion	2	2	2	2
17	H518	Nut, ,, ,, ,, ,, ,, ...	2	2	2	2
18	H723	,, ,, ,, ,, ,, ,, ...	—	—	2	—
19	S25-3	Washer, crown and stem to stanchion ...	2	2	2	2
20	H799	Cover, nacelle L/H	1	1	—	1
21	H800	,, ,, R/H	1	1	—	1
22	H421	,, top c/w headlamp bracket L/H	—	—	1	—
23	H422	,, ,, ,, ,, ,, ...	—	—	1	—
24	H761	Top unit, nacelle	1	1	—	1
25	A46	Transfer, Thunderbird	—	1	—	—
26	H669	Grommet, handlebar rubber	2	2	—	2
27	H689	Screw, top unit to nacelle cover	2	2	—	2
28	H691	Nut, for H689	2	2	—	2
29	E2880	Washer, for H691	2	2	—	2
30	H623	Motif (flash) L/H	1	1	—	1
31	H624	,, ,, R/H	1	1	—	1
32	H688	Screw, motif front	2	2	—	2
33	H691	Nut, ,, ,, ...	2	2	—	2
34	E2880	,, ,, ,, ...	2	2	—	2
35	H687	Screw, top unit to nacslle cover	2	2	—	2
36	H420	Washer, cover tube felt	2	2	2	2
37	H414	Cover, bottom tube with spindle lug L/H ...	1	1	1	1
38	H415	,, ,, ,, ,, ,, ,, R/H ...	1	1	1	1
39	H519	Plug, cover tube bottom drain	2	2	2	2
40	H430	Washer, cover tube bottom drain	2	2	2	2
41	F1760	Bolt, spindle lug pinch L/H	1	1	1	1
42	H379	Nut, ,, ,, ,, ,, ...	1	1	1	1

PLEASE STATE COLOUR WHEN ORDERING

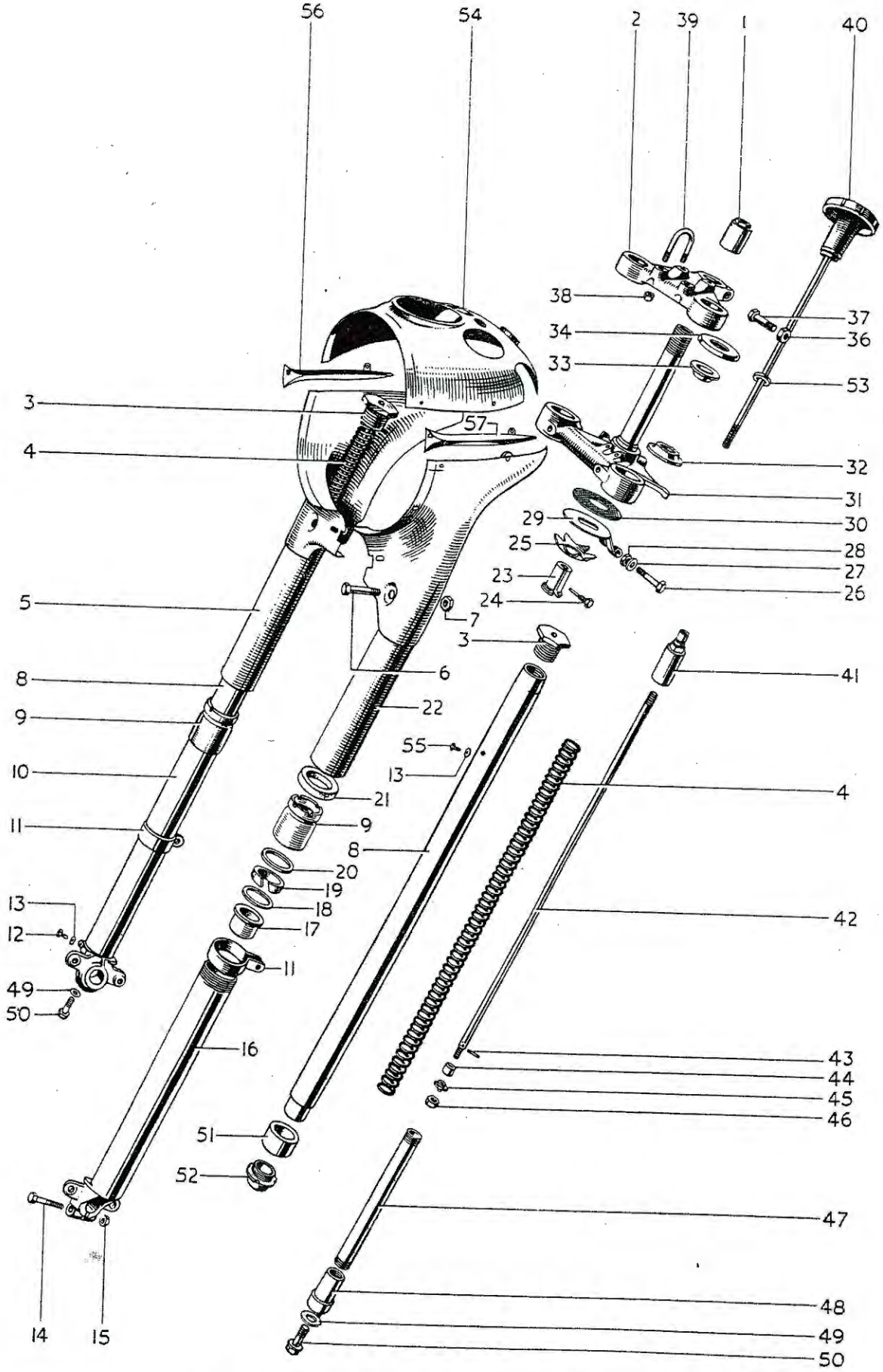

5T, 6T AND T100 TELESCOPIC FORK

REF. No.	PART No.	DESCRIPTION	5T	6T	TR5	T100
1	H390	Sleeve, cover tube dust excluder	2	2	2	2
2	H391	Washer, ,, ,, ,, ,, felt	2	2	2	2
3	H445	Washer, inner—for H391	2	2	2	2
4	H431	,, outer— ,, ,, ...	2	2	2	2
5	H441	Bearing, bottom cover tube	2	2	2	2
6	H382A	Stanchion	2	2	—	2
7	H382	,, ...	—	—	2	—
8	HS19A	Plug, stanchion oil filler	2	2	—	2
9	H430	Washer ,, ,, ,, ...	2	2	—	2
10	H432A	Nut, ,, upper sleeve cap	2	2	—	2
11	H432	,, ,, ,, ,, ,, ...	—	—	2	—
12	H443	Bearing, stanchion lower	2	2	2	2
13	H444	Nut, ,, hydraulic stop	2	2	2	2

MODELS 5T, 6T AND T100
INDEX TO ILLUSTRATION ON PAGE 52

Illust. No.	Part No.	Page No.	Ref. No.	Illust. No.	Part No.	Page No.	Ref. No.
1	H.404	51	15	29	H.413	56	28
2	H.663A	51	4	30	H.435	56	34
3	H.432A	53	10	31	H.695	51	13
4	H.750	56	1	32	H.439	56	20
	H.505	56	2	33	H.438	56	19
5	H.800	51	21	34	H.407	56	23
6	H.570	51	16	36	H.379	51	7
7	H.518	51	17	37	F.1760	51	6
8	H.382A	53	6	38	S.1-51	51	10
9	H.390	53	1	39	H.660	51	8
10	H.415	51	38	40	H.536	56	24
11	H.428	66	8	41	H.397	56	13
12	H.519	51	39	42	H.399A	56	5
13	H.430	51	40	43	H.454	56	9
14	F.1760	51	41	44	H.453	56	8
15	H.379	51	42	45	H.452	56	7
16	H.414	51	37	46	F.879	56	10
17	H.441	53	5	47	H.394	56	11
18	H.431	53	4	48	H.395	56	12
19	H.391	53	2	49	E.1335	56	16
20	H.445	53	3	50	H.398	56	15
21	H.420	51	36	51	H.443	53	12
22	H.799	51	20	52	H.444	53	13
23	H.408	56	26	53	H.565	56	25
24	H.409	56	27	54	H.761	51	24
25	H.95	56	35	55	H.519A	53	8
26	F.1718	56	30	56	H.624	51	31
27	S.25-3	56	33	57	H.623	51	30
28	S.1-51	56	31				

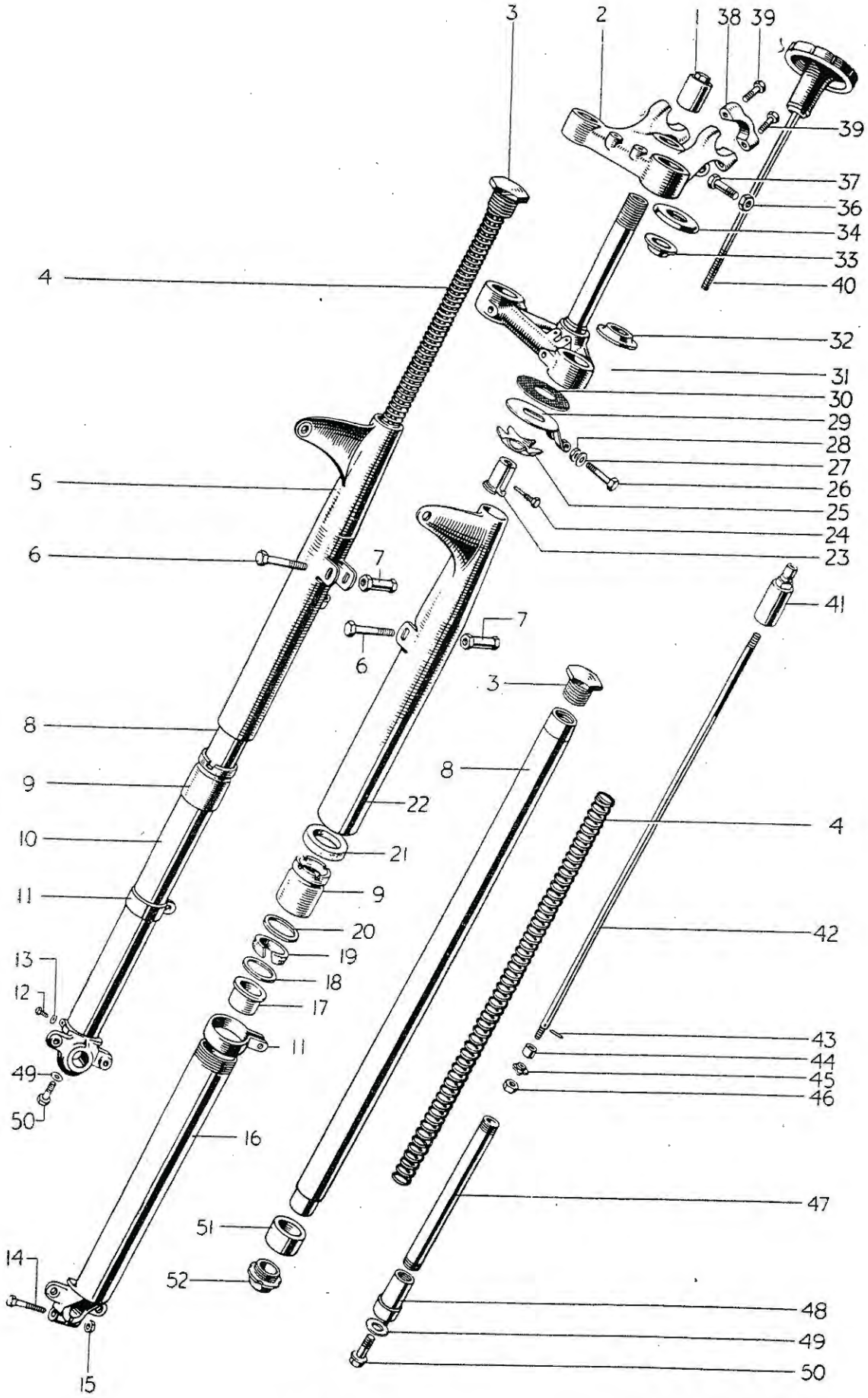

TR5 TELESCOPIC FORK

TR5 MODEL

INDEX TO ILLUSTRATION ON PAGE 54

Illust. No.	Part No.	Page No.	Ref. No.	Illust. No.	Part No.	Page No.	Ref. No.
1	H.405	51	15	27	S.25-3	56	33
2	H.789	51	5	28	H.518	56	32
3	H.432	53	11	29	H.724	56	29
4	H.750	56	1	30	H.435	56	34
5	H.422	51	23	31	H.790	51	14
6	H.570	51	16	32	H.439	56	20
7	H.723	51	18	33	H.438	56	19
8	H.382	53	7	34	H.407	56	23
9	H.390	53	1	36	H.379	51	7
10	H.415	51	38	37	F.1760	51	6
11	H.428	66	8	38	H.722	51	11
12	H.519	51	39	39	H.436	51	12
13	H.430	51	40	40	H.536	56	24
14	F.1760	51	41	41	H.397	56	13
15	H.379	51	42	42	H.399	56	6
16	H.414	51	37	43	H.454	56	9
17	H.441	53	5	44	H.453	56	8
18	H.431	53	4	45	H.452	56	7
19	H.391	53	2	46	F.879	56	10
20	H.445	53	3	47	H.394	56	11
21	H.420	51	36	48	H.395	56	12
22	H.421	51	22	49	E.1335	56	16
23	H.408	56	26	50	H.398	56	15
24	H.409	56	27	51	H.443	53	12
25	H.95	56	35	52	H.444	53	13
26	F.1718	56	30				

REF. No.	PART No.	DESCRIPTION	5T	6T	TR5	T100
1	H750	Spring, main (identification GREEN)	2	2	2	2
2	H505	,, ,, (,, BLUE) Sidecar ...	2	2	—	2
3	H521A	Pressure tube assembly	2	2	—	2
4	H521	,, ,, ,, ...	—	—	2	—
5	H399A	Rod, oil pressure	2	2	—	2
6	H399	,, ,, ,, ...	—	—	2	—
7	H452	Restrictor, oil	2	2	2	2
8	H453	Cup, oil restrictor rod	2	2	2	2
9	H454	Pin, ,, ,, ,, cup	2	2	2	2
10	F879	Nut, ,, ,, ,, ...	2	2	2	2
11	H394	Tube,pressure	2	2	2	2
12	H395	Body, ,, tube valve	2	2	2	2
13	H397	Sleeve, ,, ,, support	2	2	2	2
14	H500	Pin, valve body	2	2	2	2
15	H398	Bolt, ,, ,, to lug	2	2	2	2
16	E1335	Washer, valve body to lug bolt	2	2	2	2
		STEERING CUPS, CONES AND BALLS				
17	H437	Cup, frame lug, top	1	1	1	1
18	H111	,, ,, ,, bottom	1	1	1	1
19	H438	Cone, head lug, top	1	1	1	1
20	H439	Cone, crown and stem, bottom	1	1	1	1
21	S70-4	Ball, top race $\frac{3}{16}''$	22	22	22	22
22	S70-3	Ball, bottom race $\frac{1}{4}''$	20	20	20	20
23	H407	Cover, top cone dust	1	1	1	1
		STEERING DAMPER				
24	H536	Knob, c/w rod	1	1	1	1
25	H565	Washer, damper knob abutment	1	1	1	1
26	H408	Sleeve, ,, adjusting	1	1	1	1
27	H409	Pin, sleeve securing	1	1	1	1
28	H413	Plate, damper anchor	1	1	—	1
29	H724	,, ,, ,, ...	—	—	1	—
30	F1718	Bolt, damper anchor plate	1	1	1	1
31	S1-51	Nut, ,, ,, ,, ...	1	1	—	1
32	H518	Nut, ,, ,, ,, ...	—	—	1	—
33	S25-3	Washer, ,, ,, ,, ...	1	1	1	1
34	H435	Disc, ,, ,, ,, friction	1	1	1	1
35	H95	Plate, ,, ,, ,, spring	1	1	1	1
		STAND GROUP				
		FRONT STAND				
36	H412	Stand assembly, front	1	1	1	1
37	F3146	,, ,, ,, ...	—	—	1	—
38	DS55	Bolt, front guard to stand	1	1	1	1
39	S1-51	Nut, ,, ,, ,, ,, bolt	1	1	1	1
40	NS362	,, ,, stand to guard spigot	1	1	1	1
41	H424	Screw, ,, ,, ,, fork pivot	2	2	2	2
42	S25-3	Washer, pivot screw plain	2	2	2	2
43	H425	,, ,, ,, spring	2	2	2	2

ALL GOODS SENT TO WORKS MUST BE CARRIAGE PAID

REF. No.	PART No.	DESCRIPTION	5T	6T	TR5	T100
		REAR STAND				
1	F1834	Stand assembly, rear	1	1	1	1
2	F975A	Spring, rear stand	1	1	1	1
3	F977	Bolt, ,, ,, pivot	2	2	2	2
4	W630	Nut, ,, ,, ,, bolt	2	2	2	2
5	F976	Washer, rear stand pivot bolt	2	2	2	2

FRONT WHEEL GROUP

NOTE.—Spokes with specially angled heads ensures very sturdy wheel construction. To maintain this condition, state clearly when ordering sundry spokes :

(*a*) Side of wheel, *i.e.*, brake side or reverse ; L/H or R/H

(*b*) Whether head of spoke is toward or away from wheel centre

98° Towards centre — 99° Away from centre

88° ,, ,, — 90° ,, ,, ,,

6	W937	Wheel, front complete	1	1	—	1
7	W944	,, ,, ,, ...	—	—	1	—
8	W938	,, ,, less internal and brake fittings ...	1	1	—	1
9	W945	,, ,, ,, ,, ,, ,, ,, ...	—	—	1	—
10	W351	Rim, front wheel WM2-19	1	1	—	1
11	W870	,, ,, ,, WM1-20	—	—	1	—
12	*W660	Spoke, long, $8\frac{11}{32}''$ × 10G—88° L/H	10	10	—	10
13	*W661	,, ,, $8\frac{11}{32}''$ × 10G—90° L/H	10	10	—	10
14	*W354	,, ,, $9\frac{3}{8}''$ × 10G—78° L/H	—	—	10	—
15	*W354X	,, ,, $9\frac{3}{8}''$ × 10G—99° L/H	—	—	10	—
16	*W933	Spoke, short $6\frac{3}{8}''$ × 10G—83° R/H	10	10	—	10
17	*W934	,, ,, $6\frac{3}{8}''$ × 10G—94° R/H	10	10	—	10
18	*W942	,, ,, $7\frac{15}{16}''$ × 10G—81° R/H	—	—	10	—
19	*W943	,, ,, $7\frac{15}{16}''$ × 10G—96° R/H	—	—	10	—
20	*S79-2	Nipple, spoke	40	40	40	40
21	W573A	Hub	1	1	1	1
22	W940	Drum, brake	1	1	1	1
23	W62	Bolt, ,, ,, drum to hub	8	8	8	8
24	S1-51	Nut, ,, ,, ,, ,, ...	8	8	8	8
25	W63	Lockplate, brake drum nut	4	4	4	4
26	W578	Spindle, front wheel hub	1	1	1	1
27	W761	Sleeve and collar, spindle	1	1	1	1
28	W544	Nut, spindle	1	1	1	1
29	W545	Washer, spindle nut	1	1	1	1
30	W653	Bearing, front wheel hub	2	2	2	2
31	W581	Distance piece, bearing	1	1	1	1
32	W582	Ring nut, bearing retaining	1	1	1	1
33	W583	Cap, bearing dust	1	1	1	1

*Spokes and Nipples are not supplied separately

		FRONT WHEEL BRAKE				
34	W585	Plate, front brake anchor	1	1	1	1
35	W588	Pin, ,, ,, shoe fulcrum	1	1	1	1
36	PO172A	Nut, fulcrum pin	1	1	1	1
37	S25-2	Washer fulcrum pin	1	1	1	1
38	W93	Shoe, brake c/w lining	2	2	2	2

PLEASE STATE COLOUR WHEN ORDERING

FRONT WHEEL INDEX

Illust. No.	Part No.	Page No.	Ref. No.	Illust. No.	Part No.	Page No.	Ref. No.
1	W.578	57	26	13	W.93	57	38
2	W.761	57	27	14	W.135	60	3
3	W.583	57	33	15	W.386A	60	4
4	W.653	57	30	16	W.585	57	34
5	W.581	57	31	17	W.588	57	35
6	W.940	57	22	18	S.25-2	57	37
7	W.545	57	29	19	PO.172A	57	36
8	W.544	57	28	20	W.592	60	8
9	W.582	57	32	21	W.589	60	5
10	S.1-51	57	24	22	S.25-6	60	7
11	W.63	57	25	23	S.1-52	60	6
12	W.573A	57	21				

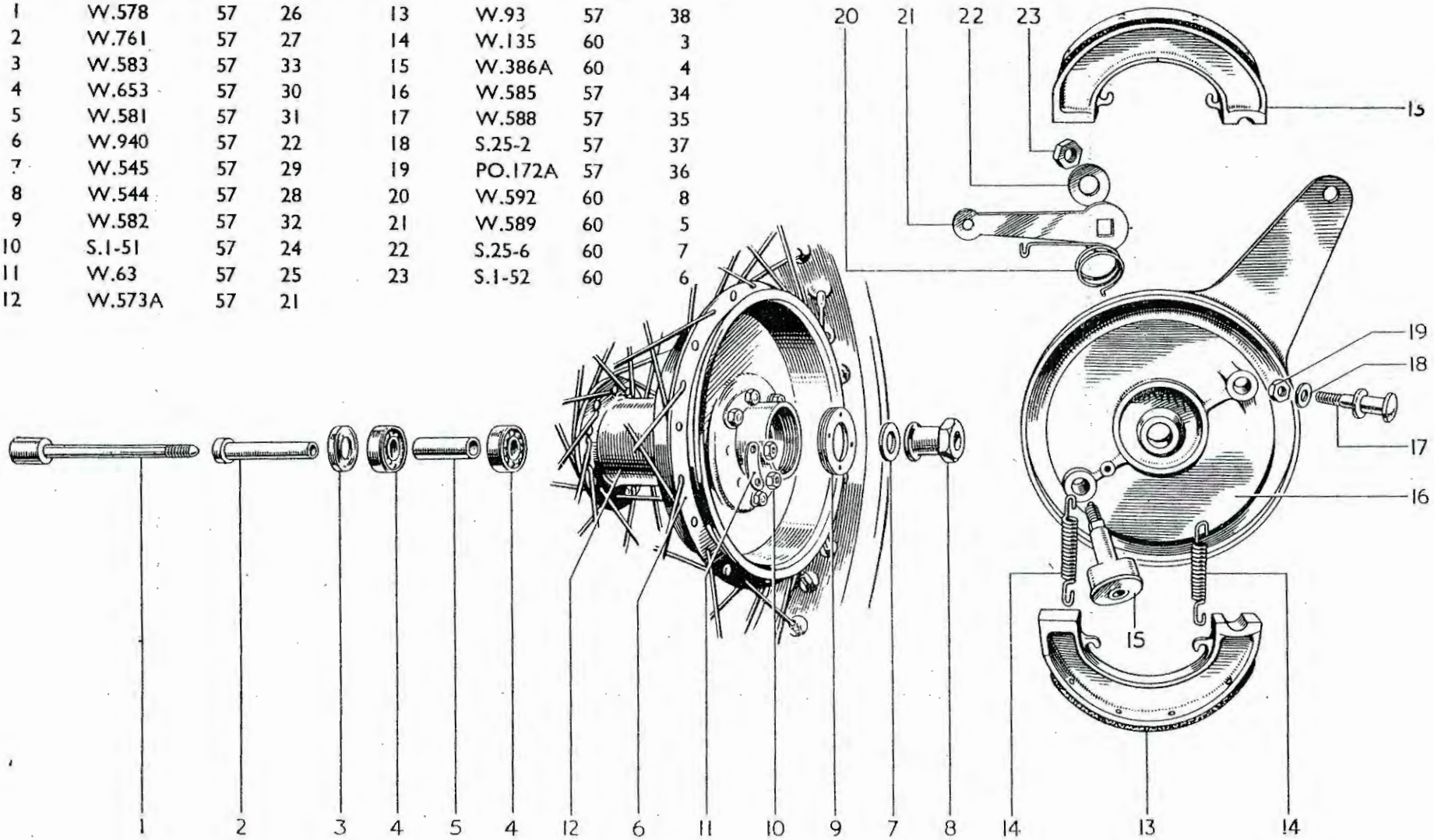

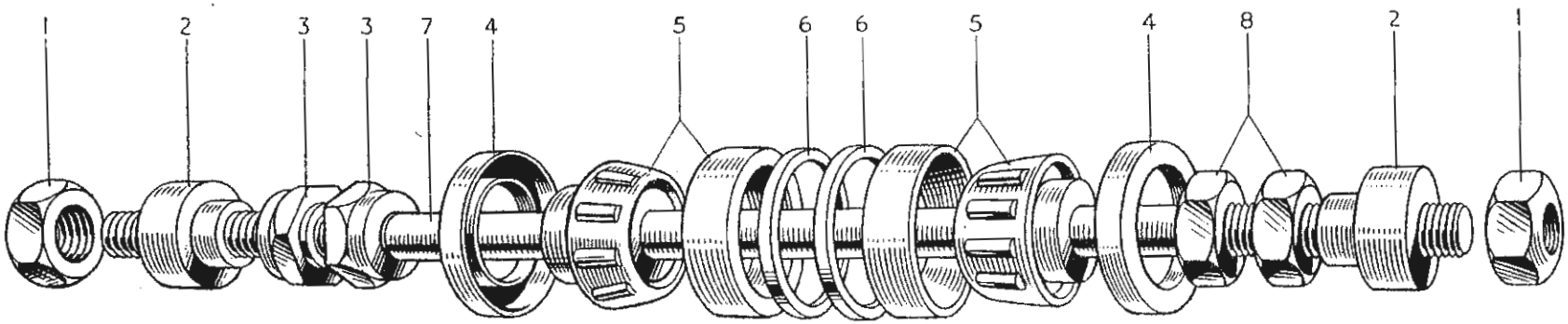

REAR WHEEL SPINDLE ASSEMBLY

INDEX

Illust. No.	Part No.	Page No.	Ref. No.	Illust. No.	Part No.	Page No.	Ref. No.
1	TS.42	60	25	5	W.7A	60	26
2	W.6	60	30	6	NW.225	60	27
3	W.5	60	34	7	W.61	60	24
4	W.12	60	28	8	W.4	60	29

REF. No.	PART No.	DESCRIPTION	3T	5T	6T	TR5	T100
1	NW243	Lining, brake shoe	2	2	2	2
2	W129	Rivets, ,, ,, lining	16	16	16	16
3	W135	Spring, ,, ,, return	2	2	2	2
4	W386A	Cam, brake operating	1	1	1	1
5	W589	Lever, brake cone	1	1	1	1
6	S1-52	Nut, ,, ,, lever	1	1	1	1
7	S25-6	Washer, ,, ,, ,, ...	1	1	1	1
8	W592	Spring, ,, ,, ,, return	1	1	1	1
9	WF32	Pin, ,, ,, ,, pivot	1	1	1	1
		$\frac{1}{16}'' \times \frac{1}{2}''$ Split pin, pivot pin	1	1	1	1

REAR WHEEL GROUP (RIGID)

	W949	Wheel, rear complete	1	1	—	1
10	W950	,, ,, ,, ...	—	—	1	—
11	W860	,, less internals and brake fittings ...	1	1	—	1
12	W889	,, ,, ,, ,, ,, ,, ...	—	—	1	—
13	W79A	Rim, rear wheel WM2-19	1	1	—	1
14	W270A	Rim, rear wheel WM3-J9	—	—	1	—
15	*NW125	Spoke, $8\frac{3}{4}'' \times$ 9G—100°	20	20	20	20
16	*NW125X	,, $8\frac{3}{4}'' \times$ 9G—76°	20	20	20	20
17	*TW5	Nipple, spoke	40	40	40	40
18	W861	Hub	1	1	1	1
19	W951	Sprocket and drum (46T)	1	1	1	1
20	W62	Bolt, sprocket and drum to hub	8	8	8	8
21	S1-51	Nut, ,, ,, ,, ,, ,, ...	8	8	8	8
22	W63	Lockplate, sprocket and drum nut	4	4	4	4
23	W61	Spindle, rear wheel hub	1	1	1	1
24	TS42	Nut, ,, ,, spindle	2	2	2	2
25	W7A	Bearing, ,, ,, ...	2	2	2	2
26	NW225	Ring, bearing backing	2	2	2	2
27	W12	Cap, ,, dust	2	2	2	2
28	W4	Nut, ,, adjusting lock	2	2	2	2
29	W6	Collar, chain adjuster thrust	2	2	2	2
30	D106	Bolt, tyre security	1	1	—	1
31	WM3	,, ,, ,, ...	—	—	1	—
32						

* Spokes and nipples are not supplied separately

REAR WHEEL BRAKE

33	W762	Plate, rear brake anchor	1	1	1	1
34	W5	Locknut, rear brake anchor plate	2	2	2	2
35	W93	Shoe assembly, rear with lining	2	2	2	2
36	NW243	Lining, rear brake shoe	2	2	2	2
37	W129	Rivet, brake shoe lining	16	16	16	16
38	W135	Spring, brake shoe return	2	2	2	2
39	W856	Cam assembly, rear brake	1	1	1	1
40	W74A	Lever, rear brake cam	1	1	1	1
41	S1-52	Nut, ,, ,, ,, lever	1	1	1	1
42	W123	Spring, ,, ,, ,, ,, return	1	1	1	1

DO NOT FORGET TO SIGN YOUR ORDER

REAR SPRING WHEEL GROUP

MARK 2

REF. No.	PART No.	DESCRIPTION	5T	6T	TR5	T100
1	W925A	Wheel, rear spring, complete	1	1	—	1
2	W924A	,, ,, ,, ,, ...	—	—	1	—
3	W643	Rim, ,, ,, wheel W2-19	1	1	—	1
4	W894	,, ,, ,, ,, W3-18	—	—	1	—
5	W644	Spoke	40	40	40	40
6	S79-2	Nipple, spoke	40	40	40	40
7	W905	Hub	1	1	1	1
8	W903	Drum, sprocket and brake	1	1	1	1
9	W641	Bolt, brake drum to hub	8	8	8	8
10	W642	Lockplate, brake drum bolt, ...	4	4	4	4
11	F879	Nut, brake drum bolt	8	8	8	8
12	W897	Bearing, wheel	2	2	2	2
13	W904	Spacer ring, bearing L/H	1	1	1	1
14	W909	End plate, hub	1	1	1	1
15	W744	Shim, end plate	9	9	9	9
16	W640	Bolt, end plate to hub shell	10	10	10	10
17	E2312	Washer, end plate to hub shell	10	10	10	10
18	F879	Nut, end plate to hub shell	10	10	10	10
19	W931	Plunger, guide box assembly	1	1	1	1
20	W906/7	Box, plunger guide	1	1	1	1
21	W935	Pad, front slipper (Convex)	2	2	2	2
22	W936	,, rear ,, (Concave)	2	2	2	2
23	W866	Shim, slipper pad .002″ thick		As required		
24	W867	,, ,, ,, .003″ ,, ...		As required		
25	W638	Screw, ,, ,, ...	8	8	8	8
26	E1562	Bolt, plunger guide box (top rear and bottom				
27		front)	2	2	2	2
28	W932	Bolt, plunger guide box	4	4	4	4
29	E2312	Washer, ,, ,, ,, bolt	6	6	6	6
30	S1-40	Nut, ,, ,, ,, ,, ...	6	6	6	6
31	W895	Axle and guide assembly	1	1	1	1
32	W908	Roller, slipper	2	2	2	2
33	W766	Sleeve, slipper roller distance L/H	1	1	1	1
34	W837	Spring, inner main	1	1	1	1
35	W836	,, outer main	1	1	1	1
36	W890	,, rebound	1	1	1	1
37	W941	Plate, spring locator	2	2	2	2
38	W658A	Buffer, spring (rubber)	2	2	2	2
39	W639	Lever, axle shaft anchorage	1	1	1	1
40	W634	Circlip, axle shaft split	2	2	2	2
41	W798	Collar, ,, ,, distance R/H	1	1	1	1
42	W633	,, ,, ,, outer	2	2	2	2
43	W635	Nut, axle shaft	2	2	2	2
44	W901	Cover, dust excluder L/H	1	1	1	1
45	H687	Screw, ,, ,, cover	2	2	2	2
46	GS299	Washer, ,, ,, ,, ...	2	2	2	2

PLEASE STATE COLOUR WHEN ORDERING

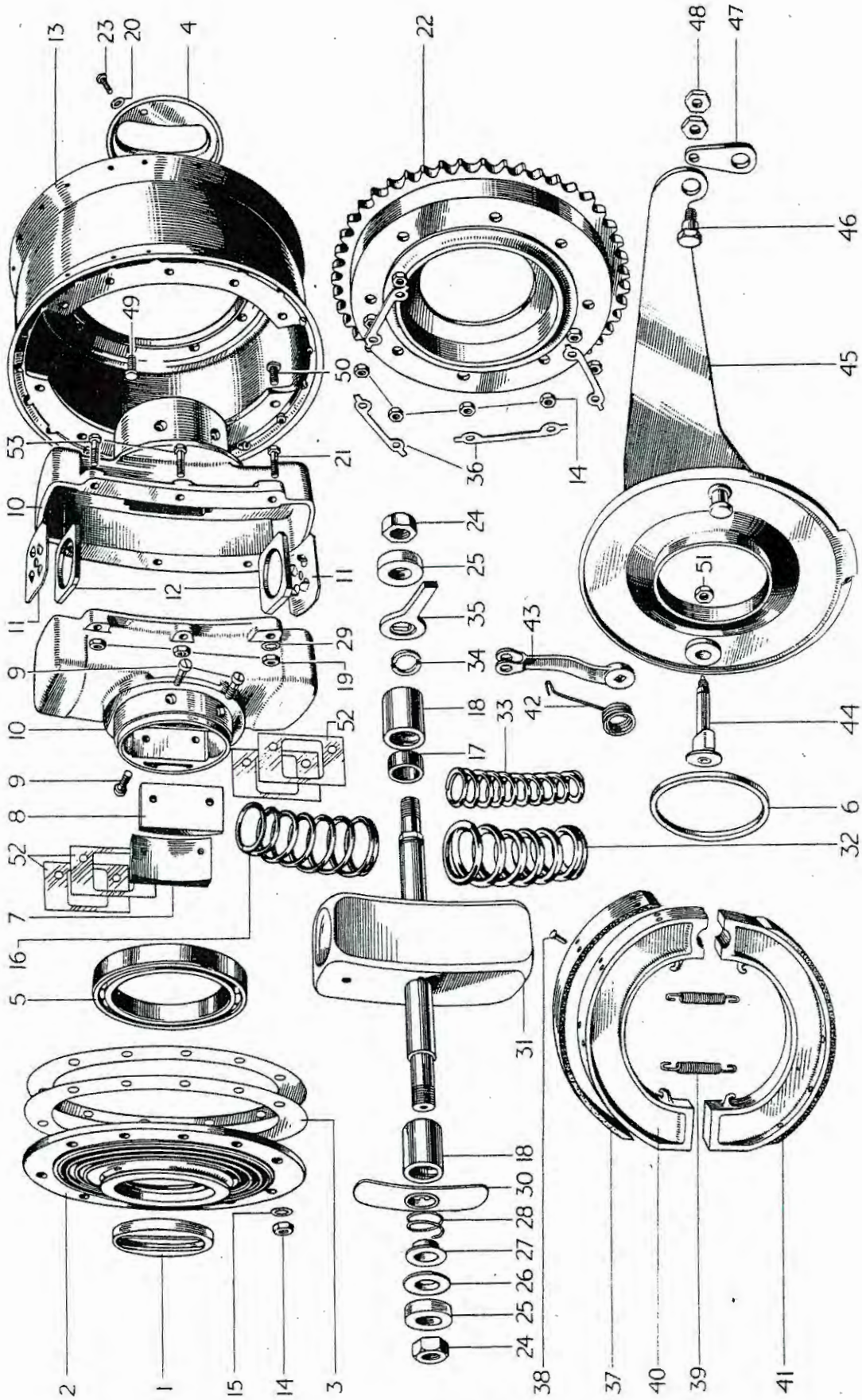

MARK 2—SPRING WHEEL

REF. No.	PART No.	DESCRIPTION	5T	6T	TR5	T100
1	W849	Cover, dust excluder R/H	1	1	1	1
2	W898	Plate, ,, ,, ...	2	2	2	2
3	W799	Spring, ,, ,, plate	2	2	2	2
4	W900	Sleeve, ,, ,, ,, centre	2	2	2	2
5	D106	Bolt, tyre security	1	1	1	2
		SPRING WHEEL BRAKE				
6	W920A	Plate, brake anchor	—	—	1	—
7	W921A	,, ,, ,, ...	1	1	—	1
8	W911	Shoe, c/w lining.trailing brake	1	1	1	1
9	W912	,, ,, ,, ,, ,, ...	1	1	1	1
10	W631	Lining, brake	2	2	2	2
11	W129	Rivet, ,, shoe lining	16	16	16	16
12	W135	Spring, ,, ,, return	2	2	2	2
13	W856	Cam, brake operating	1	1	1	1
14	W74A	Lever, brake operating	1	1	1	1
15	S1-52	Nut, ,, ,, lever	1	1	1	1
16	W123	Spring, ,, ,, ,, return	1	1	1	1

SPRING WHEEL

INDEX TO ILLUSTRATION ON PAGE 62

Illust. No.	Part No.	Page No.	Ref. No.	Illust. No.	Part No.	Page No.	Ref. No.
1	W.849	63	1	29	E.2312	61	28
2	W.909	61	14	30	W.898	63	2
3	W.744	61	15	31	W.895	61	30
4	W.901	61	43	32	W.836	61	34
5	W.897	61	12	33	W.837	61	33
6	W.904	61	13	34	W.634	61	39
7	W.936	61	22	35	W.639	61	38
8	W.935	61	21	36	W.642	61	10
9	W.638	61	25	37	W.631	63	10
10	W.906/7	61	20	38	W.129	63	11
11	W.941	61	36	39	W.135	63	12
12	W.658A	61	37	40	W.912	63	9
13	W.905	61	7	41	W.911	63	8
14	F.879	61	18	42	W.123	63	16
15	E.2312	61	17	43	W.74A	63	14
16	W.890	61	35	44	W.856	63	13
17	W.766	61	32	45	W.920A	63	6
18	W.908	61	31		W.921A	63	7
19	S.1-40	61	29	46	W.784	65	3
20	GS.299	61	45	47	W.626	65	1
21	E.1562	61	26		W.855	65	2
22	W.903	61	8	48	W.630	65	4
23	H.687	61	44	49	W.641	61	9
24	W.635	61	42	50	W.640	61	16
25	W.633	61	41	51	S.1-52	63	15
26	W.798	61	40	52	W.866	61	23
27	W.900	63	4		W.867	61	24
28	W.799	63	3	53	W.932	61	27

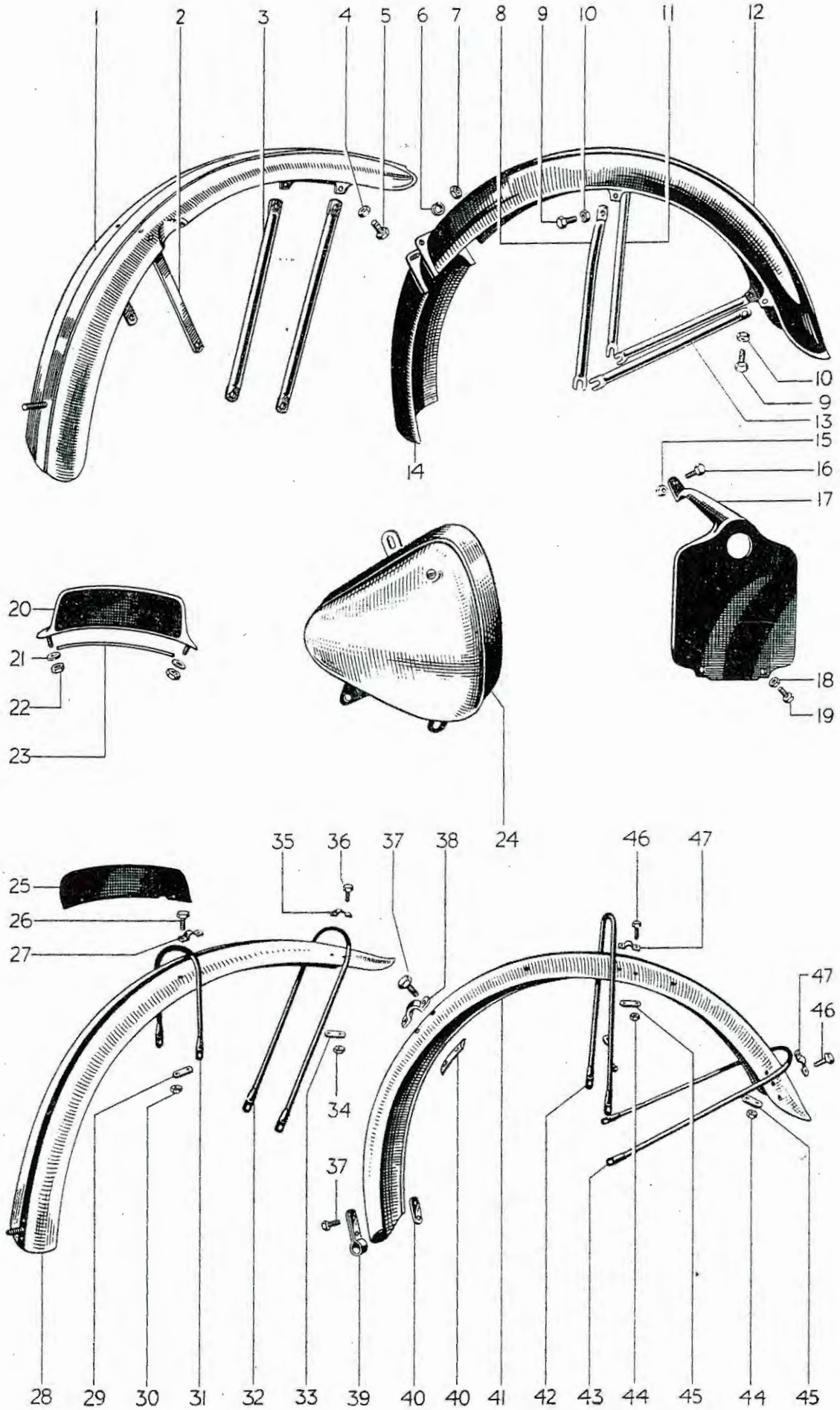

FRONT AND REAR MUDGUARDS

REF. No.	PART No.	DESCRIPTION	5T	6T	TR5	T100
1	W626	Link, brake anchorage	1	1	—	1
2	W855	,, ,, ,, ...	—	—	1	—
3	W784	Bolt, ,, ,, ...	1	1	1	1
4	W630	Nut, ,, ,, bolt	2	2	2	2
5	W743	Nut, brake anchorage to spindle	1	1	1	1
6		$\frac{3}{32}'' \times 1''$ split pin, for W743 nut	1	1	1	1
7	F1015C	Rod, brake operating	—	—	1	—
8	F1015B	,, ,, ,, ...	1	1	—	1

MUDGUARD GROUP

FRONT MUDGUARD

9	H566	Mudguard assembly, less front stays	1	1	—	1
10	H716	Blade only, front mudguard	—	—	1	—
11	H569	Stay, ,, ,, ...	2	2	—	2
12	H719	,, ,, ,, ...	—	—	1	—
13	H532	Clip, ,, ,, stay	—	—	2	—
14	H533	Backing strip, clip	—	—	2	—
15	DS57	Bolt, stay to mudguard	2	2	4	2
16	E1612	Washer, stay to mudguard bolt...	2	2	4	2
17	F879	Nut, ,, ,, ,, ,, ...	2	2	4	2

MUDGUARDS

INDEX TO ILLUSTRATION ON PAGE 64

Illust. No.	Part No.	Page No.	Ref. No.	Illust. No.	Part No.	Page No.	Ref. No.
1	H.566	65	9	24	F.1692A	82	21
2	H.427	65	1	25	F.2996	67	2
3	H.569	65	11	26	DS.57	66	5
4	F.879	65	17	27	H.532	66	3
5	DS.57	65	15	28	H.716	65	10
6	S.26-2	65	47	29	H.533	66	4
7	E.1720	66	46	30	F.879	66	7
8	F.2761	66	24	31	H.717	66	2
9	F.2335	66	29	32	H.719	65	12
10	S.1-51	66	31	33	H.533	65	14
11	F.2763	66	25	34	F.879	65	17
	F.3170	66	23	35	H.532	65	13
12	F.3012	66	20	36	DS.57	65	15
13	F.2764	66	26	37	S.23-42	66	40
14	F.2756	66	18	38	PF.204	66	38
	F.3330	66	19	39	F.2717	66	37
15	S.1-51	67	11	40	F.444	66	39
16	F.929	67	10	41	F.2998	66	21
17	F.2728	67	9	42	F.2999	66	27
18	F.879	67	14	43	F.3001	66	28
19	F.1369	67	13	44	F.879	66	35
20	F.2698	67	1	45	H.533	66	33
21	S.26-2	67	7	46	DS.57	66	34
22	F.879	67	5	47	H.532	66	32
23	H.251	67	8				

REF. No.	PART No.	DESCRIPTION	5T	6T	TR5	T100
1	H427	Bridge, mudguard support	1	1	—	1
2	H717	Bridge, ,, ,, ...	—	—	1	—
3	H532	Clip, ,, ,, bridge	—	—	2	—
4	H533	Backing strip, clip	—	—	2	—
5	DS57	Bolt, bridge to mudguard	—	—	4	—
6	E1612	Washer, ,, ,, ,, bolt	—	—	4	—
7	F879	Nut, ,, ,, ,, ,, ...	—	—	4	—
8	H428	Clip, support bridge to fork	2	2	2	2
9	H426	Bolt, ,, ,, ,, ,, clip L/H ...	1	1	—	1
10	F1031	,, ,, ,, ,, ,, ,, ,, ...	—	—	1	—
11	H451	,, ,, ,, ,, ,, ,, R/H ...	1	1	—	1
12	H622	Bolt, support bridge to fork clip R/H ...	—	—	1	—
13	PO172A	Nut, clip bolt	2	2	2	2
14	S26-1	Washer, clip bolt nut	2	2	2	2
15	F929	Bolt, mudguard stay to fork end	2	2	—	2
16	F2335	,, ,, ,, ,, ,, ,, ...	—	—	2	—
17	S26-3	Washer, ,, ,, ,, ,, ,, ...	2	2	2	2
		REAR MUDGUARD				
18	F2756	Mudguard, front section	1	1	—	—
19	F3330	,, ,, ,, ...	—	—	—	1
20	F3012	,, rear ,, ...	1	1	—	1
21	F2998	Blade only, mudguard rear	—	—	1	—
22	F3327	Grommet, rubber	—	—	—	1
23	F3170	Stay, mudguard centre R/H	—	—	—	1
24	F2761	,, ,, ,, L/H	1	1	—	1
25	F2763	,, ,, ,, R/H	1	1	—	—
26	F2764	,, ,, rear	2	2	—	2
27	F2999	,, ,, centre	—	—	1	—
28	F3001	,, ,, rear	—	—	1	—
29	F2335	Bolt, stay to mudguard	4	4	—	4
30	E2287	Washer, stay to mudguard bolt	4	4	—	4
31	S1-51	Nut, ,, ,, ,, ,, ...	4	4	—	4
32	H532	Clip, centre and rear stay	—	—	4	—
33	H533	Backing strip, clip	—	—	4	—
34	DS57	Bolt, clip to mudguard	—	—	8	—
35	F879	Nut, ,, ,, ,, bolt	—	—	8	—
36	E1612	Washer, clip to mudguard bolt	—	—	8	—
37	F2717	Clip, mudguard to frame lower	—	—	1	—
38	PF204	,, ,, ,, ,, ,, ...	1	1	1	1
39	F444	Backing plate for PF204 clip	1	1	1	1
40	S23-42	Bolt, clip and backing plate	2	2	4	2
41	S25-1	Washer, clip and backing plate	2	2	4	2
42	E579	Bolt, mudguard stay to frame	2	2	—	2
43	F1031	,, ,, ,, ,, ,, ...	—	—	2	—
44	S25-2	Washer, ,, ,, ,, ,, bolt	2	2	—	2
45	F2908	Stud, mudguard, front to rear section ...	2	2	—	2
46	E1720	Nut, ,, ,, ,, ,, ,, ...	2	2	—	2
47	S26-2	Washer, ,, ,, ,, ,, ,, ...	2	2	—	2

SEE SPECIMEN ORDER IN PREFACE

NUMBER PLATE GROUP

REF. No.	PART No.	DESCRIPTION	5T	6T	TR5	T100
		FRONT NUMBER PLATE				
1	F2698	Plate assembly, number	1	1	—	1
2	F2996	,, number	—	—	1	—
3	H741	Clip, plate to mudguard c/w nut and bolt ...	—	—	2	—
4	H687	Screw, ,, ,, clip	—	—	2	—
5	F879	Nut, ,, stud	2	2	—	2
6	H745	,, ,, clip screw	—	—	2	—
7	S26-2	Washer, stud	2	2	—	2
8	H251	Beading, plate (rubber)	1	1	—	1
		REAR NUMBER PLATE				
9	F2728	Plate, rear number	1	1	1	1
10	F929	Bolt, ,, ,, plate top	1	1	1	1
11	S1-51	Nut, ,, ,, ,, ,, ...	1	1	1	1
12	S26-3	Washer, number plate top bolt	1	1	1	1
13	F1369	Bolt, ,, ,, bottom bolt	2	2	2	2
14	F879	Nut, ,, ,, ,, ,, ...	2	2	2	2
15	S26-2	Washer, ,, ,, ,, ,, ...	2	2	2	2
16	D68	Transfer, ,, ,, (gold and white) ...	1	1	—	—
17	D68A	,, ,, ,, (blue and white) ...	—	—	1	1

PRIMARY CHAINCASE GROUP

18	T480A	Cover, chaincase outer	1	1	—	1
19	T478A	,, ,, ,, ...	—	—	1	—
20	T1030	,, ,, inner	1	1	—	1
21	T1029	,, ,, ,, ...	—	—	1	—
22	NT367	Plug, chaincase oil filler	1	1	1	1
23	NT376	Washer, ,, ,, ,, plug	1	1	1	1
24	PCE102F	Plug, ,, ,, drain	1	1	1	1
25	WE170	Washer, ,, ,, ,, plug	1	1	1	1
26	NT316	Dowel, ,, to footrest	2	2	2	2
27	T1031	Plate, ,, oil retainer	1	1	1	1
28	T91	Plate, chaincase oil retainer spring	1	1	1	1
29	T177A	Rivet, ,, ,, ,, plate	2	2	2	2
30	T496	Adjuster, rear chain oiler	1	1	1	1
31	T497	Spring, ,, ,, ,, ...	1	1	1	1
32	T504	Washer, chaincase joint	1	1	—	1
33	T503	,, ,, ,, ...	—	—	1	—
34	E427	Screw, chaincase cover (short)	9	9	15	9
35	E2691	,, ,, ,, (long)	3	3	—	3

WHEN IN DOUBT SEND SAMPLE

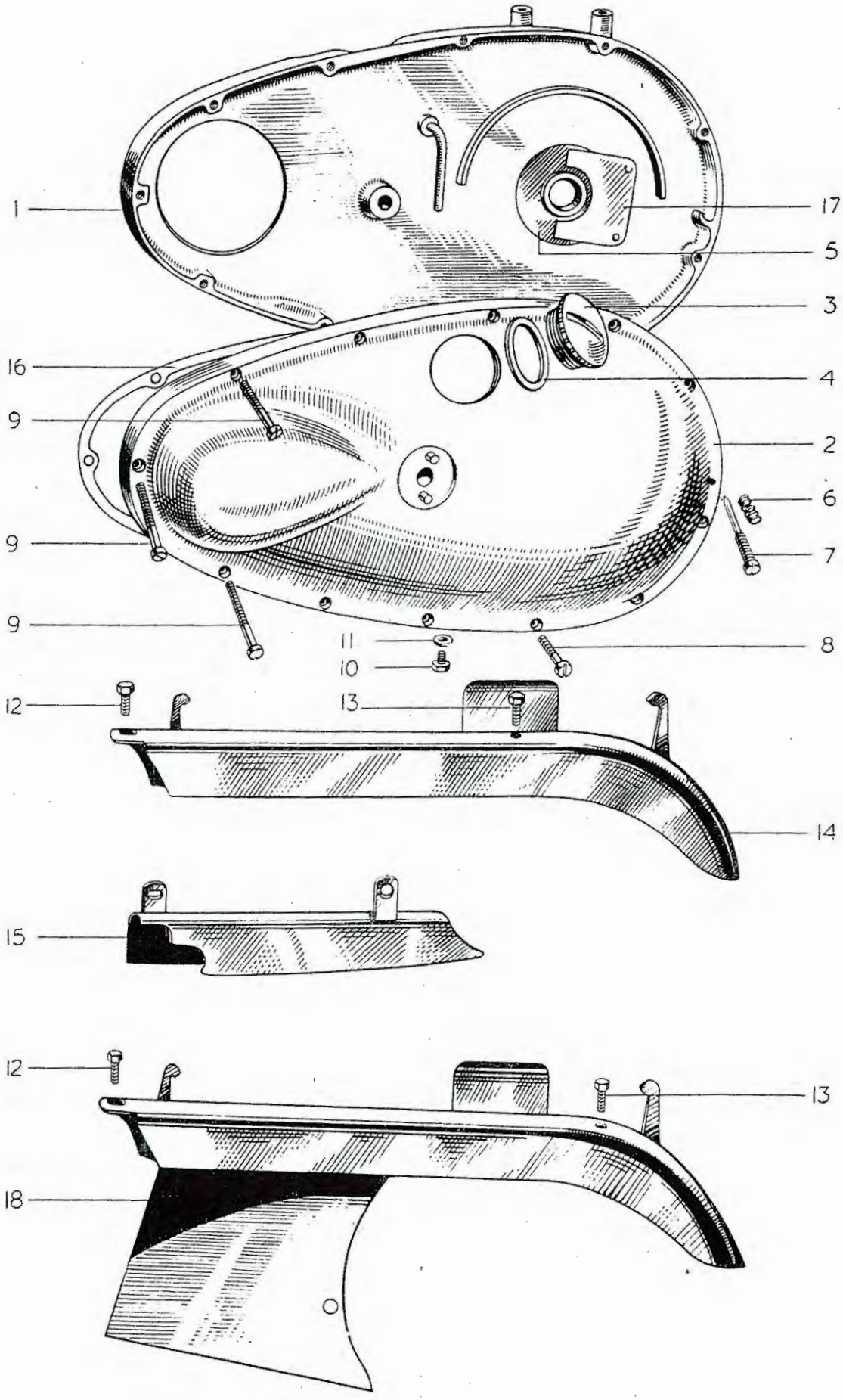

PRIMARY CHAINCASE AND REAR CHAINGUARDS

CHAINGUARD GROUP

REF. No.	PART No.	DESCRIPTION	5T	6T	TR5	T100
1	T766	Chainguard, rear upper	1	1	—	1
2	T891	Chainguard, rear assembly (rigid wheel) ...	—	—	1	—
3	T891A	,, ,, ,, (spring wheel) ...	—	—	1	—
4	F3174	Distance piece, chainguard to frame	—	—	1	—
5	DS57	Bolt, chainguard rear upper	1	1	1	1
6	S23-37	,, ,, front upper	1	1	1	1
7	S25-1	Washer, ,, bolt front and rear	2	2	2	2
8	F2615	Bolt, ,, to frame inner	—	—	1	—
9	E2288	Washer, ,, ,, ,, bolt	—	—	1	—
10	W630	Nut, ,, ,, ,, ...	—	—	1	—
11	F1730	Chainguard, rear lower	1	1	—	1
12	F1369	Bolt, chainguard lower front	1	1	—	1
13	F879	Nut, ,, ,, ,, bolt	1	1	—	1
14	S26-2	Washer, ,, ,, ,, ,, ...	1	1	—	1
15	F1760	Bolt, ,, ,, rear	1	1	—	1
16	S1-52	Nut, ,, ,, ,, bolt	1	1	—	1
17	*E1796	Bolt, distance piece to pillion footrest lug ...	—	—	1	—
18	*S25-2	Washer, ,, ,, ,, ,, ,, ,, ...	—	—	1	—

**Not required when pillion footrests are fitted*

CHAINGUARD

INDEX TO ILLUSTRATION ON PAGE 68

Illust. No.	Part No.	Page No.	Ref. No.	Illust. No.	Part No.	Page No.	Ref. No.
1	T.1030	67	20	10	PCE.102F	67	24
	T.1029	67	21	11	WE.170	67	25
2	T.478A	67	19	12	S.23-37	69	6
	T.480A	67	18	13	DS.57	69	5
3	NT.367	67	22	14	T.766	69	1
4	NT.376	67	23	15	F.1730	69	11
5	T.1031	67	27	16	T.503	67	33
6	T.497	67	31		T.504	67	32
7	T.496	67	30	17	T.91	67	28
8	E.427	67	34	18	T.891	69	2
9	E.2691	67	38		T.891A	69	3

FOR IDENTIFICATION OF PARTS SEE PAGE 6

CHAIN GROUP

REF. No.	PART No.	DESCRIPTION	5T	6T	TR5	T100
1	T376	Chain, primary 74L × ½″ × .305″	—	—	—	—
2	D120	Chain, primary 78L × ½″ × .305″ (solo) ...	1	—	—	1
3	D121	Chain, primary 77L × ½″ × .305″ (sidecar) ...	1	—	—	1
4	D40	Chain, primary 80L × ½″ × .305″ (solo) ...	—	1	—	—
5	D120	Chain, primary 78L × ½″ × .305″ (sidecar) ...	—	1	—	—
6	D244	Chain, primary 76L × ½″ × .305″	—	—	1	—
7	D69	Chain, rear 90L × ⅝″ × ⅜″	—	—	1	—
8	D8	,, ,, 92L × ⅝″ × ⅜″	1	1	—	1
9	110-046/49	Kit, primary chain spare parts	1	1	1	1
10	100-056/59	,, rear ,, ,, ,, ...	1	1	1	1

TANK GROUP

PETROL TANK

11	F3280PR	Tank, petrol	1	—	—	—
12	F3280TM	,, ,, ...	—	1	—	—
13	F3185	,, ,, ...	—	—	1	—
14	F3280PS	,, ,, ...	—	—	—	1
15	F3220	Cap, petrol tank filler	1	1	1	1
16	F3281	Band, ,, ,, styling L/H	1	1	—	1
17	F3282	,, ,, ,, ,, R/H	1	1	—	1
18	F1823C	Nameplate, petrol tank	—	—	—	—
19	F1823A	,, ,, ,, ...	2	—	—	—
20	F1823H	,, ,, ,, ...	—	2	—	—
21	F1823F	,, ,, ,, ...	—	—	2	2
22	F3113	Screw, nameplate	4	4	—	4
23	F1915	,, ,, ...	—	—	4	—
24	F1717	Tap, petrol feed	1	—	—	—
25	F3057	,, ,, ,, (R/H 6T and L/H T100) ...	—	1	2	1
26	F3116	,, ,, ,, (R/H)	—	—	—	1
27	F1511	Washer, petrol tap	1	1	2	2
28	F3329	Plug, petrol tank	1	1	—	—
29	F1511	Washer, petrol tank plug	1	1	—	—
30	F3341	Pipe, petrol feed	1	—	—	—
31	F3332	,, ,, ,, ...	—	1	—	—
32	F3343	,, ,, ,, L/H	—	—	1	1
33	F3349	,, ,, ,, R/H	—	—	1	1

TREASURY NOTES MUST BE REGISTERED

REF. No.	PART No.	DESCRIPTION	5T	6T	TR5	T100
1	F2958	Adaptor, carburetter to petrol pipe	—	—	1	1
2	GS367	Washer, adaptor to carburetter	—	—	1	1
3	F2959	Sleeve nut, adaptor	—	—	1	1
4	F2570	Washer, sleeve nut	—	—	1	1
5	F25S1	Pad, knee grip L/H	1	1	—	1
6	F2552	,, ,, ,, R/H	1	1	—	1
7	F1953	Screw, knee grip pad	4	4	—	4
8	F1808	Bolt, petrol tank fixing (front)	2	2	—	2
9	F966	,, ,, ,, ,, (rear)	2	2	2	2
10	F3007	Bolt, petrol tank to frame (front)	—	—	1	—
11	S1-51	Nut, ,, ,, ,, ,, bolt	—	—	1	—
12	E2287	Washer, ,, ,, ,, ,, ,, ...	—	—	1	—
12a	S25-3	,, ,, ,, ,, ,, ,, (plain)	—	—	1	—
13	F3006	Pad, ,, ,, front rubber	—	—	2	—
14	F967	,, ,, ,, rubber	6	6	4	6
15	F1813	,, ,, front rubber	2	2	—	2
16	S25-27	Washer, petrol tank bolt plain	4	4	2	4
17	F3005	Distance tube, tank front	—	—	1	—
		TANK PARCEL GRID				
18	F2933	Grid, tank parcel	1	1	1	1
19	F2936	Screw, tank parcel grid	4	4	4	4
20	*F3096	Plug, petrol tank grid	4	4	4	4
		*To replace F2936 when grid is not in use				
		OIL TANK				
21	F3321	Tank, oil	1	1	—	1
22	F3186	,, ,, ...	—	—	1	—
23	F3216	Cap, oil tank filler	1	1	1	1
24	E1792	Plug, ,, ,, drain	1	1	1	1
25	PT104B	Washer, oil tank drain plug	1	1	1	1
26	F3077	Connection, oil tank vent (rubber)	2	2	2	2
27	T1028	Pipe, ,, ,, ,, (steel)	1	1	—	1
28	T1027	,, ,, ,, ,, ,, ...	—	—	1	—
29	F929	Bolt, ,, ,, to bridge clip	1	1	—	1
30	H604	,, ,, ,, ,, ,, ,, ...	—	—	1	—
31	F3207	Distance piece, bridge clip bolt	—	—	1	—
32	F2398	Bolt, oil tank to seat tube clip	—	—	1	—
33	F2596	,, ,, ,, ,, ,, ,, ...	—	—	—	1
34	F1335	Distance piece, seat tube bolt	1	1	—	1
35	F3323	,, ,, ,, ,, ,, ...	—	—	1	—
36	F2597	,, ,, ,, ,, ,, ...	—	—	—	1
37	F1682	Stud, oil tank to seat tube	1	1	—	1
38	S1-51	Nut, ,, ,, ,, ,, stud	1	1	1	1
40	S26-3	Washer, bolt to seat tube clip	—	—	—	1
41	D57	Bolt, tank to mudguard	1	1	—	1
42	F879	Nut, ,, ,, ,, ...	1	1	—	1

PLEASE STATE COLOUR WHEN ORDERING

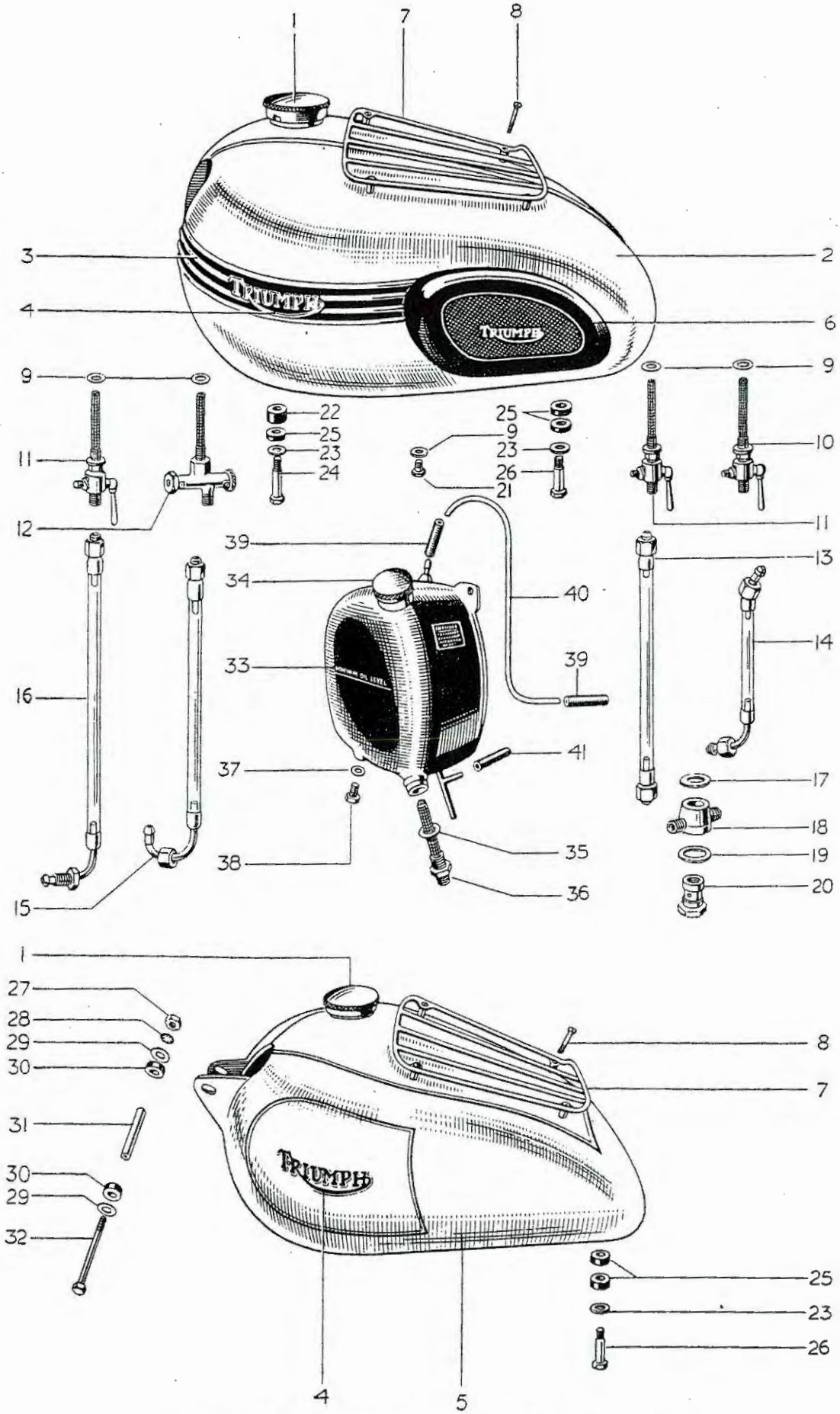

PETROL AND OIL TANKS WITH FITTINGS

REF. No.	PART No.	DESCRIPTION	5T	6T	TR5	T100
1	E1612	Washer, tank to mudguard	1	1	—	1
2	F3179	Filter, oil tank	1	1	1	1
3	F1713	Washer, oil tank filter	1	1	1	1
4	F3189	Pipe, top half oil feed	1	1	—	1
5	F3197	,, ,, ,, ,, ,, ...	—	—	1	—
6	F3182	Union nut, feed pipe	1	1	1	1
8	E1526	Pipes and block, oil tank to engine	1	1	—	1
9	E2799	,, ,, ...	—	—	1	—
10	E1529	Washer, oil pipe block joint	1	1	1	1
11	S1-51	Nut, oil pipe block securing	1	1	1	1
12	S25-3	Washer, oil pipe block securing nut	1	1	1	1
13	MF119	Connection, oil pipe rubber	2	2	1	2
14	MF119A	,, ,, ,, ,, (feed)	—	—	1	—

PETROL AND OIL TANKS

INDEX TO ILLUSTRATION ON PAGE 72

Illust. No.	Part No.	Page No.	Ref. No.	Illust. No.	Part No.	Page No.	Ref. No.
1	F.3220	70	15	20	F.2959	71	3
2	F.3280PR	70	11	21	F.3329	70	28
	F.3280TM	70	12	22	F.1813	71	15
	F.3280PS	70	14	23	S.25-27	71	16
3	F.3281(L/H)	70	6	24	F.1808	71	8
	F.3282(R/H)	70	17	25	F.967	71	14
4	F.1823A	70	19	26	F.966	71	9
	F.1823H	70	20	27	S.1-51	71	11
	F.1823F	70	21	28	E.2287	71	12
5	F.3185	70	13	29	S.25-3	71	12a
6	F.2551(L/H)	71	5	30	F.3006	71	13
	F.2552(R/H)	71	6	31	F.3005	71	17
7	F.2933	71	18	32	F.3007	71	10
8	F.2936	71	19	33	F.3321	71	21
9	F.1511	70	27		F.3186	71	22
10	F.3057	70	26	34	F.3216	71	23
11	F.3116	70	25	35	F.1713	73	3
12	F.1717	70	24	36	F.3179	73	2
13	F.3349	70	33	37	PT.104B	71	25
14	F.3343	70	32	38	F.1792	71	24
15	F.3341	70	30	39	F.3077	71	26
16	F.3332	70	31	40	T.1028	71	27
17	GS.367	71	2		T.1027	71	28
18	F.2958	71	1	41	E.1947	30	25
19	F.2570	71	4				

FOR IDENTIFICATION OF PARTS SEE PAGE 6

HANDLEBAR GROUP

REF. No.	PART No.	DESCRIPTION	5T	6T	TR5	T100
		HANDLEBAR				
1	H696	Handlebar, complete with all controls ...	1	1	—	—
2	H773	,, ,, ,, ,, ,, ...	—	—	—	1
3	H732	,, ,, ,, ,, ,, ...	—	—	1	—
4	H659	,, bend only	1	1	—	1
5	H440	,, ,, ,, ...	—	—	1	—
6	H230	Grip, handlebar L/H rubber	1	1	—	1
7	H230A	,, ,, ,, ,, ...	—	—	1	—
		FOR U.S.A. AND CANADIAN PATTERN SEE PAGE 78.				
		THROTTLE CONTROL				
8	H697	Twistgrip, assembly	1	1	—	1
9	H733	,, ,, ...	—	—	1	—
10	H230	Grip, twistgrip rubber	1	1	—	1
11	H230A	,, ,, ,, ...	—	—	1	—
12	H698	Head, assembly, twistgrip	1	1	—	1
13	H740	,, ,, ,, ...	—	—	1	—
14	H734	Head assembly, plain half	—	—	1	—
15	H734A	,, ,, threaded half	—	—	1	—
16	H744	Screw, head clamp	—	—	2	—
17	H685	Spring, twistgrip friction	1	1	1	1
18	H665	Screw, ,, ,, adjuster	1	1	1	1
19	H686	Spring, ,, ...	1	1	1	1
20	H234	Thimble, ,, cable	1	1	—	1
21	H237	Grubscrew, twistgrip	1	1	1	1
22	H700	Sleeve assembly, twistgrip	1	1	—	1
23	H735	,, ,, ,, ...	—	—	1	—
24	H233	Plate, sleeve retaining	1	1	—	1
25	H232	Circlip, ,, ,, ...	1	1	—	1
26	H748	Stop screw, twistgrip	—	—	1	—
27	H691	Nut, stop screw	—	—	1	—
28	H738	Pulley, head cable	—	—	1	—
29	H739	Pin, cable pulley	—	—	1	—
		THROTTLE CONTROL (AMAL PATTERN)				
30	16/117CE	Twistgrip, assembly	—	—	1	—
31	16/070	Grip, twistgrip rubber	—	—	1	—
32	16/069CE	Grip, dummy rubber (L/H)	—	—	1	—
		FRONT BRAKE CONTROL				
33	18/599	Lever assembly, front brake (1″ Handlebar) ...	1	1	—	1
34	18/556	,, ,, ,, ,, (⅞″ ,,) ...	—	—	1	—
35	18/535	Lever only	1	1	—	1
36	18/528	,, ,, ...	—	—	1	—
37	18/500	Bracket, lever fulcrum	1	1	—	1

DO NOT FORGET TO SIGN YOUR ORDER

REF. No.	PART No.	DESCRIPTION	5T	6T	TR5	T100
1	18/234	Bracket, lever fulcrum	—	—	1	—
2	18/598	Clamp, lever bracket	1	1	—	1
3	12/040	,, ,, ,, ...	—	—	1	—
4	61/004	Screw, ,, ,, to clamp	2	2	—	2
5	11/014	,, ,, ,, ,, ,, ...	—	—	2	—
6	18/087	,, ,, fulcrum pin	1	1	1	1
7	18/053	Nut, ,, ,, ,, screw	1	1	1	1
		CLUTCH CONTROL				
8	18/546	Lever assembly, front brake (1" Handlebar) ...	1	1	—	1
9	18/557	,, ,, ,, ,, (⅞" ,,) ...	—	—	1	—
10	18/535	Lever only	1	1	—	1
11	18/528	,, ,, ...	—	—	1	—
12	18/174	Bracket, lever fulcrum	1	1	—	1
13	18/234	,, ,, ,, ...	—	—	1	—
14	12/044	Clamp, ,, bracket	1	1	—	1
15	12/040	,, ,, ,, ...	—	—	1	—
16	11/014	Screw, ,, ,, to clamp	2	2	2	2
17	18/087	,, ,, fulcrum pin	1	1	1	1
18	18/053	Nut, ,, ,, ,, screw	1	1	1	1
		AIR CONTROL				
19	12/171	Lever assembly air control	1	1	—	1
20	12/161C	,, ,, ,, ,, (chrome)	—	—	1	—
21	12/107B	Lever only	1	1	—	1
22	12/016	,, ,, ...	—	—	1	—
23	12/029	Bolt, centre	1	1	1	1
24	12/031	Cap	1	1	1	1
25	12/033	Washer, centre spring	1	1	1	1
26	11/014	Screw, clip fixing	2	2	2	2
27	12/040	Clip, fixing	1	1	1	1
		MAGNETO CONTROL				
28	12/160	Lever assembly, magneto control	—	—	1	—
29	12/162	,, ,, ,, ,, ...	—	—	—	1
30	12/014	Lever only	—	—	1	1
31	12/029	Bolt, centre	—	—	1	1
32	12/031	Cap centre	—	—	1	1
33	12/033	Washer, spring	—	—	1	1
34	11/014	Screw, clip fixing	—	—	2	2
35	12/040	Clip, fixing	—	—	1	—
36	12/044	,, ,, ...	—	—	—	1

ALWAYS QUOTE PART NUMBER

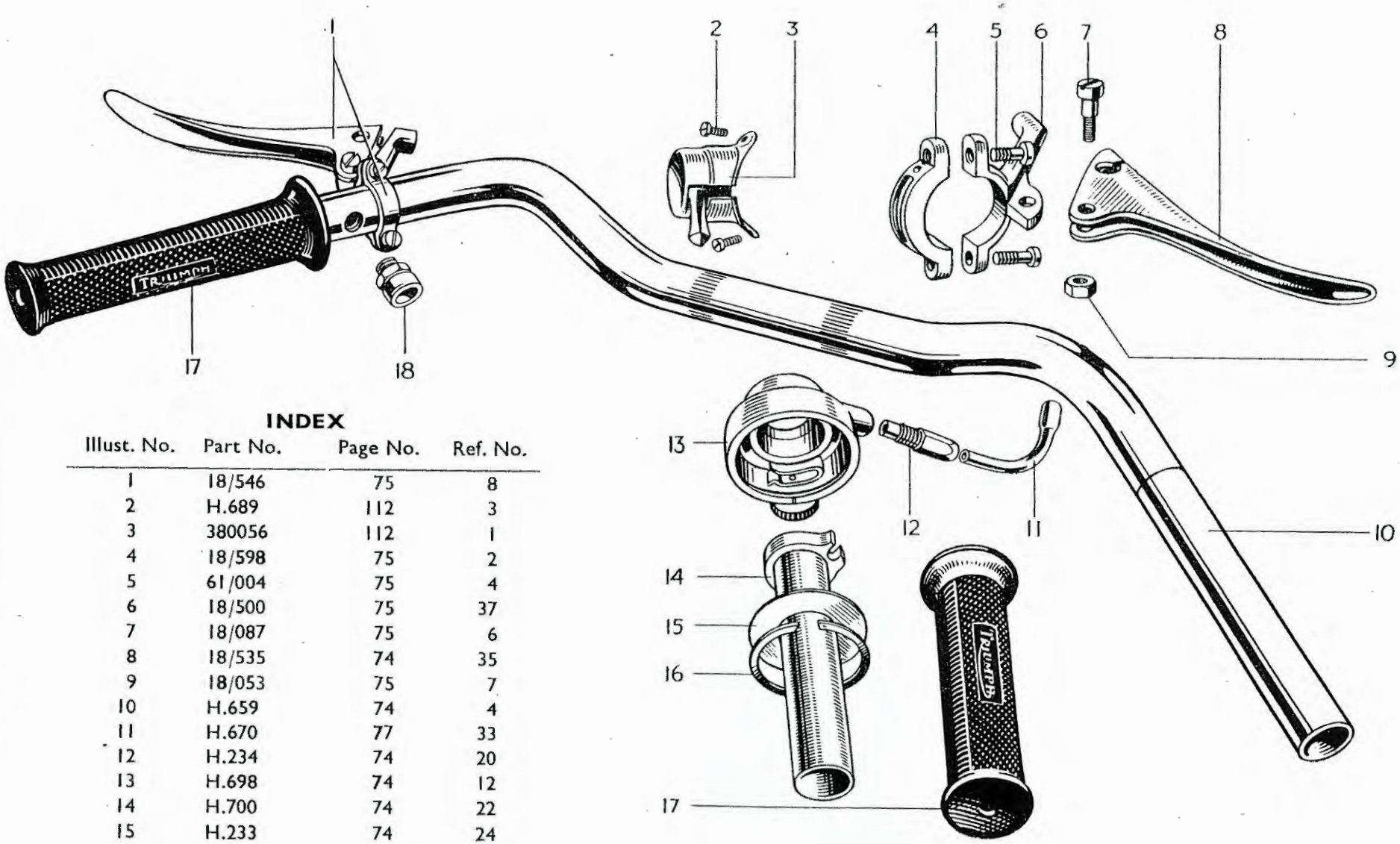

INDEX

Illust. No.	Part No.	Page No.	Ref. No.
1	18/546	75	8
2	H.689	112	3
3	380056	112	1
4	18/598	75	2
5	61/004	75	4
6	18/500	75	37
7	18/087	75	6
8	18/535	74	35
9	18/053	75	7
10	H.659	74	4
11	H.670	77	33
12	H.234	74	20
13	H.698	74	12
14	H.700	74	22
15	H.233	74	24
16	H.232	74	25
17	H.230	74	10
18	76200A	112	4

CONTROL CABLE GROUP

FOR U.S.A. AND CANADIAN PATTERN SEE PAGE 78.

REF. No.	PART. No.	DESCRIPTION	5T	6T	TR5	T100
		CLUTCH CABLE				
1	D203X	Cable assembly, clutch	1	1	1	1
2	D203W	Wire only, clutch	1	1	1	1
3	D203C	Casing only, clutch	1	1	1	1
4	D103	Ferrule, clutch casing	2	2	2	2
5	D81	Nipple, wire (handlebar end)	1	1	1	1
6	DS73	,, ,, (gearbox end)	1	1	1	1
7	DS74	Adjuster, clutch cable	1	1	1	1
8	W76	Locknut, ,, ,, adjuster	1	1	1	1
		FRONT BRAKE CABLE				
9	D247	Cable assembly, brake	1	1	—	1
10	D259	,, ,, ,, ...	—	—	1	—
11	D247W	Wire only, brake	1	1	—	1
12	D259W	Wire only, brake	—	—	1	—
13	D247C	Casing only, brake	1	1	—	1
14	D259C	,, ,, ,, ...	—	—	1	—
15	D103	Ferrule, brake casing	2	2	2	2
16	H751	,, ,, ,, rubber	1	1	—	1
17	H707	Sleeve, ,, ,, ,, ...	1	1	—	1
18	D81	Nipple, wire	1	1	1	1
19.	W593	Fork end, wire	1	1	1	1
20	H446B	Tube, ,, lower cover	1	1	—	1
21	H446A	,, ,, ,, ,, ...	—	—	1	—
22	H447	Ferrule, cover tube	1	1	1	1
23	W328A	Adjuster, brake cable	1	1	1	1
24	W591	Abutment	1	1	1	1
25	W329	Thumb nut, brake cable adjuster	1	1	1	1
		THROTTLE CABLE				
26	D224	Cable assembly, throttle	1	—	—	1
27	D269	,, ,, ,, ...	—	1	—	—
28	D233	,, ,, ,, ...	—	—	1	—
29	D224W	Wire only, throttle	1	—	—	1
30	D269W	,, ,, ,, ...	—	1	—	—
31	D233W	,, ,, ,, ...	—	—	1	—
32	D224C	Casing only, throttle	1	—	—	1
33	D269C	,, ,, ,, ...	—	1	—	—
34	D233C	,, ,, ,, ...	—	—	1	—
33	H670	Guide tube, ,, wire	1	1	1	1
56	D101	Ferrule, throttle casing	3	3	3	3

SEE SPECIMEN ORDER IN PREFACE

REF. No.	PART No.	DESCRIPTION	5T	6T	TR5	T100
1	D83	Nipple, ,, wire (Handlebar end) ...	1	1	—	1
2	D232	,, ,, ,, (,, ,,) ...	—	—	1	—
3	NS191	,, ,, ,, (carburetter end) ...	1	1	1	1
4	D104	Adjuster, throttle casing	1	—	1	1
5	D267	,, ,, ,, ...	—	1	—	—
6	D268	Nut, ,, ,, adjuster	—	2	—	—
7	D271	Spring, ,, lever return	—	1	—	—
		AIR CABLE				
8	D225	Cable, assembly, air	1	1	—	1
9	D242	,, ,, ,, ...	—	—	1	—
10	D225W	Wire only, air	1	1	—	1
11	D242W	,, ,, ,, ...	—	—	1	—
12	D225C	Casing only, air	1	1	—	1
13	D242C	,, ,, ,, ...	—	—	1	—
14	D101	Ferrule, air casing	2	2	2	2
15	D83	Nipple, air wire (Handlebar end)	1	1	1	1
16	NS191	,, ,, ,, (carburetter end)	1	1	1	1
		IGNITION CABLE				
17	D100	*Cable assembly, ignition	—	—	1	1
18	D100W	Wire only, ignition	—	—	1	1
19	D100C	Casing only, ignition	—	—	1	1
20	D101	Ferrule, ignition casing	—	—	2	2
21	D83	Nipple, ignition wire (Handlebar end) ...	—	—	1	1

*Magneto end fitting supplied by Magneto Manufacturers.

HANDLEBAR GROUP

U.S.A. AND CANADIAN PATTERN

22	H786	Handlebar, complete with all controls ...	1	—	—	—
23	H808	,, ,, ,, ,, ,, ...	—	1	—	—
24	H798	,, ,, ,, ,, ,, ...	—	—	—	1
25	H787	,, bend only	1	1	—	1
26	D255	Cable assembly, clutch	1	1	—	1
27	D255W	Wire only, clutch	1	1	—	1
28	D255C	Casing only, clutch	1	1	—	1
29	D256	Cable assembly, brake	1	1	—	1
30	D256W	Wire only, brake	1	1	—	1
31	D256C	Casing only, brake	1	1	—	1
32	D257	Cable assembly, throttle	1	—	—	1
33	D272	,, ,, ,, ...	—	1	—	—
34	D257W	Wire only, throttle	1	—	—	1
35	D272W	,, ,, ,, ...	—	1	—	—

DO NOT FORGET TO SIGN YOUR ORDER

REF. No.	PART No.	DESCRIPTION	5T	6T	TR5	T100
1	D257C	Casing only, throttle	1	—	—	1
2	D272C	,, ,, ,, ...	—	1	—	—
3	D260	Cable assembly, ignition	1	1	—	1
4	D260W	Wire only, ignition	1	1	—	1
5	D260C	Casing only, ignition	1	1	—	1

Other details as standard specification

REAR BRAKE CONTROL GROUP

6	F3313	Pedal, rear brake	1	1	1	1
7	F995	Rubber, ,, ,, pedal	1	1	1	1
8	F1149	Screw, ,, ,, ,, stop	1	1	1	1
9	F879	Nut, ,, ,, ,, ,, ...	1	1	1	1
10	F867	Spindle, ,, ,, ,, ,, ...	1	1	1	1
11	DS48	Nut, rear brake spindle to frame	1	1	1	1
12	SCZ45	Washer, rear brake spindle to frame	1	1	1	1
13	S1-52	Nut, ,, ,, pedal end	1	1	1	1
14	S25-2	Washer, ,, ,, ,, ,, (plain)	1	1	1	1
15	S26-16	,, ,, ,, ,, ,, (spring) ...	1	1	1	1
16	F1015	Rod, brake operating	—	—	1	—
17	F1015A	,, ,, ,, ...	1	1	—	1
18	F1015C	,, ,, ,, (spring wheel)	—	—	1	—
19	F1015B	,, ,, ,, (,, ,,)	1	1	—	1
20	WF32	Pin, brake operating rod fork end	1	1	1	1
		$\frac{1}{16}'' \times \frac{1}{2}''$ Split pin, fork end pin	1	1	1	1
21	W11	Pivot roller, brake arm to rod	1	1	1	1
22	NS372	Thumb nut, brake rod adjusting	1	1	—	1
23	F2896	,, ,, ,, ,, ,, ...	—	—	1	—

FOOTREST GROUP

24	F1731	Footrest R/H	1	1	1	1
25	F987	,, L/H	1	1	1	—
26	F987A	,, ,, ...	—	—	—	1
27	NF704	Rubber, footrest	2	2	—	2
28	F1695	,, ,, ...	—	—	2	—
29	F1736	Tube, footrest support R/H	1	1	1	1
30	F991	Rod, ,, ...	1	1	1	1
31	DS48	Nut, ,, rod	2	2	2	2
32	S25-8	Washer, ,, ,, R/H plain	1	1	1	1
33	F862	Distance tube, engine plate	1	1	1	1
34	T87	Distance tube, L/H footrest	1	1	1	1

PLEASE STATE COLOUR WHEN ORDERING

REF. No.	PART No.	DESCRIPTION	5T	6T	TR5	T100
		PILLION FOOTREST				
1	F2312	Footrest assembly, pillion	2	2	2	2
2	F1694	Pedal, footrest	2	2	2	2
3	F1695	Rubber, ,, pedal	2	2	2	2
4	F2271	Bolt, ,, ,, pivot	2	2	2	2
5	S1-51	Nut, ,, ,, ,, bolt	2	2	2	2
6	F2277	Washer, ,, ,, ,, ,, ...	2	2	2	2
7	F2268	Hanger, footrest pedal L/H	2	2	2	2
8	F1696	Stud, ,, ,, hanger	2	2	2	2
9	PO172A	Nut, ,, ,, ,, stud	2	2	2	2
10	S26-1	Washer, ,, ,, ,, ,, ...	2	2	2	2
		SADDLE GROUP				
		TERRY				
11	F1729T	Saddle, complete	1	1	—	—
12	F1729A	Cover, saddle seat	1	1	—	—
13	F2835	Spring, saddle main	2	2	—	—
14	F1729K	Spring, saddle seat, 1⅝″	7	7	—	—
15	F1729H	Spring, saddle seat, 7″	2	2	—	—
16	F1729G	Spring, saddle seat, 7½″	2	2	—	—
17	F1729F	Spring, saddle seat, 7¾″	9	9	—	—
18	F847	Stud, saddle spring to frame	2	2	—	—
19	W76	Nut, saddle spring to frame	8	8	—	—
20	S25-2	Washer, saddle spring to frame	6	6	—	—
21	NA64J	Bolt and nut, saddle nose	1	1	—	—
		LYCETT				
22	F1729T	Saddle, complete	1	1	—	—
23	F1729B	Cover, saddle seat	1	1	—	—
24	F2835	Spring, saddle main	2	2	—	—
25	F1729N	Spring, saddle seat, 2¼″	7	7	—	—
26	F1729P	,, ,, ,, 7⅛″	4	4	—	—
27	F1729Q	,, ,, ,, 7½″	11	11	—	—
28	F847	Stud, saddle spring to frame	2	2	—	—
29	W76	Nut, ,, ,, ,, ,, ...	8	8	—	—
30	S25-2	Washer, ,, ,, ,, ,, ...	6	6	—	—
31	NA64J	Bolt and nut, saddle nose	1	1	—	—
32	F2992	Saddle, complete	—	—	1	—
33	F2992A	Cover, saddle seat	—	—	1	—
34	F2992B	Spring, saddle main	—	—	2	—
35	F2992C	Elastic, saddle seat, 11½″	—	—	2	—
36	F2992D	Elastic, ,, ,, 13⅜″	—	—	3	—
37	F3305	Bracket, saddle to seat lug	—	—	1	—
38	F3065	Distance tube, bracket	—	—	1	—
49	E2593	Bolt, bracket upper	—	—	1	—

ALWAYS QUOTE PART NUMBERS

REF. No.	PART No.	DESCRIPTION	5T	6T	TR5	T100
1	S1-51	Nut, bracket upper bolt	—	—	1	—
2	E2287	Washer, bracket upper bolt	—	—	1	—
3	F929	Bolt, bracket lower	—	—	1	—
4	E2287	Washer, bracket lower bolt	—	—	1	—
5	F3032	Extension piece, saddle plain	—	—	1	—
6	F3031	Extension piece, saddle tapped	—	—	1	—
7	F1369	Bolt, extension to saddle	—	—	4	—
8	F879	Nut, ,, ,, ,, bolt	—	—	4	—
9	F2720	Stud, saddle spring to frame	—	—	2	—
10	W76	Nut, ,, ,, ,, ,, ...	—	—	6	—
11	W630	,, ,, ,, ,, ,, (under spring) ...	—	—	2	—
12	S25-2	Washer, saddle spring to frame	—	—	6	—

PILLION SEAT GROUP

13	NF761	Pillion seat complete	1	1	1	—
14	F2660	Backing plate, pillion seat	—	—	1	—
15	S23-42	Bolt, pillion seat fixing	4	4	4	—
16	S4-9	Nut, ,, ,, bolt	4	4	4	—
17	S25-1	Washer, ,, ,, ,, ...	4	4	4	—

PROP STAND GROUP

18	F3095	Prop stand, complete	1	1	—	1
19	F3094	,, ,, ,, ...	—	—	1	—
20	F2607	Pin, swivel	—	—	—	—
21	F3097	,, ,, ...	1	1	1	1
22	F2610	Spring, tension	1	1	1	1
23	F3096	Lock washer, swivel pin	1	1	1	1

SIDECAR ATTACHMENTS GROUP

24	F2587	Lug, bottom front connection	1	1	—	1
25	F1746	Nut, ,, ,, ,, sleeve	2	2	—	2
26	F2600	Bolt, ,, ,, ,, ...	1	1	—	1
27	F1747	Nut, ,, ,, ,, bolt	1	1	—	1
28	F2601	Lug, rear connection	1	1	—	1
29	F1743	Stud, rear connection	2	2	—	2
30	S1-5	Nut, ,, ,, stud	2	2	—	2
31	KF365	Washer, rear connection stud	2	2	—	2

4th point connections and saddle tube eye bolts are obtainable from sidecar manufacturers.

ALWAYS QUOTE PART NUMBER

REAR CARRIER GROUP

REF. No.	PART No.	DESCRIPTION	5T	6T	TR5	T100
1	F2278CTE	Carrier, complete with fittings	1	1	—	1
2	F2856	Bridge, carrier	2	2	—	2
3	F2857	Plate, ,, backing	2	2	—	2
4	DS57	Bolt, ,, ...	8	8	—	8
5	E1612	Washer, ,, ...	8	8	—	8
6	F879	Nut, ,, ...	8	8	—	8

TWINSEAT GROUP

7	F3153	Twinseat, complete with all attachments ...	1	1	—	1
8	F3122	Bracket, centre	1	1	—	1
9	F879	Nut, ,, bracket	2	2	—	2
10	E1612	Washer, ,, ,, ...	2	2	—	2
11	F1760	Bolt, ,, ,, to seat lug	2	2	—	2
12	W76	Nut, ,, ,, ,, ,, ,, ...	2	2	—	2
13	S25-2	Washer, ,, ,, ,, ,, ,, ...	2	2	—	2
14	E2593	Bolt, nose bracket	1	1	—	1
15	S1-51	Nut, ,, ,, ...	1	1	—	1
16	E2287	Washer, nose bracket	1	1	—	1
17	DS58	Bolt, rear ,, to mudguard	2	2	—	2
18	S1-51	Nut, ,, ,, ,, ,, ...	2	2	—	2
19	S25-3	Washer, rear bracket to mudguard (plain) ...	4	4	—	4
20	E2287	Washer, ,, ,, ,, ,, (serrated)	2	2	—	2

TOOLBOX GROUP

21	F1692A	Toolbox, complete with fastener	1	1	1	1
22	F3224/7	Fastener assembly	1	1	1	1
23	F1700	Clip, toolbox to backstay	1	1	2	1
24	DS57	Bolt, ,, ,, ,, clip	1	1	2	1
25	F879	Nut, ,, ,, ,, ,, ...	1	1	2	1
26	S26-2	Washer, ,, ,, ,, ,, ...	1	1	2	1
27	F1699	Clip, ,, ,, bottom tube	1	1	—	—
29	DS57	Bolt, ,, ,, ,, ,, clip	1	1	—	—
30	F879	Nut, ,, ,, ,, ,, ,, ...	1	1	—	—
31	S26-2	Washer, ,, ,, ,, ,, ,, ...	1	1	—	—
32	F3024	Clip, ,, ,, backstay (lower)	—	—	—	1
33	DS57	Bolt, ,, ,, ,, clip	—	—	—	1
34	F879	Nut, ,, ,, ,, ,, ...	—	—	—	1
35	S26-2	Washer, ,, ,, ,, ...	—	—	—	1
36	S1-51	Nut, ,, ,, ,, ,, bolt	—	—	—	1
37	S26-3	Washer, ,, ,, ,, ,, ,, ...	—	—	—	1

DO NOT FORGET TO SIGN YOUR ORDER

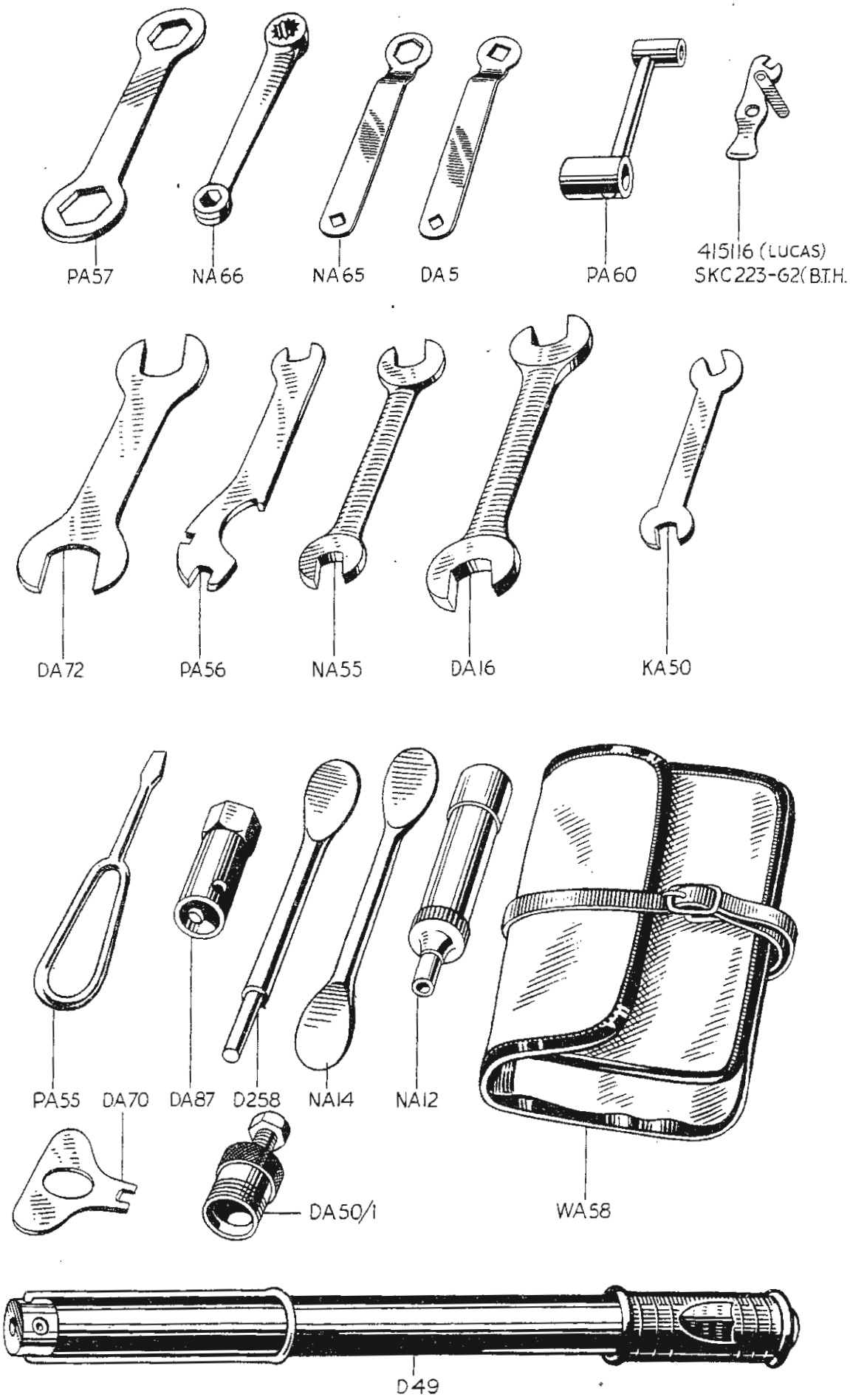
PA57
NA66
NA65
DA5
PA60
415116 (LUCAS)
SKC223-62(B.T.H.
DA72
PA56
NA55
DA16
KA50
PA55
DA70
DA87
D258
NA14
NA12
DA50/1
WA58
D49

TOOLKIT

TOOLKIT GROUP

REF. No.	PART No.	DESCRIPTION	5T	6T	TR5	T100
1	D209	Toolkit, complete	—	—	—	—
1	DA71	,, ,, ...	1	1	1	1
2	DA72	Spanner, open $\frac{1}{2}''$ × $\frac{9}{16}''$ whit.	1	1	1	1
3	KA50	,, ,, Spec. × $\frac{1}{8}''$ whit.	1	1	1	1
4	NA55	,, ,, $\frac{1}{4}''$ × $\frac{5}{16}''$ whit.	1	1	1	1
5	DA16	,, ,, $\frac{3}{8}''$ × $\frac{7}{16}''$ whit.	1	1	1	1
6	DA5	,, closed .218″ × .338″ square	1	1	1	1
7	NA65	,, ,, .218″ × $\frac{3}{16}''$ whit.	1	1	1	1
8	NA66	,, ,, $\frac{3}{16}''$ × $\frac{5}{16}''$ whit.	1	1	1	1
9	PA57	Spanner, closed $\frac{1}{2}''$ × $\frac{9}{16}''$ whit.	1	1	1	1
10	PA56	,, combination	1	1	1	1
11	PA60	,, box $\frac{1}{4}''$ × $\frac{5}{32}''$ whit.	1	1	1	1
12	D87	,, ,, sparking plug	1	1	1	1
13	D258	Tommy bar, sparking plug spanner	1	1	1	1
14	SKC1223-G2	Spanner, magneto contact (B.T.H.)	1	1	1	1
15	415116	,, ,, ,, (Lucas)	1	1	1	1
16	DA70	Key, clutch adjusting	1	1	1	1
17	DA50/1	Extractor, clutch centre	1	1	1	1
18	NA12	Gun, grease	1	1	1	1
19	NA14A	Lever, tyre	1	1	1	1
20	PA55	Screwdriver	1	1	1	1
21	WA58	Roll, canvas tool	1	1	1	1
22	D49	Inflator, tyre	1	1	1	1
23	D220	Spanner, fork cap nut (not included in toolkit)	1	1	1	1
24	167	Extractor, chain rivet (not included in toolkit)	1	1	1	1

AIR FILTER GROUP

25	F3315	Air filter assembly	1	1	—	1
26	F3195	,, ,, ,, ...	—	—	1	—
27	F3195E	Element only	1	1	—	1
28	F3223	Element with cover	—	—	1	—
29	F3376	Screw, cover $\frac{1}{4}''$ BSF × $\frac{3}{8}''$—CH.HD	1	1	—	1
30	E2312	Washer, cover screw ($\frac{1}{4}''$ shakeproof)	1	1	—	1
31	F3327	Grommet, air filter	1	—	—	1
32	F2875	Sleeve, carburetter to filter	1	—	1	1
33	F3316	Connection, sleeve to filter (rubber)	1	—	—	1
34	F3340	Connection, sleeve to filter (rubber)	—	1	—	—
35	F2872	,, ,, ,, ,, ,, ...	—	—	1	—
36	DS57	Bolt, air filter to mudguard	1	1	—	1
37	F879	Nut, ,, ,, ,, ,, ...	1	1	—	1
38	F1612	Washer, air filter to mudguard	1	1	—	1
39	F1682	Stud, ,, ,, ,, frame	—	—	1	—
40	S1-51	Nut, ,, ,, ,, ,, ...	—	—	1	—

ALL GOODS SENT TO WORKS MUST BE CARRIAGE PAID

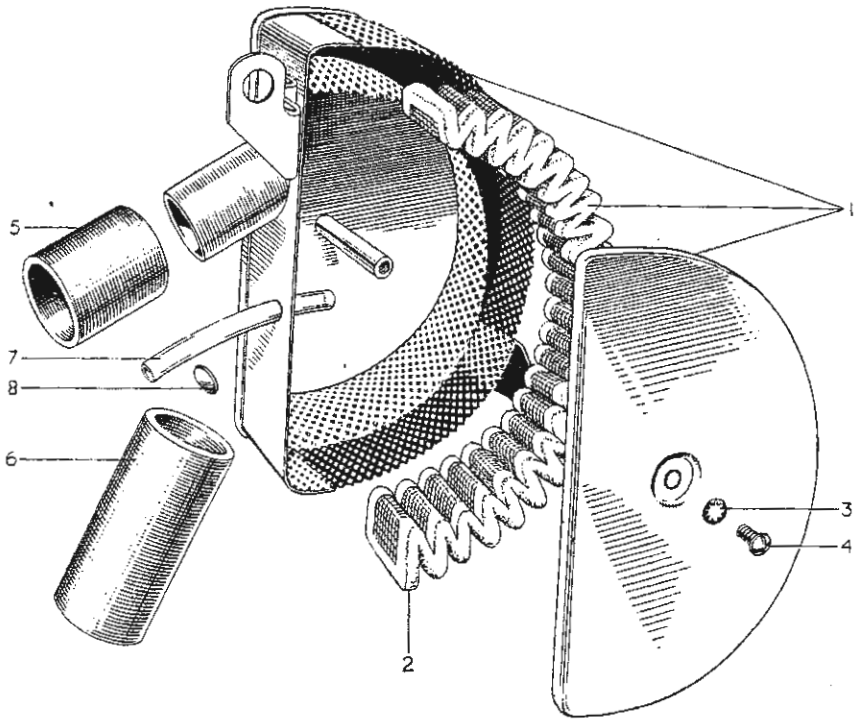

AIR FILTER
5T, 6T AND T100
INDEX

Illust. No.	Part No.	Page No.	Ref. No.
1	F.3315	84	25
2	F.3315E	84	27
3	E.2312	84	30
4	F.3376	84	29
5	F.3316	84	33
6	F.3340	84	34
7	F.3339	98	5
8	F.3327	84	31

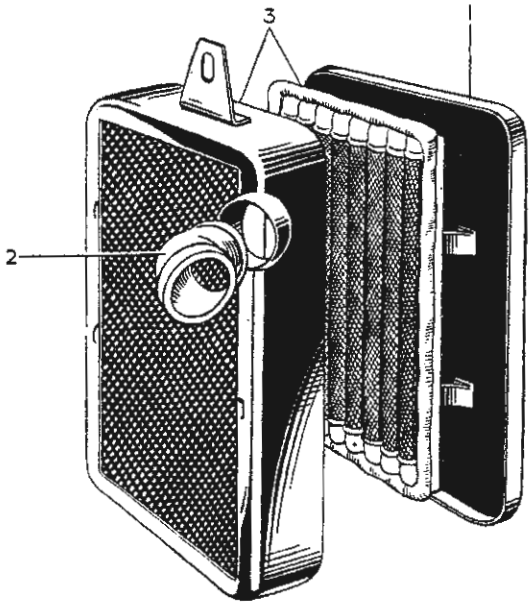

TR5
INDEX

Illust. No.	Part No.	Page No.	Ref. No.
1	F.3223	84	28
2	F.2872	84	35
3	F.3195	84	26

SPEEDOMETER GROUP

REF. No.	PART No.	DESCRIPTION	5T	6T	TR5	T100
1	S467/99/L	Speedometer head 120 M.P.H.	1	—	—	1
2	S467/107/L	,, ,, ,, ,, ...	—	1	—	—
3	S433/3/L	,, ,, ,, ,, ...	—	—	1	—
4	S467/23/L	Speedometer head 180 K.P.H.	1	—	—	1
5	S467/47/L	,, ,, ,, ,, ...	—	1	—	—
6	S433/7/L	,, ,, ,, ,, ...	—	—	1	—
7	DS40	Bracket, speedometer head	—	—	1	—
8	DS57	Bolt, bracket	—	—	2	—
9	S26-2	Washer, bracket	—	—	2	—
10	P53279/1	Bulb holder c/w bulb	1	1	1	1
11	P52305	Bulb only	1	1	1	1
12	P22469	Rubber ring, speedometer head	1	1	—	1
13	25578/2	Clamp-bar	1	1	—	1
14	N1253	Nut, clamp-bar	2	2	—	2
15	D245	Cable, speedometer drive (44″ long)	1	1	—	1
16	D245A	Cable, speedometer drive (44″ long)	—	—	1	—
17	F3098	Clip, speedometer cable	1	1	1	1
		SPEEDOMETER DRIVE AT GEARBOX				
18	T924	Pinion, standard ratio layshaft 10T	1	1	—	1
19	T973	,, wide ,, ,, 8T	—	—	1	—
20	T925	Peg, pinion to layshaft	1	1	1	1
21	T934	Gear, standard ratio driven 16T	1	1	—	1
22	T975	,, wide ,, ,, 15T	—	—	1	—
23	T825	Washer, gear thrust	1	1	1	1
24	T933	Bush, gear	1	1	1	1
25	T948	Oil seal gear	1	1	1	1

SPARKING PLUG GROUP

26	H14	Plug, sparking (Lodge)	2	2	—	—
27	L11S	,, ,, (Champion)	2	2	—	—
28	F80	,, ,, (K.L.G.)	2	2	—	—
29	HLN	,, ,, (Lodge)	—	—	2	2
30	NA10	,, ,, (Champion)	—	—	2	2
31	FE80	,, ,, (K.L.G.)	—	—	2	2
32	D262	Cover, sparking plug terminal	2	2	2	2

APPLY TO ACCESSORY MANUFACTURERS FOR SERVICE UNITS

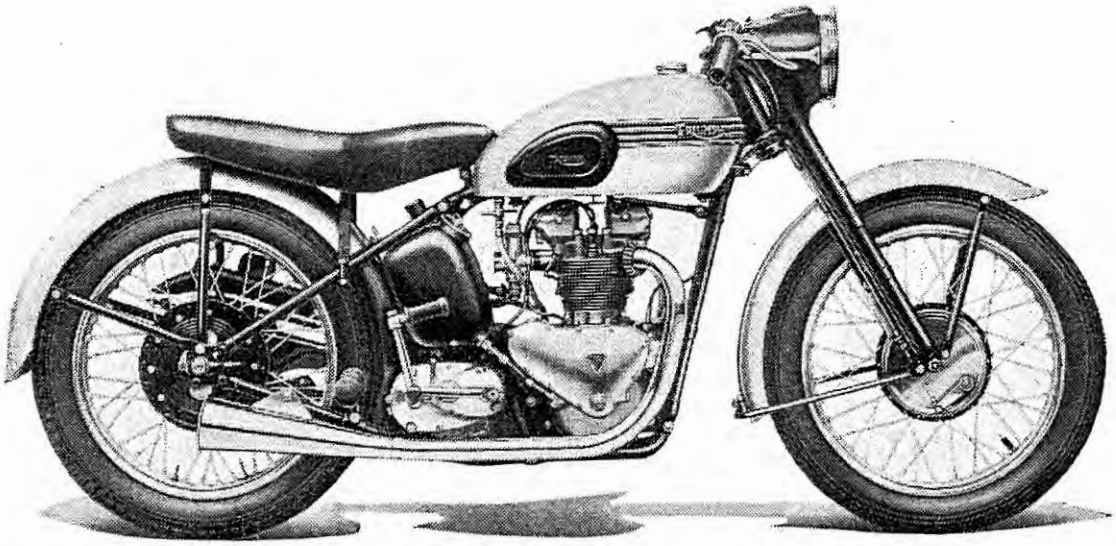

TIGER 100 RACING CONVERSION KIT

If purchased complete this Kit is supplied in a Container. When ordering the Kit, or Parts from it, owners of Tiger 100 Models must quote Engine and Frame Numbers. This kit can only be fitted to machines manufactured during and after the 1951 season (light alloy engines).

TECHNICAL INFORMATION

IGNITION FULLY ADVANCED

Low Octane Fuel ...	42°
50/50 Petrol-Benzole ...	42°
Alcohol ...	38°

VALVE TIMING	E2477/8 Camshafts	E3134 Camshafts
Inlet Opens BTC ...	52°	57°
Inlet Closes ABC ...	70°	79°
Exhaust Opens BBC ...	72°	79°
Exhaust Closes ATC ...	50°	50°

Tappet clearance must be 'nil' when engine valve timing is checked or re-timed. (See Booklet "TUNING THE T100" for further information. Obtainable from your Dealer or direct from the Triumph Works).

BASIC CARBURETTER SETTINGS

Petrol Fuel ...	Slide ...	6/4
	Needle Jet ...	109
	Main Jet ...	200
50/50 Petrol-Benzole ...	Slide ...	6/4
	Needle Jet ...	109
	Main Jet ...	220
Alcohol ...	Slide ...	6/4
	Needle Jet ...	113
	Main Jet ...	660
	Jet Block Pilot ...	.031"

COMPRESSION RATIOS

Low Octane Fuel (Pool Petrol) ...	8.0
High Octane Fuel (Petrol) ...	8.5
50/50 Petrol-Benzole Mixture ...	9.5
Alcohol Fuel ...	12.0
B.H.P. at R.P.M. (Low Octane) ...	42 at 7000
Weight—dry ...	330 lbs.

T100 RACING KIT GROUP

REF. No.	PART No.	DESCRIPTION	QUANTITY
1	CP100	Racing kit complete (CR 8.5:1)	1
2	CP101	,, ,, ,, (CR 9.5:1) alternative	1
		PISTONS	
3	*E2489	Piston, body 8.25:1	2
4	*E2884	,, ,, 9.5:1 alternative	2
5	E656	Ring, compression	2
6	E3048	,, ,, (taper)	2
7	GE29	,, scraper	2
8	WE203E	Pin, gudgeon	2
9	WE479	Circlip, gudgeon pin retaining	4
		* Standard T100 Pistons supplied against U.S.A. demands	
		CAMSHAFTS & TAPPETS	
10	E3134	Camshaft, inlet	2
11	E3059R	Tappet	4
		VALVE SPRINGS	
12	E3001	Spring, valve inner	4
13	E3002	,, ,, outer	4
		CYLINDER HEAD FITTINGS	
14	E3004	Stud, inlet flange to cylinder head	4
15	E2728	Washer, inlet flange to cylinder head stud	4
16	E3006	Flange, ,, ...	1
17	E3009	Sleeve, ,, ,, ...	2
18	E2674	Stud, ,, ,, to carburetter	4
19	E3007	Distance piece, inlet flange to carburetter R/H	1
20	E3008	,, ,, ,, ,, ,, ,, L/H	1
21	S1-51	Nut, carburetter to flange	4
22	S25-3	Washer, ,, ,, ,, ...	4
		EXHAUST SYSTEM	
23	E2974	Pipe, exhaust R/H	1
24	E2976	,, ,, L/H	1
25	E3023	Pipe, straight through extension R/H	1
26	E3024	,, ,,, ,, ,, L/H	1
27	E1270	Clip, straight pipe to cylinder head	2
28	E409	Bolt, ,, ,, clip	2
29	E410A	Washer, ,, ,, ,, bolt	2
30	E2734	Megaphone, R/H	1
31	E2735	,, L/H	1
32	E2271	Clip, megaphone to exhaust pipe	2
33	TE164E	Bolt for E2271 clip	2
34	TE164C	"D" nut for TE164E bolt	2
35	TE164D	"D" washer for TE164E bolt	2
36	F3191	Bolt, megaphone to frame	2
37	PO172A	Nut, ,, ,, ,, bolt	2
38	F3190	Distance piece for F3191 bolt	2
39	S25-1	Spring washer ,, ,, ,, ...	2

REF. No.	PART No.	DESCRIPTION	QUANTITY
		REV COUNTER AND TACHOMETER DRIVE	
1	RC126	Rev-Counter head	1
2	52091/5	Cable, tachometer drive	1
3	E3022	Gearbox, ,, ,, ...	1
4	E3050	Seal, ,, ,, ...	1
5	E2994	Pinion, ,, ,, ...	1
6	GS297	Nut, ,, ,, pinion	1
7	S25-13	Washer, ,, ,, ,, ...	1
8	E2995	Bolt, ,, ,, gearbox	1
9	E2996	Screw, ,, ,, ,, ...	1
10	E2997	Nut for E2996	1
11	E1612	Washer for E2996	1
		GASKET SET	
12	GST100R/51	Gasket Set	1
		Comprising of :—	
13	E1650	Gasket, rocker box	4
14	E2249	Washer, cylinder base	1
15	E1497	,, Push rod cover tube upper	2
16	E2425	,, ,, ,, lower	2
17	E1335	,, Rocker feed and drain	12
18	F1880	,, ,, drain	4
19	E1577	,, ,, box inspection cap	4
20	E2618	,, Distance piece and carburetter	2
21	E2967	,, Inlet flange to cylinder head	2
22	E1529	,, Oil junction block	1
23	E1537	,, Oil pump	1
24	E487	,, Crankcase filter	2
25	E3010	,, Tach-drive to crankcase	1
26	H430	,, ,, ,, gearbox bolt	1
		FOOTRESTS	
27	F3201	Footrest folding, complete	1
28	F3163	Pedal footrest	1
29	F3161	Swivel ,, pedal	1
30	F3162	Bolt, ,, ,, pivot	1
31	S1-51	Nut, ,, ,, ,, ...	1
32	PCW73A	Washer ,, ,, ,, ...	1
33	F3160	Arm, ,, ,, ...	1
34	F2645	Bolt N/S and O/S Footrests to frame	2
35	F880	Nut, O/S Footrest bolt	1
36	SCZ45	Washer, bolt spring	2
37	F3166	Rod (replacing footrest rod)	1
38	F3193	Distance piece, rod	2
		REAR BRAKE ROD AND ANCHORAGE PIN	
39	F1015E	Rod, rear brake operating	1
40	F2648	Pin, brake plate anchorage	1
41	W743	Nut, ,, ,, ,, pin	1
		$\frac{3}{32}''$ dia. × $\frac{1}{2}''$ split pin	1

ALWAYS QUOTE ENGINE NUMBER AND PREFIX

REF. No.	PART No.	DESCRIPTION	QUANTITY
		RACING FRONT NUMBER PLATE	
1	F3192	Plate, front number	1
2	H766	Bracket, front number plate	3
3	H687	Screw, ,, ,, ,, ...	3
		HANDLEBAR	
4	H763	Handlebar	1
		FOLDING KICKSTARTER	
5	T29/30	Kickstarter assembly, folding	1
6	T29	Lever, kickstarter	1
7	T30	Pedal, ,, ...	1
8	F1814	Rubber, ,, ...	1
9	T111	Nut, ,, pedal to lever	1
10	T112	Washer, ,, ,, ,, ,, ...	1
11	S52-1	Cotter pin, lever to shaft	1
		OIL TANK	
12	F3328	Oil tank complete	1
13	F1792	Plug oil tank drain	1
14	PT104B	Washer, drain plug	1
15	F1034	Cap, oil tank hinged filler	1
		$\frac{3}{32}''$ dia. × 1″ split pin	1
16	E2963	Pipes, engine feed and scavenge assembly	1
17	F3189	Pipe, oil scavenge top half	1
18	F3182	Nut, ,, ,, ,, ,, pipe	1
19	MF119A	Connection, oil pipe rubber	2
20	F2567	Bracket, tank fixing lower	1
21	F1213	Bolt, ,, ,, ,, ...	1
		PETROL FEED PIPES	
22	F2693	Pipe, petrol feed L/H	1
23	F2692	,, ,, ,, R/H	1
24	F2688	,, mixing chambers connecting	1
25	F2879	,, connecting pipe to float chamber	1
26	D177-2	Clip, ,, ,, ,, ,, ,, pipe	2
		THROTTLE CABLE	
27	D216	Cable assembly, throttle	1
28	D218	,, handlebar to junction box	1
29	D219	,, junction box to carburetter	2
30	D101	Ferrule, at twist grip and junction box	10
31	6/132	,, carburetter end	2
32	D104	Adjuster, cable	3
33	D83	Nipple, twist grip end	1
34	NS191	,, junction box and carburetter	5
35	244/104	Junction box, dual cable	1

SEE SPECIMEN ORDER IN PREFACE

REF. No.	PART No.	DESCRIPTION	QUANTITY
		CARBURETTERS	
1	76/AO	Mixing chamber, assembly L/H	1
2	76/AN	,, ,, ,, R/H	1
3	76/414	,, ,, only L/H	1
4	76/415	,, ,, ,, R/H	1
5	6/058	Block jet R/H	1
6	6/058LH	,, ,, L/H	1
7	6/403	Top, mixing chamber	2
8	6/032B	Cap ,, ,, ...	2
9	4/235	Spring mixing chamber cap	2
10	4/241	Screw, ,, ,, ,, spring	2
		Screw, air blanking	2
11	6/052	Valve, throttle 6/4	2
12	4/263	Spring, throttle valve	2
13	4/060	Split pin throttle valve	2
14	6/065	Needle, jet	2
15	4/230	Clip, needle	2
16	4/061	Jet, needle 109	2
17	4/042	Jet, main 180	2
18	6/062	Union nut, mixing chamber	2
19	6/040	Washer, union nut	2
20	4/043	Bolt, float chamber, holding	2
21	4/053	Washer, holding bolt	4
22	13/129	Screw, pilot air adjusting	2
23	4/148	Spring, ,, ,, ,, ...	2
24	4/063	Screw, throttle stop	2
25	16/010	Locknut ,, ,, ...	2
26	6/038	Tube, air intake	2
27	14/538	Float chamber assembly (remote)	1
28	14/217R	Body, float chamber	1
29	14/138	Cover, ,, ,, ...	1
30	14/021	Screw, ,, ,, lock	1
31	14/031	Tickler, float	1
32	14/032	Spring, tickler	1
33	14/033	Pin, ,, split	1
34	14/189	Washer, ,, ...	1
35	14/245	Needle, float	1
36	14/304	Float	1
37	14/279	Spring, float bow	1
38	193/084	Pin, float securing cotter	1
39	14/253	Seating, needle valve	1
40	14/252	Washer, ,, ,, seating	1
41	14/250	Banjo, 90°	1
42	14/275	Washer, banjo	2

APPLY TO ACCESSORY MANUFACTURERS FOR SERVICE UNITS

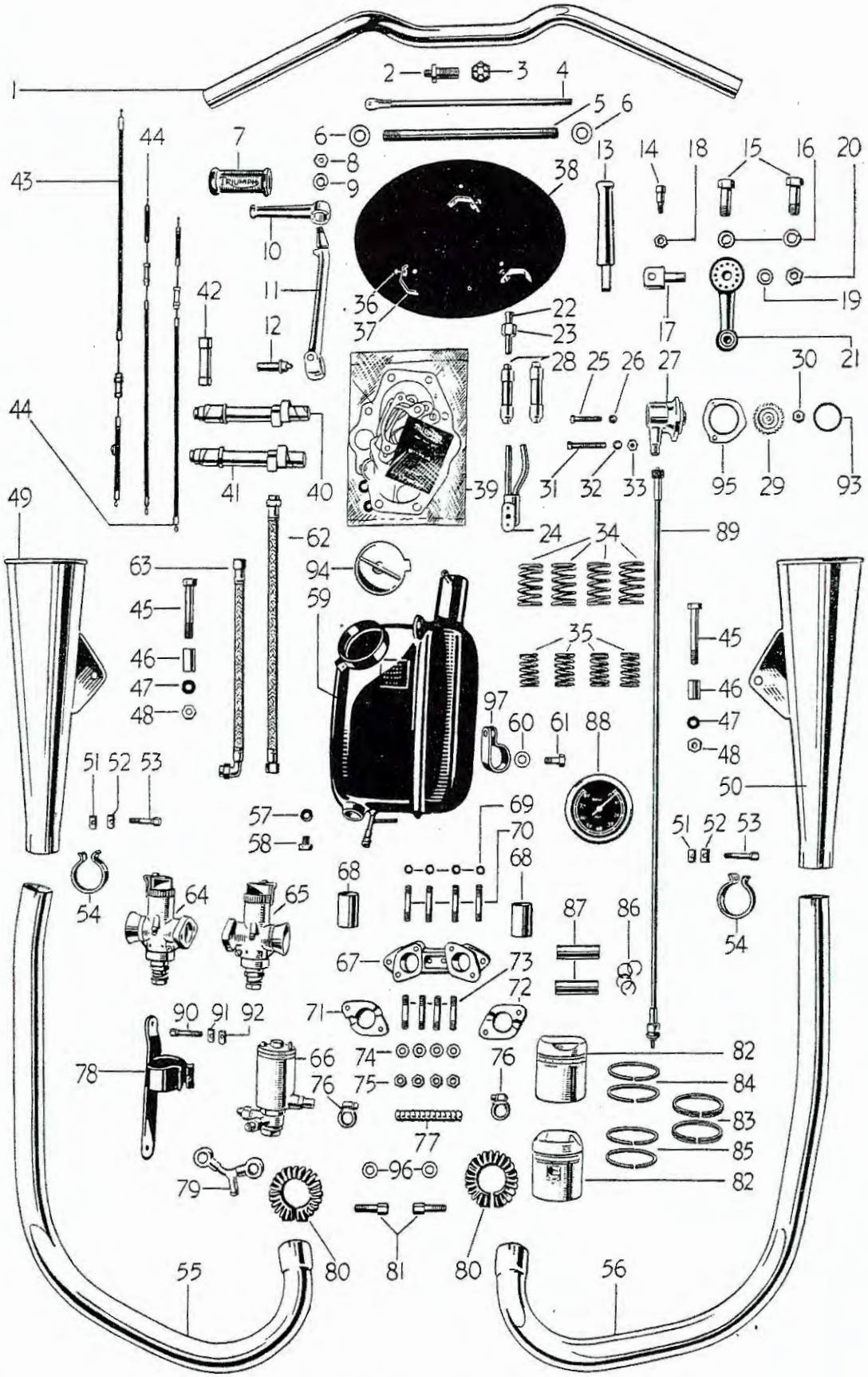

T100 RACING KIT

RACING KIT
INDEX TO ILLUSTRATION ON PAGE 92

Illust. No.	Part No.	Page No.	Ref. No.
1	H.763	90	4
2	F.2648	89	40
3	W.743	89	41
4	F.1015E	89	39
5	F.3166	89	37
6	F.3193	89	38
7	F.1814	38	33
8	T.111	38	31
9	T.112	38	32
10	T.30	38	30
11	T.29	38	29
12	S.52-1	38	34
13	F.3163	89	28
14	F.3162	89	30
15	F.2645	89	34
16	SCZ.45	89	66
17	F.3161	89	29
18	S.1-51	89	31
19	PCW.73A	89	32
20	F.880	89	35
21	F.3160	89	33
22	F.3189	90	17
23	F.3182	90	18
24	E.2963	90	16
25	E.2995	89	8
26	H.430	89	26
27	E.3022	89	3
28	MF.119A	90	19
29	E.2994	89	5
30	GS.297	89	6
31	E.2996	89	9
32	E.1612	89	11
33	E.2997	89	10
34	E.3002	38	13
35	E.3001	88	12
36	H.687	90	3
37	H.766	90	2
38	F.3192	90	1
39	GST100/51	89	12
40	E.3134	88	10
41	E.3134	88	10
42	244/104	90	35
43	D.218	90	28
44	D.219	90	29
45	F.3191	88	36
46	F.3190	88	38
47	S.26-1	88	39
48	PO.172A	88	37
49	E.2735	88	31
50	E.2734	88	30
51	TE.164C	88	34
52	TE.164D	88	35
53	TE.164E	88	33
54	E.2271	88	32
55	E.2976	88	24
56	E.2974	88	23
57	PT.104B	90	14
58	F.1792	90	13
59	F.3328	90	12
60	S.26-3	71	40
61	F.1213	90	21
62	F.2692	90	23
63	F.2693	90	22
64	76/AN	91	2
65	76/AO	91	1
66	14/538	91	27
67	E.3006	88	16
68	E.3009	88	17
69	E.2728	88	15
70	E.3004	88	14
71	E.3008	88	20
72	E.3007	88	19
73	E.2674	88	18
74	S.25-3	88	22
75	S.1-51	88	21
76	D.177-2	90	26
77	F.2879	90	25
78	F.2639	94	1
79	F.2688	90	24
80	E.1270	88	27
81	E.409	88	28
82	E.2489	88	3
	E.2884	88	4
83	GE.29	88	7
84	E.656	88	5
85	E.3048	88	6
86	WE.479	88	9
87	WE.203E	88	8
88	RC.126	89	1
89	52091/5	89	2
90	TE.164E	94	4
91	TE.164D	94	6
92	TE.164C	94	5
93	E.3050	89	4
94	F.1034	90	15
95	E.3010	89	25
96	E.410A	88	29
97	E.2567	90	20

REF. No.	PART No.	DESCRIPTION	QUANTITY

FLOAT CHAMBER BRACKET

1	F2639	Bracket assembly, float chamber	1
2	F1213	Bolt, bracket to oil tank bottom	1
3	S26-3	Washer, bolt spring	2
4	TE164E	Bolt, float chamber clip	1
5	TE164C	"D" Nut, float chamber clip bolt	1
6	TE164D	"D" Washer	1
		Use sandpaper packing between float chamber and bracket	

MUDGUARD GROUP

FRONT MUDGUARD

7	CP106	Mudguard front, complete with fittings	1
		For sub-assemblies refer to Front Mudguard Group, Page 00 TR5 column	

REAR MUDGUARD

8	CP107	Mudguard rear, complete with fittings	1
9	F2653	Blade only	1
10	F2654	Stay, centre	1
11	F2656	Stay, back	1
12	H532	Clip, stay to blade	4
13	H533	Backing strip, clip	4
14	DS57	Bolt, clip to blade	8
15	E1612	Washer, for DS57 bolt	8
16	F879	Nut, ,, ,, ,, ...	8
17	PF204	Clip, mudguard to frame lower	1
18	F3198	Bracket, ,, ,, ,, bridge	1
19	F444	Backing strip, clip and bracket	2
20	F2659	Backing strip for PF204 clip	1
21	S23-42	Bolt, clip and bracket	4
22	S25-1	Washer, clip and bracket	4
23	E579	Bolt, stays to frame	2
24	S25-2	Washer, stays to frame	2

GEARBOX

For close ratio gears see page 00

PARTS TO CONVERT TO SUIT ALCOHOL FUEL

25	E3046	Block, cylinder (cast iron)	1
26	CP69	Piston assembly (CR.12:1)	2
		Sub-assemblies as standard	
27	F2693	Pipe, petrol feed	2
28	14/604	Float chamber assembly	2
		Needle jet .113	2
29	4/042*	Main jet 660	2

*Correct jet size to ascertain during practice runs.
The standard jet Block can be modified by drilling out the pilot jet orifice to .031″ (No.68 morse drill).

TREASURY NOTES MUST BE REGISTERED

PROPRIETARY GROUP

Ancillary equipment which is fitted to our motor cycles is of the highest quality and is guaranteed by the manufacturers and not by ourselves. Any repairs or claims should be made to the actual maker who will always give owners every possible assistance. The following are the addresses of the various manufacturers :—

CARBURETTERS	Messrs. Amal Ltd., Holford Works, Perry Barr, Birmingham, 20.
CHAINS	The Renold and Coventry Chain Co. Ltd., Didsbury, Manchester.
ELECTRICAL EQUIPMENT	Messrs. J. Lucas, Ltd., Gt. Hampton Street, Birmingham, 18.
MAGNETOS	Messrs. J. Lucas, Ltd., Gt. Hampton Street, Birmingham, 18.
	Messrs. British Thomson-Houston, Ltd., Alma Street, Coventry.
SADDLES	Messrs. Terrys Ltd., 210, Corporation Street, Birmingham.
	J. B. Brooks & Co. Ltd., Great Charles Street, Birmingham, 3.
SPARKING PLUGS	K.L.G. Sparking Plugs, Putney Vale, London, S.W.15.
	Messrs. Lodge Plugs Ltd., Rugby.
	Champion Sparking Plug Co. Ltd., Feltham, Middlesex.
SPEEDOMETERS	Messrs. Smiths Motor Accessories Ltd., Cricklewood Works, London, N.W.2.

AMAL CARBURETTER GROUP

REF. No.	PART No.	DESCRIPTION	5T	6T	TRS	T100
1	276FE/1AT/M	Carburetter assembly	1	—	—	—
2	276FF/1AT/M	,, ,, ...	—	—	1	—
3	276FH/1AT/M	,, ,, ...	—	—	—	1
4	276/433R	Chamber, mixing	1	—	—	—
5	276/432R	,, ,, ...	—	—	1	1
6	6/423	Top, mixing chamber	1	—	—	1
7	6/403	,, ,, ,, ...	—	—	1	—
8	6/031	Cap, ,, ,, ...	1	—	1	1
9	4/276	Spring, mixing chamber cap	1	—	1	1
10	4/241	Screw, ,, ,, ,, spring	1	—	1	1
11	6/045	Valve, air	1	—	1	1
12	4/046	Spring, air valve	1	—	1	1
13	6/047	Guide, air valve	1	—	1	1
14	6/052	Valve throttle No. 6/3½	1	—	1	1
15	4/263	Spring, ,, valve	1	—	1	1
16	4/060	Cotter, ,, ,, ...	1	—	1	1
17	4/063	Screw, ,, ,, stop	1	—	1	1
18	16/010	Nut, ,, ,, ,, ...	1	—	1	1
19	13/129	Screw, air adjusting	1	—	1	1
20	4/148	Spring, air adjusting screw	1	—	1	1
21	4/042	Jet, main No. 140	1	—	—	—
22	4/042	,, ,, No. 150	—	—	1	1
23	206/057R	Block jet	1	—	—	—
24	206/058R	,, ,, ...	—	—	1	1
25	6/062	Nut, mixing chamber union	1	—	1	1
26	6/040	Washer jet block	1	—	1	1
27	4/061	Jet, needle No. 107	1	—	1	1
28	6/065	Needle jet No. 6	1	—	1	1
29	4/230	Clip, jet needle	1	—	1	1
30	4/043	Bolt, holding	1	—	1	1
31	4/053	Washer, holding bolt	2	—	2	2
32	4/035	Adjuster cable	1	—	—	—
33	6/132A	Ferrule cable	1	—	2	1
34	1AT/M	Chamber, float complete	1	—	1	1
35	64/192M	Body, ,, chamber	1	—	1	1
36	14/208	Cover, ,, ,, ...	1	—	1	1
37	14/021	Lockscrew, float cover	1	—	1	1
38	14/015	Float	1	—	1	1
39	14/024	Needle, valve	1	—	1	1
40	14/209	Tickler	1	—	1	1
41	14/210	Stop, tickler	1	—	1	1
42	14/032	Spring tickler	1	—	1	1
43	14/289	Cotter ,, ...	1	—	1	1
44	64/353	Screw, platform plug	1	—	1	1
45	23/110	Washer, ,, ,, screw	1	—	1	1
46	14/178	Locknut, seating	1	—	1	1
47	14/175	Washer, ,, ...	1	—	1	1
48	NA43	,, carburetter flange	1	—	—	—
49	NA43A	,, ,, ,, ...	—	—	1	1
50	E2968	Block, insulating	—	—	1	—

WHEN IN DOUBT SEND SAMPLE

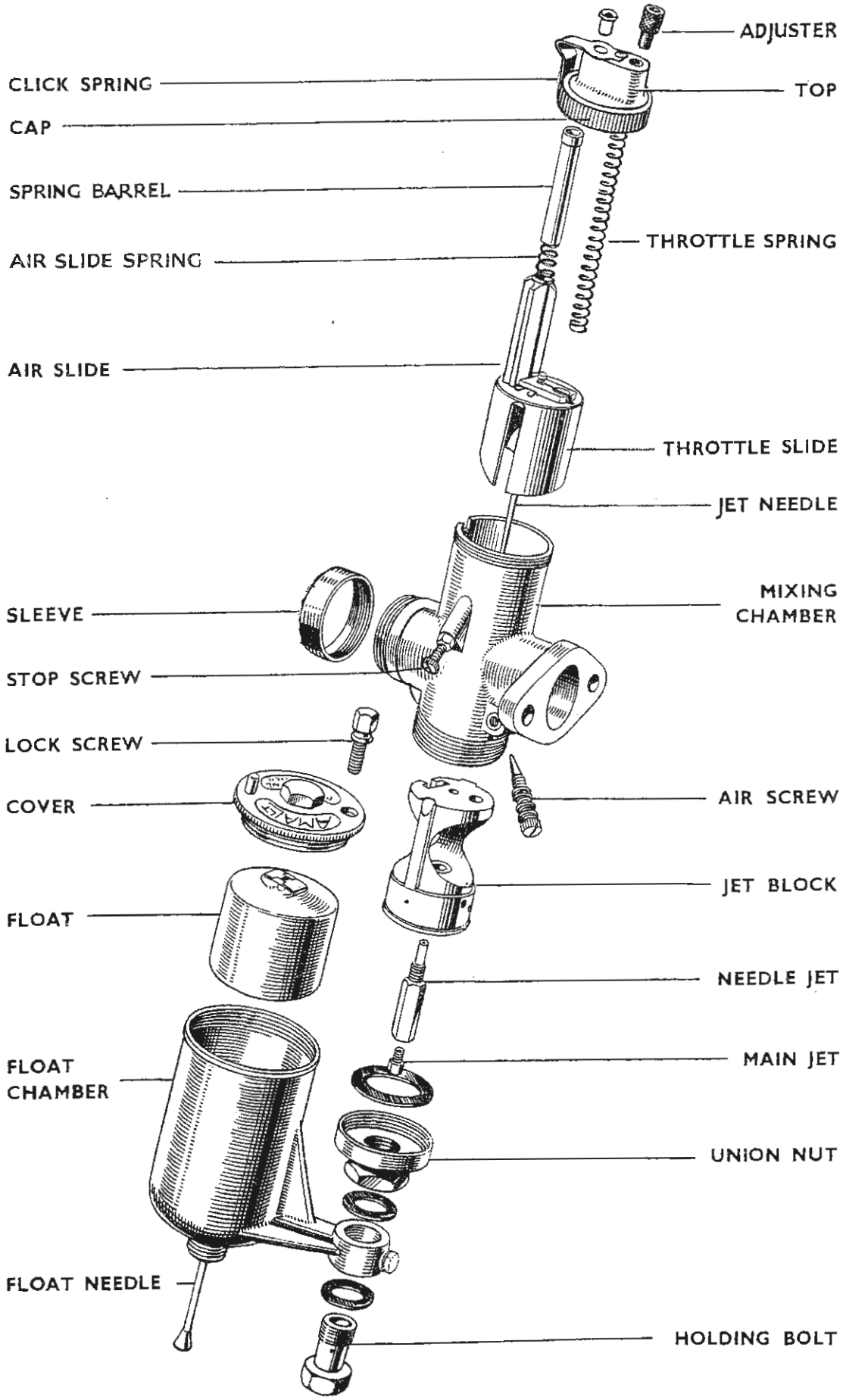

AMAL CARBURETTER

S.U. CARBURETTER GROUP

REF. No.	PART No.	DESCRIPTION	5T	6T	TR5	T100
1	590	Carburetter MC2	—	1	—	—
		Less Triumph fittings				
		FITTINGS (TRIUMPH)				
2	F3331	Abutment bracket, throttle cable	—	1	—	—
3	F3358	Screw, bracket to carburetter	—	2	—	—
4	E1553	Stud, carburetter flange	—	1	—	—
5	F3339	Vent pipe, carburetter to air filter	—	1	—	—
6	E3075	Washer, carburetter to manifold joint ...	—	1	—	—
		CARBURETTER BODY				
7	4800/2	Body, carburetter body c/w guide pin and plug	—	1	—	—
8	4923	Adaptor, throttle barrel	—	1	—	—
9	4805	Screw, adaptor to body	—	4	—	—
10	4804	Joint, ,, ,, ,, ...	—	1	—	—
11	4929	Bolt, piston vent banjo	—	1	—	—
12	4928	Banjo, ,, ,, ...	—	1	—	—
13	4857	Screw, 2BA Plug	—	1	—	—
14	1863	Washer, 2AB Plug screw	—	1	—	—
		SUCTION CHAMBER				
15	4841 3171/1 4842/1	Chamber, suction complete	—	1	—	—
16	4387	Spring, piston	—	1	—	—
17	3071	Washer, thrust	—	1	—	—
18	149	Screw, needle	—	1	—	—
19	M9	Needle, jet	—	1	—	—
20	4857	Screw, chamber securing	—	2	—	—
21	1863	Washer, spring	—	2	—	—
22	4900	Washer, oil cap	—	1	—	—
23	4920	Oil cap, octagonal	—	1	—	—
		JET ASSEMBLY				
24	112/1394	Jet	—	1	—	—
25	3232	Screw, jet	—	1	—	—
26	3230	Bearing, jet top half	—	1	—	—
27	3231	,, ,, bottom half	—	1	—	—
28	122	Washer, top half (copper)	—	1	—	—
29	3233	,, bottom half (copper)	—	1	—	—
30	117	Ring, sealing (brass)	—	1	—	—
31	118	,, ,, (cork)	—	1	—	—

SEE SPECIMEN ORDER IN PREFACE

REF. No.	PART No.	DESCRIPTION	5T	6T	TR5	T100
1	119/1	Washer, gland (brass)	—	2	—	—
2	120	,, ,, (cork)	—	2	—	—
3	1158	Spring ,, ...	—	1	—	—
4	121	Nut, adjusting	—	1	—	—
5	114	Spring	—	1	—	—
		JET LEVER AND LINKAGE				
6	4882	Lever, jet	—	1	—	—
7	4883	Link, jet	—	1	—	—
8	108	Pivot pin, long	—	1	—	—
9	381	,, ,, short	—	1	—	—
10	4884/1	Bolt	—	1	—	—
11	4885	Washer, fibre	—	2	—	—
12	4875/2	Washer, double coil spring	—	1	—	—
12a	5023	Washer, plain	—	1	—	—
13	156	Nut, 2BA	—	1	—	—
14	109	Split pin	—	2	—	—
15	4872	Spring, return	—	1	—	—
		FLOAT CHAMBER				
16	1216	Chamber, float	—	1	—	—
17	4517	Lid, float chamber	—	1	—	—
18	1223	Float	—	1	—	—
19	1121/1859	Needle and seat	—	1	—	—
20	1981	Lever, hinged	—	1	—	—
21	1251	Pin, ,, lever	—	1	—	—
22	130	Washer, fibre	—	1	—	—
23	* 4642/1	,, copper	—	1	—	—
24	1541/3	Bolt, holding	—	1	—	—
25	1163	Nut, float lid	—	1	—	—
		THROTTLE				
26	4863/4807	Spindle, throttle	—	1	—	—
27	169	Disc ,, ...	—	1	—	—
28	1358/1	Screw, throttle disc	—	2	—	—
29	106	Pin, taper	—	1	—	—
30	1500/6	Lever, throttle	—	1	—	—
31	694	Bolt	—	1	—	—
32	156	Nut	—	1	—	—
33	246	Washer, spring	—	1	—	—
34	3464	Screw, adjusting	—	1	—	—

** Now superseded by 1 off—5026, brass washer. 2 off—5027, fibre washer. The brass washer should be placed between the two fibre washers when assembled to the bolt.*

TREASURY NOTES MUST BE REGISTERED

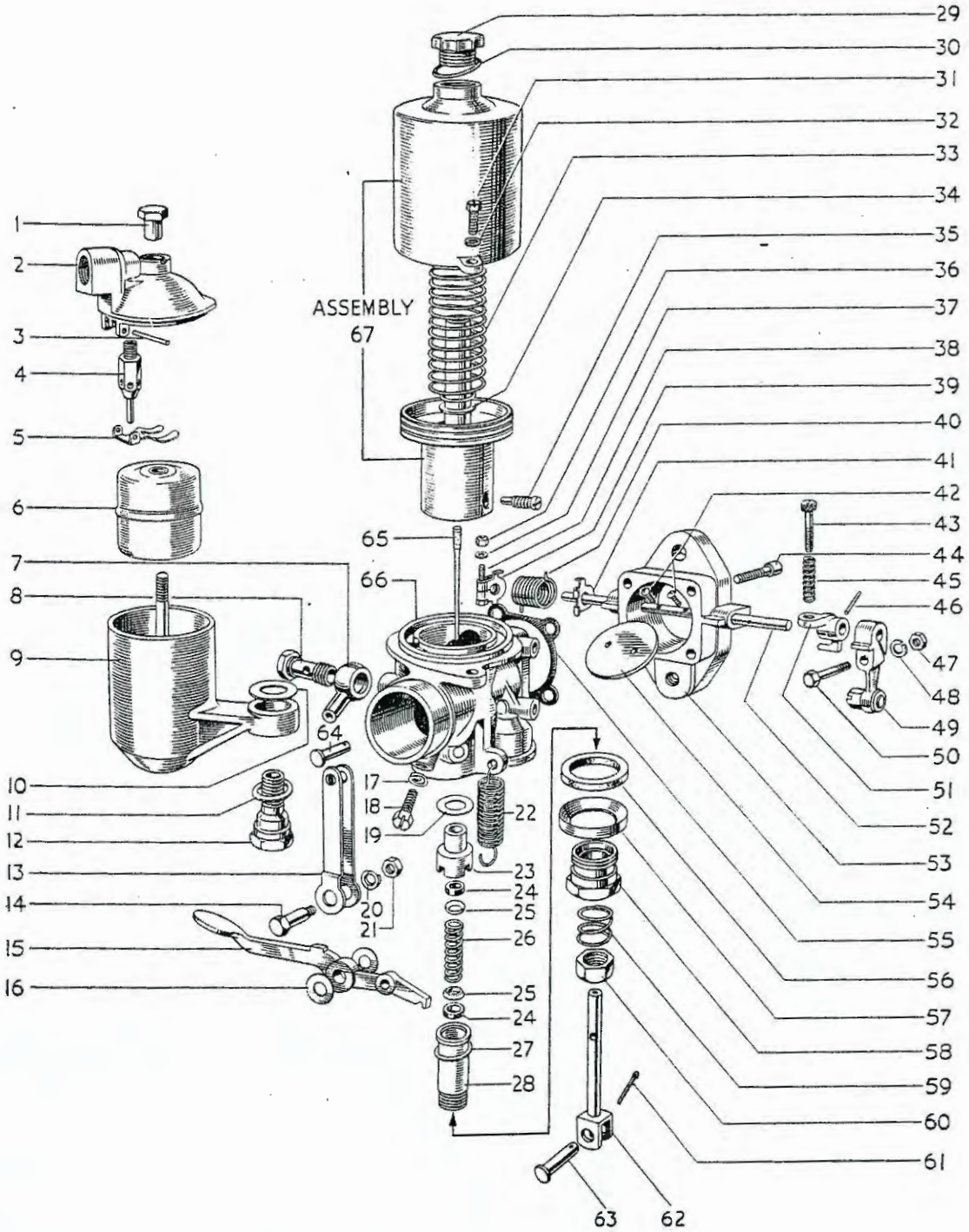

S.U. CARBURETTER

TYPE MC2.

REF. No.	PART No.	DESCRIPTION	5T	6T	TR5	T100
1	3465	Spring adjusting screw lock	—	1	—	—
2	4880	Plate, anchor	—	1	—	—
3	4871	Spring, return	—	1	—	—
4	4881	Clamp	—	1	—	—
5	669	Bolt	—	1	—	—
6	673	Nut	—	1	—	—
7	4612	Washer	—	1	—	—

S.U. CARBURETTER
INDEX TO ILLUSTRATION ON PAGE 100

Illust. No.	Part No.	Page No.	Ref. No.	Illust. No.	Part No.	Page No.	Ref. No.
1	1163	99	25	35	149	98	18
2	4517	99	17	36	673	101	6
3	1251	99	21	37	4612	101	7
4	1121/1859	99	19	38	669	101	5
5	1981	99	20	39	4881	101	4
6	1223	99	18	40	4871	101	3
7	4928	98	12	41	4880	101	2
8	4929	98	11	42	1358/1	99	28
9	1216	99	16	43	3464	99	34
10	130	99	22	44	4805(4 off)	98	9
11	*4642/1	99	23	45	3465	101	1
12	1541/3	99	24	46	106	99	29
13	4883	99	7	47	156	99	13
14	4884/1	99	10	48	246	99	33
15	4882	99	6	49	1500/6	99	30
16	4885(2 off)	99	11	50	694	99	31
17	1863	98	14	51	4863/4807	99	26
18	4857	98	13	52	See 51		
19	122	98	28	53	4923	98	8
20	4875/2	99	12	54	169	99	27
21	156	99	13	55	4804	98	10
22	4872	99	15	56	118	98	31
23	3230	98	26	57	117	98	30
24	120	99	2	58	3232	98	25
25	119/1	99	1	59	114	99	5
26	1158	99	3	60	121	99	4
27	3233	98	29	61	109(2 off)	99	14
28	3231	98	27	62	112/1394	98	24
29	4920	98	23	63	108	99	8
30	4900	98	22	64	381	99	9
31	4857(2 off)	98	13	65	M.9	98	19
32	1863	98	14	66	4800/2	98	7
33	4387	98	16	67	4841		
34	3071	98	17		3171/1	98	15
					4842/1		

* *See note on page 99*

FOR IDENTIFICATION OF PARTS SEE PAGE 6

MAGNETO (B.T.H.) GROUP

REF. No.	PART No.	DESCRIPTION	5T	6T	TR5	T100
1	D152	Magneto, less auto advance	1	1	—	—
2	D152/AC9	Magneto, manual control	—	—	1	1
3	SKC10917-4	Housing, magneto main	1	1	1	1
4	SKC741-G1	Ball race	2	2	2	2
5	SKC6123-1	Insulation washer, ball race	2	2	2	2
6	CR22186-1	Shim, bearing adjusting .002″ and .003″ ...	1	1	1	1
7	CZ108979	Seal, oil retaining	1	1	1	1
8	CR32042	Magnet	1	1	1	1
9	SKC6245-1	Screw, magnet locating	2	2	2	2
10	SKC24291-1	Cover, magnet	1	1	1	1
11	3BA $\frac{5}{16}$″	Screw, magnet cover (roundhead)	2	2	2	2
12	SKC9952-8	Washer, magneto cover fixing	2	2	2	2
13	CR23290-1	Screw, safety spark gap	2	2	2	2
14	SKC6799-1	Locking tab, spark gap screw	2	2	2	2
15	SKC87159-G1	Holder, collector brush	2	2	—	—
16	SKC87159-G2	,, ,, ,, ...	—	—	2	2
17	SKC6306-G2	Brush and spring collector	2	2	2	2
18	CR87404-1	Washer, collector brush holder sealing ...	2	2	2	2
19	CR87160-1	Nut, ,, ,, ,, ring	2	2	2	2
20	CZ60707-G19	Cable H.T.	2	2	2	2
21	SKC6397-1	Screw H.T. cable securing	2	2	2	2
22	E2415	Clip, H.T. cable to carburetter manifold ...	1	1	1	1
23	CR87403-1	Ferrule, H.T. cable water-proof	2	2	2	2
24	CY50495-G1	Armature c/w condenser and end plate ...	1	1	1	1
25	SKC6115-1	Screw, armature spindle to core	4	4	4	4
26	SKC6111-1	Dowel, armature spindle	2	2	2	2
27	SKC6114-1	Screw, ,, ,, securing	4	4	4	4
28	SKC6112-1	Dowel, ,, ,, ,, ...	1	1	1	1
29	CY52078-G2	Condenser	1	1	1	1
30	SKC6636-1	Insulator, condenser (large)	2	2	2	2
31	SKC6637-1	Insulation, ,, (small)	2	2	2	2
32	CR20776-1	,, ,, bush	1	1	1	1
33	4BAx$\frac{5}{16}$″ch.hd.	Screw ,, securing	2	2	2	2
34	SKC9953-6	Washer, ,, ,, screw	2	2	2	2
35	SKC6612-G1	Slip ring	1	1	1	1
36	SKC6122-1	Washer, slip ring plain	1	1	1	1
37	SKC6180-1	,, ,, ,, spring	1	1	1	1
38	CR20774-1	Ring, reinforcing	1	1	1	1
39	CX1883-G24	Contact breaker L.H. complete	1	1	1	1
40	SKC74955-G2	Base and check spring assembly c/breaker ...	1	1	1	1
41	CZ63472-G2	Lever contact and springs	1	1	1	1
42	SKC6215-1	Spring, contact breaker reinforcing	2	2	2	2
43	SKC6208-1	Screw, ,, ,, spring	2	2	2	2
44	CR29708-1	Wick, ,, ,, lever	1	1	1	1
45	SKC29303-G1	Contact adjustable screw	1	1	1	1

WHEN IN DOUBT SEND SAMPLE

INDEX ON PAGE 107.

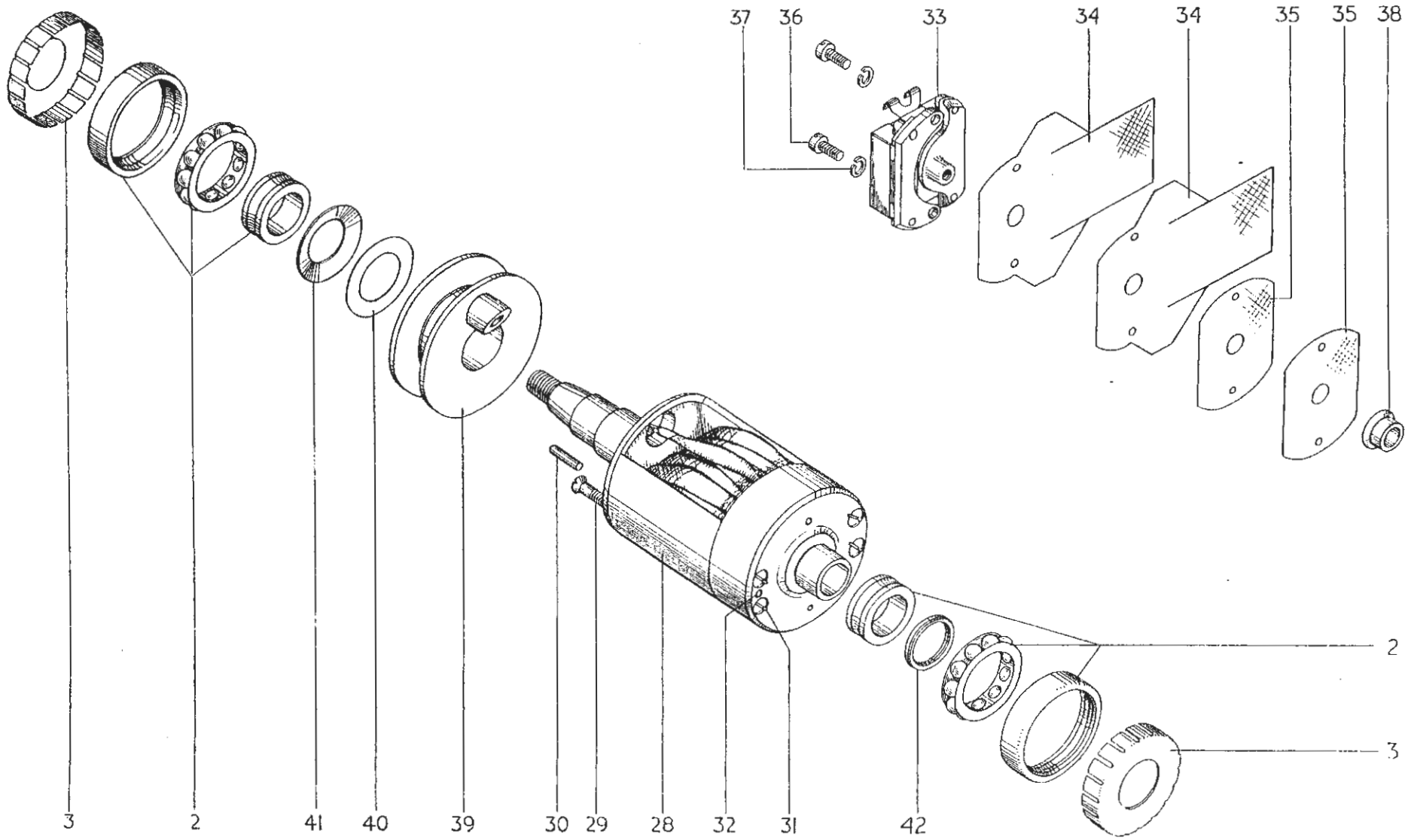

B.T.H. MAGNETO ARMATURE AND CONDENSER

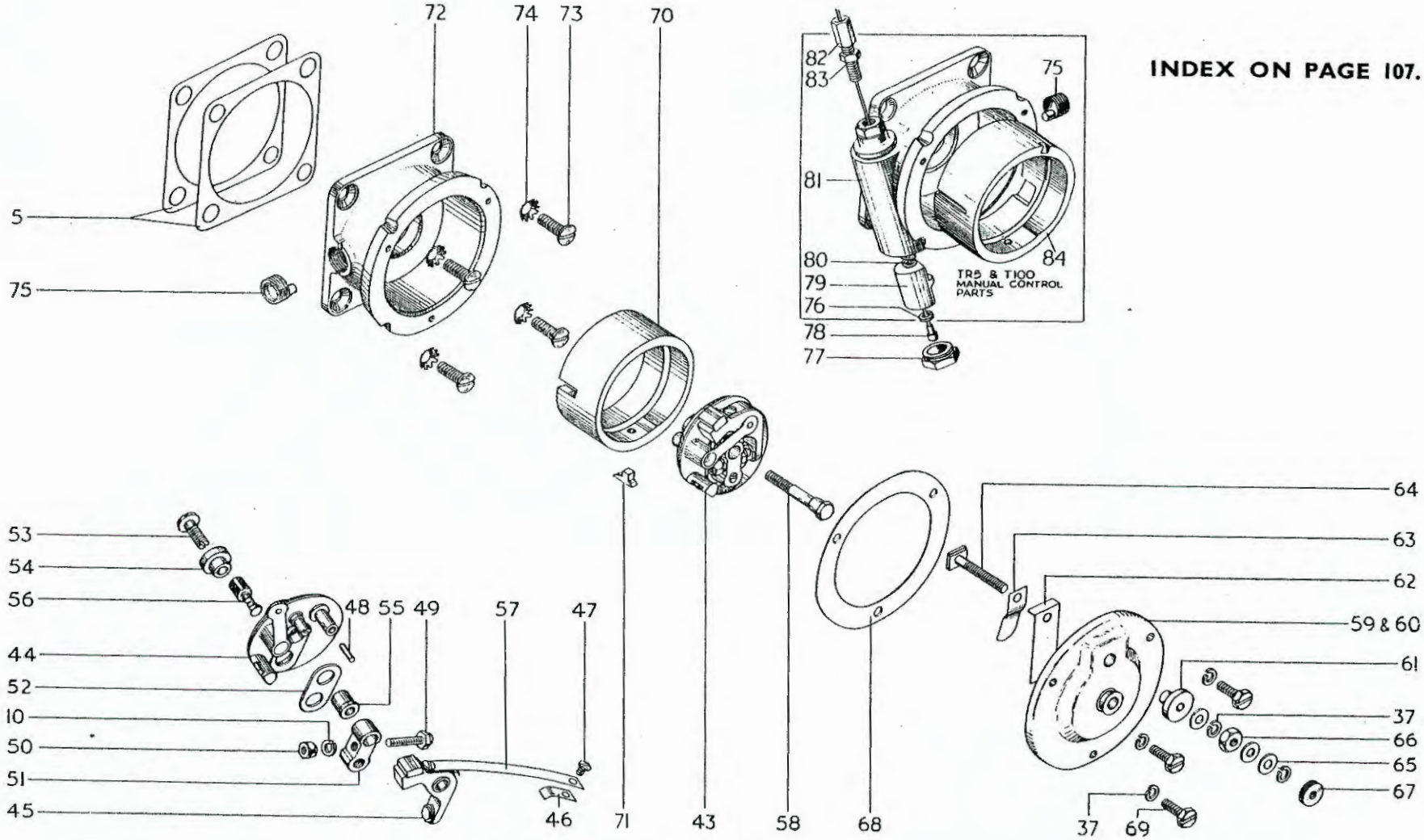

INDEX ON PAGE 107.

B.T.H. MAGNETO CONTACT BREAKER AND HOUSING

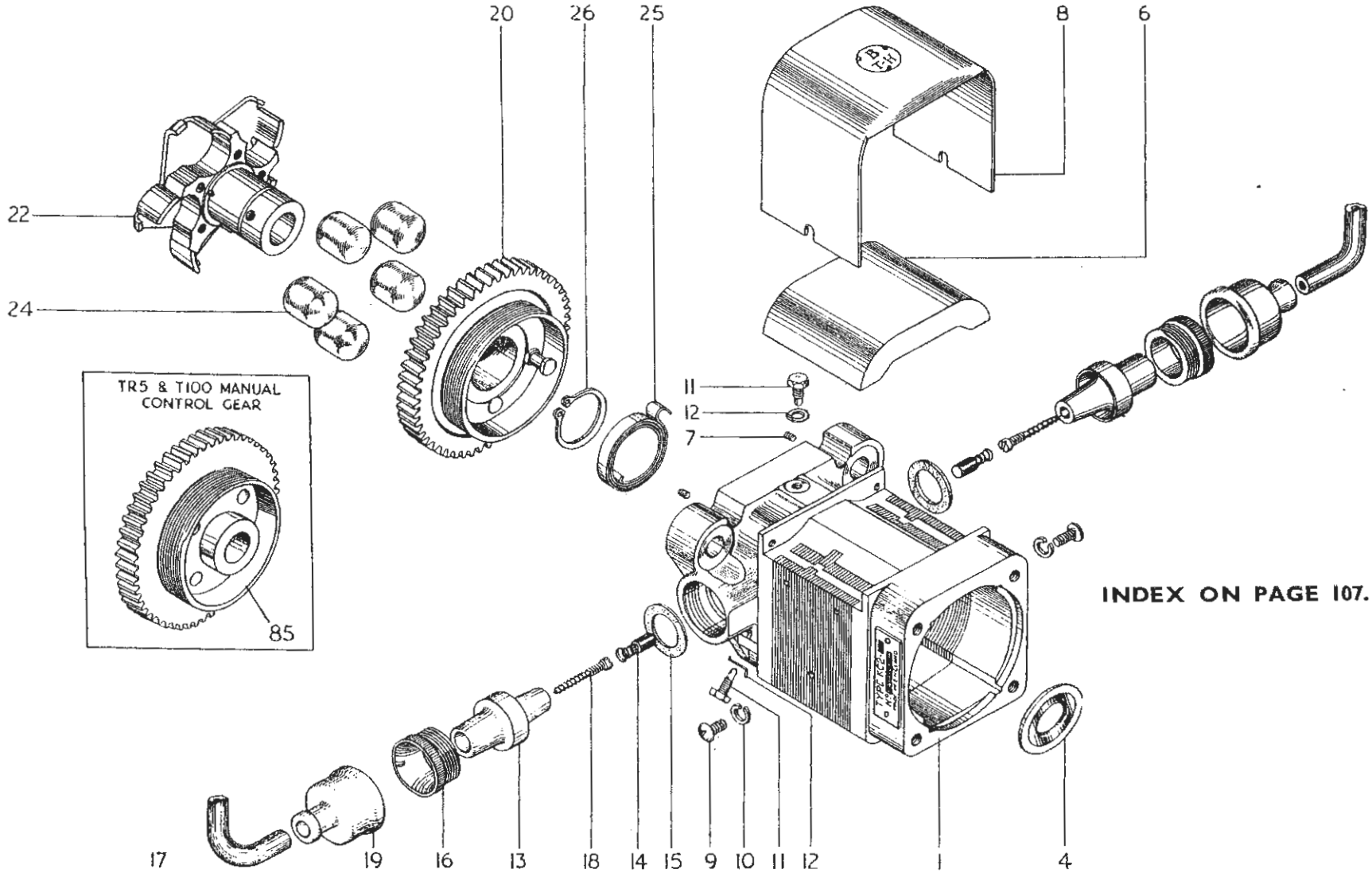

INDEX ON PAGE 107.

B.T.H. MAGNETO HOUSING AND DRIVING GEAR

REF. No.	PART No.	DESCRIPTION	5T	6T	TR5	T100
1	SKC6216-1	Nut, adjustable screw contact	1	1	1	1
2	SKC9952-8	Washer, ,, ,, ,, ...	1	1	1	1
3	SKC6235-1	Block, contact screw locating	1	1	1	1
4	SKC6213-1	Strip, insulating block	1	1	1	1
5	SKC6209-1	Screw block securing	1	1	1	1
6	SKC6210-1	Bush, screw insulating	1	1	1	1
7	SKC6212-1	Bush, block centre	1	1	1	1
8	SKC6219-G1	Brush and spring contact breaker earthing ...	1	1	1	1
9	SKC6214-1	Spring, contact breaker main	1	1	1	1
10	CR29487-1	Screw, contact breaker securing	1	1	1	1
11	CZ61580-1	Cover complete, contact breaker	1	1	1	1
12	SKC28537	Cover only, contact breaker	1	1	1	1
13	CR89533-1	Bush, contact breaker, cover insulating ...	1	1	1	1
14	CR29456-1	Strip, ,, ,, ,, ,, ...	1	1	1	1
15	CR29455-1	,, ,, ,, ,, contact	1	1	1	1
16	CR29459-1	Terminal, contact breaker cover contact ...	1	1	1	1
17	4BA STrd.	Washer, ,, ,, terminal, plain ...	3	3	3	3
18	SKC9952-6	Washer, ,, ,, ,, spring ...	2	2	2	2
19	CR26513	Nut, ,, ,, ,, lock ...	1	1	1	1
20	CR89927-1	,, ,, ,, ,, knurled ...	1	1	1	1
21	SKC88939-6	Washer, ,, ,, ,, ,, nut	1	1	1	1
22	CR28540-1	Washer, ,, ,, cover sealing ...	1	1	1	1
23	CR28571-1	Screw, ,, ,, ,, securing ...	3	3	3	3
24	SKC9952-6	Washer contact breaker cover screw	3	3	3	3
25	SKC33650	Cam, ring	1	1	—	—
26	CY52765-2	,, ,, ...	—	—	1	1
27	SKC28544-G3	Housing, cam ring	1	1	—	—
28	SKC28544-G2	,, ,, ,, ...	—	—	1	1
29	2BAx½"inst.hd.	Screw, cam ring housing	4	4	4	4
30	SKC88939-20	Washer, cam ring housing lock	4	4	4	4
31	SKC6344-1	Wick, cam ring lubricating	1	1	1	1
32	CR26381-1	Screw, timing stop	1	1	1	1
33	SKC24217	Rod, timing	—	—	1	1
34	CR24263	Spring, control	—	—	1	1
35	CR24450-1	Ferrule, rubber	—	—	1	1
36	CR32419-1	Screw for base	—	—	1	1
37	CR8978-1	Stop, bowden cable	—	—	1	1
38	CR8979-1	Nut, stop locking	—	—	1	1
39	CR32997-1	Clip with screw	—	—	1	1
40	CR24219-1	Nipple, bowden control	—	—	1	1
41	CR24218-1	Washer, ,, ,, nipple	—	—	1	1
		AUTOMATIC TIMING DEVICE				
42	E1992	Gear, c/w A T D	1	1	—	—
43	SKC127562-G2	,, only	1	1	—	—
44	CZ108934	Hub, assembly	1	1	—	—
45	CR35706-1	Roller	5	5	—	—
46	CR35707-1	Spring, main	1	1	—	—
47	CR35709-1	Circlip, nut securing	1	1	—	—
48	CR35705-1	Nut, A T D to magneto	1	1	—	—

GEAR WHEEL FOR MANUAL IGNITION SEE PAGE 29

B.T.H. MAGNETO

INDEX TO ILLUSTRATIONS ON PAGES 103, 104 AND 105

Illust. No.	Part No.	Page No.	Ref. No.
1	SKC.10917-4	102	3
2	SKC.741-G1	102	4
3	SKC.6123-1	102	5
4	CZ.108979	102	7
5	CR.22186-1	102	6
6	CR.32042-1	102	8
7	SKC.6245-1	102	9
8	SKC.24291-1	102	10
9	3BA × $\frac{5}{16}$″rd.hd.	102	11
10	SKC.9952-8	102	12
11	CR.23290-1	102	13
12	SKC.6799-1	102	14
13	SKC.87159-G1	102	15
	SKC.87159-G2	102	16
14	SKC.6306-G2	102	17
15	CR.87404-1	102	18
16	CR.87160-1	102	19
17	CZ.60707-G19	102	20
18	SKC.6397-1	102	21
19	CR.87403-1	102	23
20	SKC.127562-G2	106	43
22	CZ.108934	106	44
24	CR.35706-1	106	45
25	CR.35707-1	106	46
26	CR.35709-1	106	47
28	CY.50495-G1	102	24
29	SKC.6115-1	102	25
30	SKC.6111-1	102	26
31	SKC.6114-1	102	27
32	SKC.6112-1	102	28
33	CY.52078-G2	102	29
34	SKC.6636-1	102	30
35	SKC.6637-1	102	31
36	4BA × $\frac{5}{16}$″ch.hd.	102	33
37	SKC.9953-6	102	34
38	CR.20776-1	102	32
39	SKC.6612-G1	102	35
40	SKC.6122-1	102	36
41	SKC.6180-1	102	37
42	CR.20774-1	102	38
43	CX.1883-G24	102	39
44	SKC.74955-G2	102	40
45	CZ.63472-G2	102	41
46	SKC.6215-1	102	42
47	SKC.6208-1	102	43
48	CR.29708-1	102	44
49	SKC.29303-G1	102	45
50	SKC.6216-1	106	1
51	SKC.6235-1	106	3
52	SKC.6213-1	106	4
53	SKC.6209-1	106	5
54	SKC.6210-1	106	6
55	SKC.6212-1	106	7
56	SKC.6219-G1	106	8
57	SKC.6214-1	106	9
58	CR.29487-1	106	10
59	CZ.61580-1	106	11
60	SKC.28537	106	12
61	CR.89533-1	106	13
62	CR.29456-1	106	14
63	CR.29455-1	106	15
64	CR.29459-1	106	16
65	4 BA Std.	106	17
66	CR.26513	106	19
67	CR.89927-1	106	20
68	CR.28540-1	106	22
69	CR.28571-1	106	23
70	SKC.33650	106	25
71	SKC.6344-1	106	31
72	SKC.28544-G3	106	27
73	2 BA × $\frac{1}{2}$″ hd.	106	29
74	SKC.88939-20	106	30
75	CR.26381-1	106	32
76	CR.24218	106	41
77	CR.32419-1	106	36
78	CR.24219	106	40
79	SKC.24217	106	33
80	CR.24263	106	34
81	SKC.28544-G2	106	28
82	CR.8978-1	106	37
83	CR.8979-1	106	38
84	CY.52765-2	106	6
85	E.2741	29	14

FOR IDENTIFICATION OF PARTS SEE PAGE 6

LUCAS ELECTRICAL EQUIPMENT GROUP

REF. No.	PART No.	DESCRIPTION	5T	6T	TR5	T100
		DYNAMO (TYPE E3L-LI-O)				
1	20009F	Dynamo complete (positive earth)	1	1	1	1
2	200712	Armature	1	1	1	1
3	200738	Brush gear	1	1	1	1
4	200713	Bracket, commutation end	1	1	1	1
5	189210	Bearing, commutator end	1	1	1	1
6	200718	Cover, ,, ,, ...	1	1	1	1
7	200761	Plate, drive and oil seal end	1	1	1	1
8	200760	Bracket, drive and oil seal end	1	1	1	1
9	189307	Bearing, ,, ,, ,, ,, ...	1	1	1	1
10	200731	Coil, field	1	1	1	1
11	200609	Band assembly, cover	1	1	1	1
12	188818	Nipple, cable fixing	2	2	2	2
13	200212	Plate, ,, clamp	1	1	1	1
14	115850	Screw, ,, ,, plate	1	1	1	1
15	200732	Bolt, through fixing	2	2	2	2
16	165078	Nut, ,, ,, bolt	2	2	2	2
17	188330	Washer, ,, ,, ,, ...	2	2	2	2
18	200737	Brush set	1	1	1	1
19	220197	Spring set, brush	1	1	1	1
20	189386	Key, woodruff	1	1	1	1
21	E2451	Pinion, dynamo	1	1	1	1
22	111700	Screw, ,, pinion	1	1	1	1
23	188378	Washer, ,, ,, ...	1	1	1	1
24	E2228	Nut, (dome) dynamo to gear case	1	1	1	1
25	E2414	Stud, dynamo fixing	1	1	1	1
26	E2226	Washer, ,, to crankcase joint	1	1	1	1
27	E2230	Strap, ,, fixing	1	1	1	1
28	460025	Swivel, ,, strap	2	2	2	2
29	112450	Screw, ,, ,, ...	2	2	2	2
30	E2784	Cover plate, crankcase (when dynamo is removed)	—	—	1	1
		CUT-OUT AND REGULATOR UNIT (MCR2-L)				
31	37097B	Regulator, complete	1	1	1	1
32	391454	Cover, cut out	1	1	1	1
33	391453	Clip, cover spring	1	1	1	1
34	DS57	Bolt unit rear stays	2	2	2	2
35	F879	Nut, for DS57	2	2	2	2
36	E1612	Washer for F879	2	2	2	2
		HEADLAMP NACELLE (TYPE MCF700)				
37	50943B	Headlamp assembly	1	1	—	1
38	55324B	Rim, front	1	1	—	1
39	532426	Screw and plate, front rim fixing	1	1	—	1

APPLY TO LUCAS SERVICE DEPOTS FOR REPLACEMENT UNITS

HEAD AND PILOT LAMPS

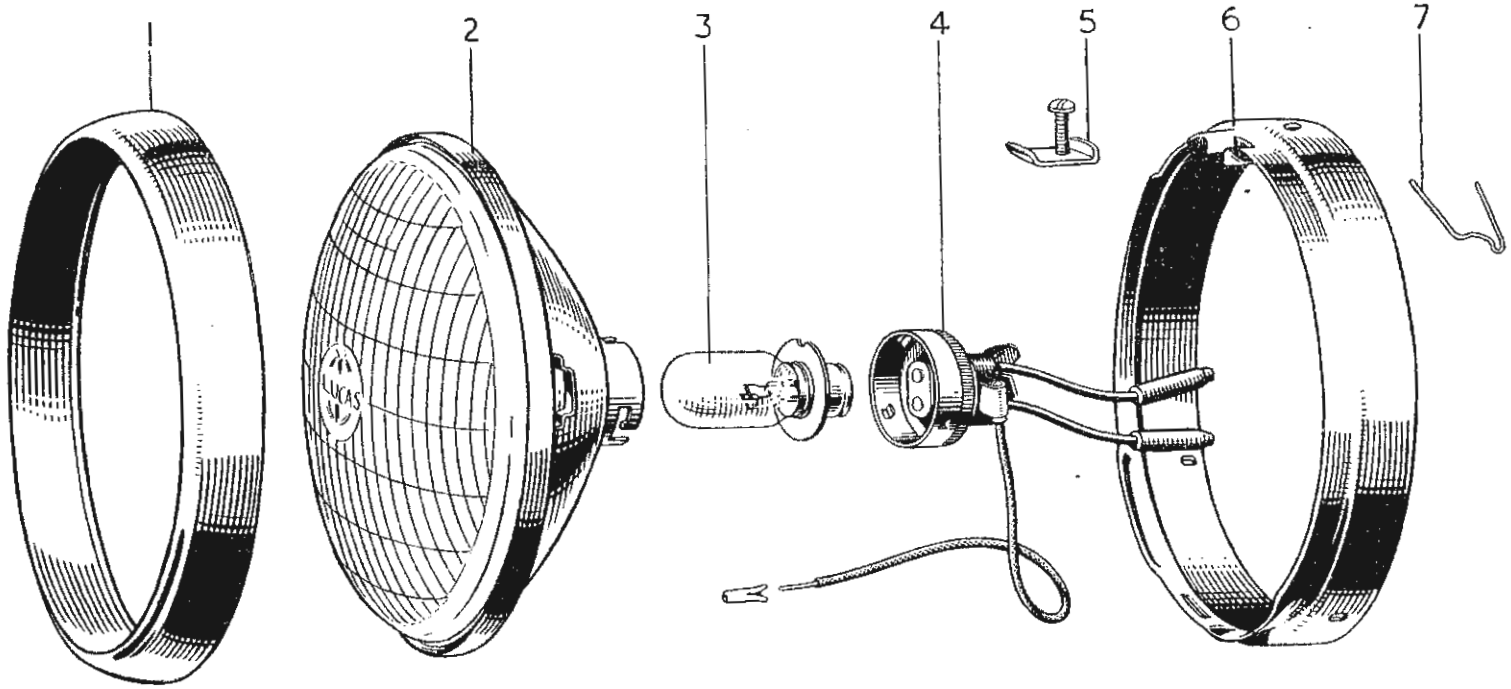

INDEX

Illust. No.	Part No.	Page No.	Ref. No.	Illust. No.	Part No.	Page No.	Ref. No.
1	553248	108	38	9	516395	110	28
2	553925	110	1	10	516386	110	29
3	312	110	5	11	988	110	35
4	859598	110	3	12	553780	110	30
5	534296	108	39	13	136231	110	32
6	553267	110	2	14	516553	110	31
7	504665	110	4	15	185037	110	34
8	516556	110	27	16	166014	110	33

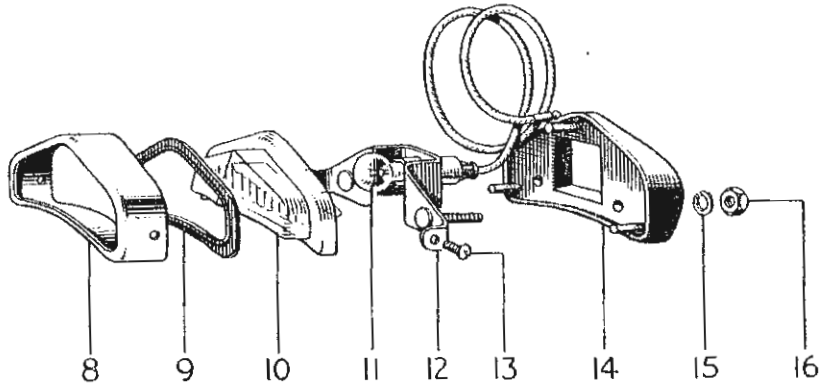

REF. No.	PART No.	DESCRIPTION	5T	6T	TR5	T100
1	553925	Glass and reflector unit	1	1	—	1
2	553267	Ring, lamp fixing	1	1	—	1
3	859598	Adaptor, bulb	1	1	—	1
4	504665	Fixing wire, light unit	6	6	—	6
5	312	Bulb, pre-focused 30/24W.	1	1	—	1
		HEADLAMP (TROPHY)				
6	50791A	Headlamp assembly	—	—	1	—
7	509487	Rim, lamp	—	—	1	—
8	550875	Glass, lamp	—	—	1	—
9	553147	Reflector assembly	—	—	1	—
10	553065	Bead, rubber joint	—	—	1	—
11	500291	Wire, glass fixing	—	—	4	—
12	509936	Catch assembly, rim	—	—	1	—
13	504801	Holder, main bulb, c/w clip and screw ...	—	—	1	—
14	551807	Clip and Screw, bulb holder	—	—	1	—
15	552258	Screw, bulb holder clip	—	—	1	—
16	500181	Interior, pilot bulb	—	—	1	—
17	809793	Plug and Socket	—	—	1	—
18	364455	Ammeter	—	—	1	—
19	351551	Switch, light	—	—	1	—
20	308312	Panel, instrument	—	—	1	—
21	516183	Beading, ,, panel	—	—	1	—
22	523429	Screw, ,, ,, ...	—	—	4	—
23	188818	Nipple, cable fixing	—	—	1	—
24	200	Bulb, pilot 3w	—	—	1	—
25	169	Bulb, main 30—30w	—	—	1	—
		PILOT LAMP (TYPE 517)				
26	52184	Pilot lamp assembly	1	1	—	1
27	516556	Rim, lamp	1	1	—	1
28	516395	Bead, lamp rubber	1	1	—	1
29	516386	Lense, lamp glass	1	1	—	1
30	553780	Adaptor, lamp	1	1	—	1
31	516553	Gasket, lamp to nacelle	1	1	—	1
32	136231	Screw, rim to lamp body	2	2	—	2
33	166014	Nut, lamp body to nacelle	2	2	—	2
34	185037	Washer, lamp body to nacelle	2	2	—	2
35	988	Bulb, pilot	1	1	—	1

APPLY TO LUCAS SERVICE DEPOTS FOR REPLACEMENT PARTS

REF. No.	PART No.	DESCRIPTION	5T	6T	TR5	T100
		TAIL LAMP				
1	53216A	Lamp, tail	1	1	1	1
2	526320	Base assembly less bulb	1	1	1	1
3	526310	Body, assembly with glass	1	1	1	1
4	526302	Cover, rubber	1	1	1	1
5	200	Bulb, 3W.	1	1	1	1
6	130264	Screw, tail lamp	3	3	3	3
7	166074	Nut, ,, ,, . screw	3	3	3	3
		TAIL LAMP (STOP LIGHT PATTERN)				
8	53182	Stop and tail lamp combined	1	1	1	1
9	526293	Base assembly less bulb	1	1	1	1
10	526310	Body assembly with glass	1	1	1	1
11	526302	Cover, rubber	1	1	1	1
12	352	Bulb, 3-18w.	1	1	1	1
13	130264	Screw, tail lamp	3	3	3	3
14	166074	Nut, ,, ,, ...	3	3	3	3
15	315725	Switch, tail lamp stop	1	1	1	1
16	F3157	Bracket, tail lamp stop switch	1	1	1	1
17	H687	Screw, ,, ,, ,, ,, ...	2	2	2	2
18	GS299	Washer, ,, ,, ,, ,, ...	2	2	2	2
19	H745	Nut, ,, ,, ,, ,, ...	2	2	2	2
20	F3158	Spring switch to brake rod	1	1	1	1
21	T988	Clip, spring ,, ,, ,, ...	1	1	1	1
22	H687	Screw, clip ,, ,, ,, ...	1	1	1	1
23	GS299	Washer, ,, ,, ,, ,, ...	1	1	1	1
24	H745	Nut, ,, ,, ,, ,, ...	1	1	1	1
		WIRING HARNESS				
25	997911/860613	Harness, wiring (HOME)	1	1	—	1
26	997911/860614	,, ,, (EXPORT)	1	1	—	1
27	860613	Lead, dipper switch (HOME)	1	1	—	1
28	860614	,, ,, ,, (EXPORT)	1	1	—	1
29	994511	Harness, assembly	—	—	1	—
30	990521	,, dyno to regulator	—	—	1	—
31	858022	,, horn and cut-out button	—	—	1	—
		NACELLE INSTRUMENT PANEL				
32	351584A	Switch, lighting	1	1	—	1
33	351567	Lever and screw, switch	1	1	—	1
34	36129A	Ammeter	1	1	—	1
35	31071A	Button, cut-out	1	1	—	1

SEE SPECIMEN ORDER IN PREFACE

REF. No.	PART No.	DESCRIPTION	5T	6T	TR5	T100
		HANDLEBAR SWITCHES AND PUSH BUTTONS				
1	380056	Switch, dimmer	1	1	—	1
2	31221A	,, ,, ...	—	—	1	—
3	H689	Screw, switch to lever clamp	2	2	—	2
4	76200A	Button, horn push	1	1	—	1
5	76204A	,, ,, ,, and cut-out	—	—	2	—
		HORN				
6	70048D	Horn complete	1	1	1	1
7	701851	Bracket, horn	4	4	—	4
8	F3035	,, ,, (saddle stud fitting)	—	—	1	—
9	700920	,, ,, (angle)	1	1	—	1
10	142689	Screw, horn bracket	2	2	—	2
11	185051	Washer, ,, ,, ...	2	2	—	2
12	DS57	Bolt, horn bracket to lug	2	2	—	2
13	S26-2	Washer, horn ,, ,, ,, ...	2	2	—	2
		BATTERY				
14	PUW7E/4	Battery 6 volt (dry)	1	1	1	1
15	S2263/4	Plug, vent c/w washer	3	3	3	3
		MAGNETO				
16	42111D	Magneto c/w A.T.D.	1	1	—	—
17	42264	Magneto, manual	—	—	1	1
18	458333	Armature assembly	1	1	1	1
19	455361	Slip ring	1	1	1	1
20	189291	Bearing, contact end	1	1	1	1
21	189244	Bearing, drive end	1	1	1	1
22	458339	Condenser assembly	1	1	1	1
23	458619	Cover, contact breaker	1	1	1	1
24	470534	Contact breaker assembly	1	1	1	1
25	122160	Screw, contact breaker fixing	1	1	1	1
26	470609	Contact set	1	1	1	1
27	470688	Spring set, actuating	1	1	1	1
28	470537	Brush and spring C.B. earth	1	1	1	1
29	127124	Screw C.B. end, countersunk head	1	1	1	1
30	185307	Washer, C.B. end	1	1	1	1
31	458355	,, ,, ,, end plate shim	1	1	1	1
32	458356	,, ,, ,, ...	1	1	1	1
33	458389	Cam assembly	1	1	—	—
34	458725	,, ,, ...	—	—	1	1
35	458633	End plate assembly	1	1	—	—
36	458726	,, ,, ,, ...	—	—	1	1
37	451379	Cup, bearing insulating	2	2	2	2
38	455191	Brush, spring and holder (magneto end) ...	1	1	1	1
39	455190	Brush and spring	1	1	1	1
40	458370	Spring pin, pick up fixing	2	2	2	2

APPLY TO LUCAS SERVICE DEPOTS FOR REPLACEMENT UNITS

REF. No.	PART No.	DESCRIPTION	5T	6T	TR5	T100
1	459002	Seal, rubber oil	1	1	1	1
2	458368	Pick up with brush and spring (LH)	1	1	1	1
3	458367	,, ,, ,, ,, ,, (R/H)	1	1	1	1
4	451260	Brush and spring, pick up	2	2	2	2
5	47502A	Auto timing device	1	1	1	1
6	498157	Spring, A.T.D.	2	2	2	2
7	463107	Control parts set (manual)	—	—	1	1
8	454475	Cap, control (rubber)	—	—	1	1
9	415116	Spanner and point gauge	1	1	1	1
10	E2415	Clip H.T. lead	1	1	1	1

APPLY TO ACCESSORY MANUFACTURERS FOR SERVICE UNITS

ENGINE REVOLUTIONS PER MINUTE

GEAR RATIO

M.P.H.	4.4	4.57	4.78	5.0	5.24	5.5	5.7	5.8	6.0	6.25	6.5	6.9	7.06	7.14	7.5	8.0	8.85	9.8	10.6	11.58	12.2	13.9	14.3	15.25	16.0	17.8	18.85
20	1144	1188	1244	1300	1364	1428	1480	1508	1560	1624	1688	1796	1836	1856	1948	2080	2300	2548	2756	3012	3172	3612	3720	3964	4160	4628	4900
25	1430	1485	1555	1625	1705	1785	1850	1885	1950	2030	2110	2245	2295	2320	2435	2600	2875	3185	3445	3765	3965	4515	4650	4955	5200	5785	6125
30	1716	1782	1866	1950	2046	2142	2220	2262	2340	2435	2532	2694	2754	2784	2922	3120	3450	3822	4134	4518	4758	5418	8055	5946	6240	6942	—
35	2002	2079	2177	2275	2387	2499	2590	2639	2730	2842	2954	3143	3213	3248	3409	3640	4025	4459	4823	5271	5551	6321	6510	6937	—	—	
40	2288	2376	2488	2600	2728	2856	2960	3016	3120	3248	3376	3592	3672	3712	3896	4160	4600	5096	5512	6024	6344						
45	2574	2673	2799	2925	3069	3213	3330	3393	3510	3554	3798	4041	4131	4176	4383	4680	5175	5733	6201	6777	7137						
50	2860	2970	3110	3250	3410	3570	3700	3770	3900	4060	4220	4490	4590	4640	4870	5200	5750	6370	6890								
55	3146	3267	3421	3575	3751	3927	4070	4147	4290	4466	4642	4939	5049	5104	5357	5720	6325	7007									
60	3432	3564	3732	3900	4092	4284	4440	4524	4680	4872	5064	5388	5508	5568	5844	6240	6900										
70	4004	4158	4354	4550	4774	4998	5180	5278	5460	5684	5908	6286	6426	6496	6331	6760											
80	4576	4752	4976	5200	5456	5712	5920	6032	6240	6496	6752	7184	7344	7424													
90	5148	5346	5598	5850	6138	6426	6660	6786	7020	7308																	
100	5720	5940	6220	6500	6820	7140	7400	7540																			
110	6292	6534	6842	7150	7502	7854																					

NOTE.—Engine R-P-M are calculated in conjunction with 3.50 × 19 Rear tyre equipment—780 R-P-Mile—and will deviate slightly from above figures for models not so equipped.

4.00 × 18 Rear Tyre 785 R-P-Mile. 3.25 × 19 Rear Tyre 793 R-P-Mile. 4.00 × 19 Rear Tyre 756 R-P-Mile.

GEAR RATIOS

GEARS	STANDARD RATIO				WIDE RATIO				CLOSE RATIO			
Engine Sprocket	Top	3rd	2nd	1st	Top	3rd	2nd	1st	Top	3rd	2nd	1st
17	6.46	7.7	10.94	15.8	6.46	9.22	14.30	18.85	6.46	7.06	8.42	11.00
18	6.10	7.28	10.32	14.9	6.10	8.70	13.50	17.80	6.10	6.66	7.95	10.40
19	5.80	6.9	9.8	14.15	5.80	8.25	12.80	16.85	5.80	6.32	7.54	9.84
20	5.50	6.55	9.3	13.4	5.50	7.84	12.18	16.0	5.50	6.00	7.15	9.35
21	5.24	6.24	8.85	12.8	5.24	7.46	11.58	15.25	5.24	5.72	6.81	8.90
22	5.00	5.95	8.45	12.2	5.00	7.13	11.05	14.55	5.00	5.45	6.50	8.50
23	4.78	5.69	8.09	11.69	4.78	6.82	10.60	13.90	4.78	5.23	6.23	8.12
24	4.57	5.45	7.75	11.2	4.57	6.54	10.14	13.35	4.57	5.00	5.96	7.78
25	4.40	5.24	7.45	10.75	4.40	6.26	9.73	12.80	4.40	4.80	5.73	7.46
Gearbox Reduction	1.0	1.19	1.69	2.44	1.00	1.425	2.21	2.915	1.00	1.09	1.30	1.695

British Only

MOTORCYLES AND PARTS INC.

32451 PARKLANE ST.
GARDEN CITY, MI 48135 USA

WWW.BRITISHONLY.COM
INFO@BRITISHONLY.COM

RETAIL: 1-800-278-6659 ***WHOLESALE: 1-800-852-9253*** ***FAX: 1-734-422-9253***

WORLDS LARGEST SELECTION OF FACTORY ORIGINAL NEW AND USED PARTS

45,000 SQ. FT. OF MOTORCYLE PARTS & ACCESSORIES FROM 1911 TO 1984 FOR ALL BRITISH MAKES!
CASH FOR ALL BRITISH BIKES, PARTS AND LITERATURE

SPECIALIZING IN
VINTAGE MOTORCYLCE PARTS

TRIUMPH
Norton
BSA

THE BIGGEST!

ENGINE REBUILDING PARTS
GASKET - SEALS - BEARINGS
BUSHINGS - PISTONS - RINGS
CLUTCHES - TUNE UP PARTS
SPEED EQUIPMENT

THE BEST!

STOCK AND CUSTOM PARTS
SEATS - HANDLEBARS - CHAINS
TIRES - TUBES - EXHAUST PIPES
MUFFLERS - GAS TANKS - FENDERS
RESTORATION PARTS

THE ONLY!

Central Wheel Components · Barnett Clutches & Cables · Classic Transfers Robert Derrick Ltd · Renold · Lucas · Amal · Emgo Your Powersport Supplier · Brituro England · JP Pistons · Hastings · UH

VELOCETTE • ANDOVER NORTON • TEC • HAYNES • P&P SEATING • WASSELL • MORGO
ALPHA BEARINGS • M.A.C. PRODUCTS • JOE HUNT MAGNETOS • J.J. CABLES • BUCHANAN'S
L.A. SLEEVE • MEGACYCLE CAMS • T.J. WASSELL LIMITED • SUDCO INTERNATIONAL
ACE CLASSICS LONDON • CLASSIC GASKETS • BRITISH WIRING • PBM ENGINEERING
TRI-COR ENGLAND • LEAK PROOF SEALS • MCA (ASTON) LIMITED • GARDNER - WESTCOTT

WE ACCEPT VISA - MASTERCARD - DISCOVER - AMERICAN EXPRESS

PARTS SHIPPED WORDLWIDE !!! VISA · MasterCard · Discover · American Express

VISIT OUR EBAY STORE
http://stores.ebay.com/British-Only-Motorcycles-And-Parts

British Only

MOTORCYLES AND PARTS INC.

32451 PARKLANE ST.
GARDEN CITY, MI 48135 USA

WWW.BRITISHONLY.COM
INFO@BRITISHONLY.COM

RETAIL: 1-800-278-6659 ***WHOLESALE: 1-800-852-9253*** ***FAX: 1-734-422-9253***

WORLDS LARGEST SELECTION OF FACTORY ORIGINAL NEW AND USED PARTS

45,000 SQ. FT. OF MOTORCYLE PARTS & ACCESSORIES FROM 1911 TO 1984 FOR ALL BRITISH MAKES!
CASH FOR ALL BRITISH BIKES, PARTS AND LITERATURE

SPECIALIZING IN
VINTAGE MOTORCYLCE PARTS

TRIUMPH
Norton
BSA

THE BIGGEST!

ENGINE REBUILDING PARTS
GASKET - SEALS - BEARINGS
BUSHINGS - PISTONS - RINGS
CLUTCHES - TUNE UP PARTS
SPEED EQUIPMENT

THE BEST!

STOCK AND CUSTOM PARTS
SEATS - HANDLEBARS - CHAINS
TIRES - TUBES - EXHAUST PIPES
MUFFLERS - GAS TANKS - FENDERS
RESTORATION PARTS

THE ONLY!

Central Wheel Components · Barnett Clutches & Cables · Classic Transfers Robert Derrick Ltd · Renold · Lucas · Amal · Emgo Your Powersport Supplier · Brituro England · JP Pistons · Hastings · UH

VELOCETTE • ANDOVER NORTON • TEC • HAYNES • P&P SEATING • WASSELL • MORGO
ALPHA BEARINGS • M.A.C. PRODUCTS • JOE HUNT MAGNETOS • J.J. CABLES • BUCHANAN'S
L.A. SLEEVE • MEGACYCLE CAMS • T.J. WASSELL LIMITED • SUDCO INTERNATIONAL
ACE CLASSICS LONDON • CLASSIC GASKETS • BRITISH WIRING • PBM ENGINEERING
TRI-COR ENGLAND • LEAK PROOF SEALS • MCA (ASTON) LIMITED • GARDNER - WESTCOTT

WE ACCEPT VISA - MASTERCARD - DISCOVER - AMERICAN EXPRESS

PARTS SHIPPED WORDLWIDE !!! VISA · MasterCard · Discover · American Express

VISIT OUR EBAY STORE
http://stores.ebay.com/British-Only-Motorcycles-And-Parts

British Only

MOTORCYCLES AND PARTS INC.
32451 PARKLANE ST
GARDEN CITY, MI 48135 USA
PHONE: **800-278-6659**
FAX: **734-422-9253**

Year:	Make:	Model:
Engine #		
Frame #		

WWW.BRITISHONLY.COM
INFO@BRITISHONLY.COM

Quantity	Part #	Description	Each	Amount

Date _____ / _____ / _____ **Customer #** _____ **Salesperson** _____

Card Number _____ **Expires** _____

Name _____

Address _____

City/State/Zip _____

Phone _____ / _____ **Fax** _____

Email _____

Signature _____

Subtotal	
Insurance	
Shipping	
Total	
Michigan Residents Add 6% Sales Tax	
Amount Enclosed	

FOLD

Name _____

Address _____

City _____

State _____ Zip _____

USE
FIRST CLASS
LETTER
POSTAGE

British Only

MOTORCYCLES AND PARTS INC.

32451 PARKLANE ST
GARDEN CITY, MI 48135 USA

FOLD

British Only

MOTORCYCLES AND PARTS INC.
32451 PARKLANE ST
GARDEN CITY, MI 48135 USA
PHONE: **800-278-6659**
FAX: **734-422-9253**

Year:	Make:	Model:
Engine #		
Frame #		

WWW.BRITISHONLY.COM
INFO@BRITISHONLY.COM

Quantity	Part #	Description	Each	Amount

Date _____ / _____ / _____ **Customer #** _____ **Salesperson** _____

Card Number _____ **Expires** _____

Name _____

Address _____

City/State/Zip _____

Phone _____ / _____ **Fax** _____

Email _____

Signature _____

Subtotal	
Insurance	
Shipping	
Total	
Michigan Residents Add 6% Sales Tax	
Amount Enclosed	

FOLD

Name _____

Address _____

City _____

State _____ Zip _____

USE
FIRST CLASS
LETTER
POSTAGE

British Only

MOTORCYCLES AND PARTS INC.

32451 PARKLANE ST
GARDEN CITY, MI 48135 USA

FOLD