20-10-1931

BSA SPARES

1954/7

350 c.c. and 500 c.c.

Single Cylinder

O.H.V. Models

1954/7 Models

B 31 . . . 350 c.c. O.H.V. Rigid and Spring Frame

B 32 . . . 350 c.c. O.H.V. Competition, Rigid Frame

B 33 . . . 500 c.c. O.H.V. Rigid and Spring Frame

B 34 . . . 500 c.c. O.H.V. Competition, Rigid Frame

B 31 . . . 350 c.c. O.H.V. Swinging Arm

B 32 . . . 350 c.c. O.H.V. Competition, Swinging Arm

B 33 . . . 500 c.c. O.H.V. Swinging Arm

B 34 . . . 500 c.c. O.H.V. Competition, Swinging Arm

British Only

MOTORCYLES AND PARTS INC.

32451 PARKLANE ST.
GARDEN CITY, MI 48135 USA

WWW.BRITISHONLY.COM
INFO@BRITISHONLY.COM

RETAIL: 1-800-278-6659 ***WHOLESALE: 1-800-852-9253*** ***FAX: 1-734-422-9253***

WORLDS LARGEST SELECTION OF FACTORY ORIGINAL NEW AND USED PARTS

45,000 SQ. FT. OF MOTORCYLE PARTS & ACCESSORIES FROM 1911 TO 1984 FOR ALL BRITISH MAKES!
CASH FOR ALL BRITISH BIKES, PARTS AND LITERATURE

SPECIALIZING IN
VINTAGE MOTORCYLCE PARTS

TRIUMPH
Norton
BSA

THE BIGGEST!

ENGINE REBUILDING PARTS
GASKET - SEALS - BEARINGS
BUSHINGS - PISTONS - RINGS
CLUTCHES - TUNE UP PARTS
SPEED EQUIPMENT

THE BEST!

STOCK AND CUSTOM PARTS
SEATS - HANDLEBARS - CHAINS
TIRES - TUBES - EXHAUST PIPES
MUFFLERS - GAS TANKS - FENDERS
RESTORATION PARTS

THE ONLY!

Central Wheel Components · Barnett Clutches & Cables · Classic Transfers Robert Derrick Ltd · Renold · Lucas · Amal · Emgo Your Powersport Supplier · Brituro England · JP Pistons · Hastings · UH

VELOCETTE • ANDOVER NORTON • TEC • HAYNES • P&P SEATING • WASSELL • MORGO
ALPHA BEARINGS • M.A.C. PRODUCTS • JOE HUNT MAGNETOS • J.J. CABLES • BUCHANAN'S
L.A. SLEEVE • MEGACYCLE CAMS • T.J. WASSELL LIMITED • SUDCO INTERNATIONAL
ACE CLASSICS LONDON • CLASSIC GASKETS • BRITISH WIRING • PBM ENGINEERING
TRI-COR ENGLAND • LEAK PROOF SEALS • MCA (ASTON) LIMITED • GARDNER - WESTCOTT

WE ACCEPT VISA - MASTERCARD - DISCOVER - AMERICAN EXPRESS

PARTS SHIPPED WORDLWIDE !!! VISA · MasterCard · Discover · American Express

VISIT OUR EBAY STORE
http://stores.ebay.com/British-Only-Motorcycles-And-Parts

British Only

MOTORCYLES AND PARTS INC.

32451 PARKLANE ST.
GARDEN CITY, MI 48135 USA

WWW.BRITISHONLY.COM
INFO@BRITISHONLY.COM

RETAIL: 1-800-278-6659 ***WHOLESALE: 1-800-852-9253*** ***FAX: 1-734-422-9253***

WORLDS LARGEST SELECTION OF FACTORY ORIGINAL NEW AND USED PARTS

45,000 SQ. FT. OF MOTORCYLE PARTS & ACCESSORIES FROM 1911 TO 1984 FOR ALL BRITISH MAKES!
CASH FOR ALL BRITISH BIKES, PARTS AND LITERATURE

SPECIALIZING IN
VINTAGE MOTORCYLCE PARTS

TRIUMPH
Norton
BSA

THE BIGGEST!

ENGINE REBUILDING PARTS
GASKET - SEALS - BEARINGS
BUSHINGS - PISTONS - RINGS
CLUTCHES - TUNE UP PARTS
SPEED EQUIPMENT

THE BEST!

STOCK AND CUSTOM PARTS
SEATS - HANDLEBARS - CHAINS
TIRES - TUBES - EXHAUST PIPES
MUFFLERS - GAS TANKS - FENDERS
RESTORATION PARTS

THE ONLY!

Central Wheel Components · Barnett Clutches & Cables · Classic Transfers Robert Derrick Ltd · Renold · Lucas · Amal · Emgo Your Powersport Supplier · Brituro England · JP Pistons · Hastings · UH

VELOCETTE • ANDOVER NORTON • TEC • HAYNES • P&P SEATING • WASSELL • MORGO
ALPHA BEARINGS • M.A.C. PRODUCTS • JOE HUNT MAGNETOS • J.J. CABLES • BUCHANAN'S
L.A. SLEEVE • MEGACYCLE CAMS • T.J. WASSELL LIMITED • SUDCO INTERNATIONAL
ACE CLASSICS LONDON • CLASSIC GASKETS • BRITISH WIRING • PBM ENGINEERING
TRI-COR ENGLAND • LEAK PROOF SEALS • MCA (ASTON) LIMITED • GARDNER - WESTCOTT

WE ACCEPT VISA - MASTERCARD - DISCOVER - AMERICAN EXPRESS

PARTS SHIPPED WORDLWIDE !!! VISA · MasterCard · Discover · American Express

VISIT OUR EBAY STORE
http://stores.ebay.com/British-Only-Motorcycles-And-Parts

CATALOGUE OF

ISSUED BY

BSA MOTOR CYCLES LTD.

Service Department

MONTGOMERY STREET
BIRMINGHAM 11

TELEPHONE . . BIRMINGHAM, VICTORIA 2234 (6 lines)
TELEGRAMS . . . . . "SELSERV," BIRMINGHAM

All communications relating to Spare Parts or Repairs to B.S.A. Motor Cycles should be addressed to the above.

B.S.A. MOTOR CYCLES LTD.

Registered Offices and Works . . . ARMOURY ROAD, BIRMINGHAM, 11

Telephones: BIRMINGHAM VICTORIA 2381 (30 lines) *Telegrams and Cables:* "SELMOTO, BIRMINGHAM"

Contractors to Her Majesty's Government, the War Office, the Admiralty, the Post Office, the Colonial and Foreign Governments

Copyright B.S.A. Co. Ltd.

MC. 971-2½ (Export)

Printed in England.

Distributors
Engine
Gearbox
Clutch and Front Chaincase
Frame and Fittings
Front Fork and Fittings
Front Hub and Wheel Fittings
Rear Hub and Wheel Fittings
Mudguards Chainguard Toolbox etc.
Mudguards Chainguard Oil Tank etc.
Mudguards Oil Tank and Rear Chainguard
Mudguards Chainguard Handrail etc.
Petrol Tank Handlebar Rear Brake
Handlebar Petrol Tank Dual Seat etc.
Petrol Tank Front Mudguard
Safety Bars Carrier Handrail
Lephields
Tools and Sundries
Electrical Equipment
Carrier and Panniers

GENERAL INDEX

	Pages
Air Cleaners	38, 46
Battery Carrier	46, 91
Carburetters	113
Carrier	31, 41, 97
Carrier for use with Panniers	109
Central Stand	39, 47
Chainguards	71, 73, 77, 79, 83
Clutch and Front Chaincase	31-36
Colour Finishes	3
Dual Seat and Fittings	89, 92
Engine and Frame Markings	112
Engine (General)	10-22
Equipment (Electrical)	105
Exhaust Pipes	10, 16
Footrests	38, 41, 49
Frame and Fittings	38-47
Front Fork and Fittings	51-56
Front Hub and Wheel Fittings	56-61
Gearbox and Control Parts	23-31
Guarantee	4
Handlebars and Controls	87, 89, 92
Handrail	83, 97
Index (Numerical)	115–135
Legshields	101
Legshields and Front Safety Bars	101
Mudguards and Fittings	71, 73, 77, 79, 83, 92
Oil Tank and Fittings	73, 77, 79
Overseas Distributors	5-8
Petrol Tank and Fittings	87, 89, 92
Pillion Footrests	38, 39, 47
Pistons	114
Prop Stand	39, 43, 47
Rear Brake Control	87
Rear Hub and Wheel Fittings	61-71
Rear Suspension	39-41, 47-49
Safety Bars	97
Silencer and Fittings	71, 73, 77, 83
Standard Bolts and Nuts	110
Standard Washers	111
Toolbox and Fittings	71, 73, 77, 92
Tools and Sundries	103

SUFFIX NUMBERS TO BE USED TO IDENTIFY VARYING FINISHES FOR "B" GROUP MODELS

/1 Cadmium.

/2 Dull Chrome.

/3 Bright Chrome.

/6 Rustproof Black.

/7 Black Enamel.

/19 Chrome Plate and Matt Silver, lined Red.

/21 Polished Aluminium.

/36 Chrome Plate and Maroon, lined Gold.

/37 Maroon.

/41 Chrome Plate and Maroon.

/44 Chrome Plate and Black.

When ordering components with varying finishes—i.e., petrol tanks, wheels, rims, etc.—please state finish required by adding the appropriate suffix number to the part number.

EXAMPLE. B31 Petrol Tank.

Maroon, Chrome, lined Gold, 65–8222/36

SPARKING PLUGS

Champion Sparking Plugs Ltd., Feltham, Middlesex.

ELECTRICAL EQUIPMENT

J. Lucas Ltd., Great King Street, Birmingham.

SPEEDOMETERS

Smiths Motor Accessories, Cricklewood Works, London.

COPY OF B.S.A. MOTOR CYCLE SPARE PARTS GUARANTEE

We give the following guarantee with B.S.A. Motor Cycle Spare Parts, instead of the guarantee implied by statute or otherwise, as to the quality or fitness of such parts for the purpose for which they are intended, any such implied guarantee being in all cases excluded, nor can any claim for consequential damages be entertained.

WE GUARANTEE, subject to the conditions mentioned below, that all precautions which are usual and reasonable have been taken by us to secure excellence of materials and workmanship, but this guarantee is to extend and be in force for six months only from the date of purchase, and the damages for which we make ourselves responsible under this guarantee are limited to the replacement of any part which may have proved defective.

WE UNDERTAKE, subject to the conditions mentioned below, to make good at any time within six months any defects in these respects. As motor cycles are easily liable to derangement by neglect or misuse, this guarantee does not apply to defects caused by wear and tear, misuse, or neglect. The term "misuse" shall include among others the following acts: The attaching of a sidecar to the motor cycle in such a manner as to cause damage or calculated to render the latter unsafe when ridden; the use of a motor cycle or a motor cycle and sidecar combined when carrying more persons or a greater weight than they were designed to bear. (The 350 c.c. and the 500 c.c. in the "B" group of machines are not designed for sidecar work).

TO MAINTAIN THE ORIGINAL RELIABILITY AND PERFORMANCE OF YOUR B.S.A. MOTOR CYCLE FIT ONLY SPARES MADE BY B.S.A.

ALWAYS USE

GENUINE BSA SPARES

B.S.A. OVERSEAS DISTRIBUTORS

ADEN	Arabian Trading Co., Maalla Garage, Aden.
AFGHANISTAN ...	Levetus Ltd., 194, Bishopsgate, London, E.C.2.
ALASKA	Hap Alzina, 3074, Broadway, Oakland 11, California, U.S.A.
ALGERIA	Movea, 79, Ave. de la Grande Armee, Paris XVI, France, operating through : Societe Algerienne de Distribution d' Equipements Britanniques, 1, rue d' Assus Alger, Algiers.
ARGENTINA ...	Ditlevsen & Cia Ltda., Av. Ingeniero Huergo 1335, Buenos Aires.
AUSTRALIA	
South Australia ...	J. N. Taylor & Co., 121/5, Grenfell St., Adelaide.
Victoria	Finlay Bros. (Pty) Ltd., 316/20, Elizabeth St., Melbourne C.1.
West Australia ...	Mortlock Bros., 914, Hay Street, Perth.
N.S.W. and Queensland ...	Bennett & Wood Ltd., Cor. Bathhurst and Pitt Sts., Sydney and 128, Wickham St., Valley, Brisbane.
Tasmania	Sim King (Pty) Ltd. (Box A. 240G G.P.O.), 63, Brisbane Street, Launceston.
AUSTRIA	A.u.R. Hinteregger, Johnstrasse 31, Vienna XV.
AZORES	Hayes & Travell Ltd., P.O. Box 56, Ponta Delgada, St. Michael's.
BAHAMAS	Nassau Bicycle Co., P.O. Box 191, Nassau.
BAHREIN	United Commercial Agencies, P.O. Box 166, Bahrein Islands, Persian Gulf.
BELGIAN GONGO.	
Albertville ...	La Sima S.C.R.L., P.O. Box 671, Elizabethville.
Bukavu	Touriel Motors, P.O. Box 796, Bukavu.
Goquilhatville ...	Ets. Fr. Mechant et Fils, P.O. Box 786, Leopoldville.
Elizabethville ...	La Sima, Boite Postale 671, Elizabethville.
Leopoldville ...	Ets. Fr. Mechant et Fils, P.O. Box 786, Leopoldville.
Usumbura ...	Capelluto Touriel & Co., P.O. Box 501, Usumbura, Ruanda Urundi.
Stanleyville ...	Nassers Trading Co. Ltd., P.O. Box 71.
BELGIUM	Famo S.A., 571, Grande Chaussée, Berchem, Antwerp.
BERMUDA	Holmes, Williams & Purvey, Ltd., P.O. Box 444, Pembroke.
BOLIVIA	Balfour Williamson Merchant Shippers Limited, 7, Gracechurch St., London, E.C.3, operating through : Gibbs Williamson (Bolivia) Ltda., Casilla 957, La Paz.
BORNEO.	
Br. N. Borneo ...	Harrisons & Crosfield (Borney) Ltd., Import Dept., Jesselton.
Sarawak	The Borneo Co. Ltd. (P.O. Box 141), Thomson Road, Kuching.
BOUGAINVILLE ...	Bennett & Wood Ltd., Corner Pitt and Bathurst Streets, Sydney, N.S.W., Australia.
BRAZIL	Mesbla S.A., Rua de Passeio 48/54, Rio ee Janeiro.
and branches at ...	Sao Paulo (Est. de Sao Paulo)—Rua 24 de Maio, 141.
BRAZIL	Porto Alegre (R.G. do Sul)—Rua Voluntarios de Patria 524. Belo Horizonte (Minas Gerais)—Rua Curitiba, 444-464. Recife (Pernambuco)–Rua da Palma 251. Pelotas (R.G. do Sul)—Praca Cel. P. Osorio, 152-154. Niteroi (Est. do Rio)—Rua Visconde Rio Branco 521-523. Marilia (Sao Paulo)—Rua 9 de Julho 1001. Victoria (Espirato Santo)—Av. Victoria 719-727. Salvador (Babia)—Av. Frederico Pontes, 102-104.
BRITISH E. AFRICA.	
Kenya	Uganda Co. (Africa) Ltd., P.O. Box 1, Kampala, Uganda.
Tanganyika ...	International Motor Mart Ltd., P.O. Box 409, Dar-es-Salaam.
Uganda	The Uganda Co. (Africa) Ltd., P.O. Box 1, Kampala.
Zanzibar	Musa Jusabani, P.O. Box 366, Zanzibar.
BRITISH GUIANA	Bookers Stores Ltd., 49/53, Water St., Georgetown.
BRITISH HONDURAS	C. Melhado & Sons, Belize.
BRITISH SOMALILAND	Arabian Trading Co., Berbera.
BRITISH W. AFRICA.	
Gambia	Cie. F.A.O., Bathurst.
Ghana	Cie. F.A.O., P.O. Box 70, Accra.
Nigeria	Cie. F.A.O., P.O. Box 160, Lagos.
Sierra Leone ...	Cie. F.A.O., Freetown.
(and other branches throughout territory)	
BRITISH W. INDIES	
Antigua	Stephen R. Mendes Ltd., Colonial
Leeward Is. ...	House, 18, Thames St., St. John's.
Barbados	Redman & Taylors Garage Ltd., P.O. Box 269, Church Street, Bridgetown.
Dominica	A. C. Shillingford & Co., P.O. Box
Leeward Is. ...	123, The Garage, Roseau.
Grenada	Glean's Garage, St. Patricks.
Windward Is. ...	
Jamaica	B.S.A. Agency Ltd., 9, King Street, Kingston.
St. Kitts	J. W. Thurston & Co. Ltd., Fort St.,
Leeward Is. ...	Basseterre.
St. Lucia	Peter & Co., Castries.
Windward Is. ...	
Montserrat ...	M. S. Osborne, Trescellian House.
Leeward Is. ...	
Nevis	J. W. Thurston & Co. Ltd., Fort St.,
Leeward Is. ...	Basseterre, St. Kitts.
St. Vincent ...	The Caribbean Trading Co., P.O.
Windward Is. ...	Box 27, Kingstown.
Trinidad	Sports & Games Ltd. (P.O. Box 271), 28, Henry Street, Port of Spain.
BURMA	Levetus Limited, 194, Bishopsgate, London, E.C.2, operating through : Fairweather Richards & Co. Ltd., 67/69, Lewis St., Rangoon.
CANADA.	
British Columbia and Alberta	Fred Deeley Ltd., 606, E. Broadway Ave., Vancouver.
Newfoundland ...	Edwin Murray Ltd., 256, Water Street, St. John's.
Nova Scotia ...	Mr. L. C. Comeau, Comeauville, Nova Scotia.

CANADA.	
Ontario	Brown's Sports & Cycle Co. Ltd., 343, Yonge St., Toronto.
Quebec	Arlington Cycle & Sports Ltd., 1194, University St., Montreal.
Saskatchewan ...	Nicholson Bros., 245, Second Ave. North, Saskatoon.
CANARY ISLANDS	J. Gonzalez Suarez (Apartado, No.9), Puerto de la Luz, Las Palmas.
CEYLON	Cargills (Ceylon) Ltd., Fort, Colombo. P.O. Box 23.
CHILE	Balfour Williamson Merchant Shippers Limited, 7, Gracechurch St., London, E.C.3, operating through: Williamson Balfour & Co. S.A., Santiago.
COOK ISLANDS ...	United Island Traders Ltd. (W. H. Watson), Raratonga.
COLOMBIA ...	Balfour Williamson Merchant Shippers Limited, 7. Gracechurch St., London, E.C.3, operating through: Tracey & Co. S.A., Apartado 1196, Bogota.
COSTA RICA ...	Tiberio Paganella, Ciclo Sport La Casa del Ciclista, Apartado 2321, San Jose.
CUBA	Distribudora de Motocicletas Britanicas, S.A. Padre Varela, Havana, Cuba, P.O. Box 962.
CYPRUS	B. C. Petrides & Co., P.O. Box 91, 7, Kyrenia Street, Nicosia.
CYRENAICA ...	Metcalfe Eng. Co. Ltd., P.O. Box 216, Benghazi.
CZECHOSLOVAKIA	Gorma Ltd., 70, Pall Mall, London S.W.1.
DENMARK	B.S.A. Motors & Cycles (H. V. Hansen), G1, Kongevej 127-131, Copenhagen, V.
DOMINICAN REPUBLIC	General Sales Co., Apartado 746 Ciudad Trujillo, R.D.
DUTCH GUIANA ...	The New Motor Supply & Importing Co. (P.O. Box 422), Watermolen St., Paramaribo.
ECUADOR	Balfour Williamson Merchant Shippers Limited, 7, Gracechurch St., London, E.C.3, operating through: Sociedad Anonima Comercial, Anglo-Ecuatoriana, Apartado 410, Guayaquil.
EGYPT	T. W. M. Forsyth, 7 Sharia Maspero, Cairo.
ERITREA	Arabian Trading Co. Ltd., Viale Blattenchieta Lorenzo Tazaz, 29-33, Asmara.
ETHIOPIA	Arabian Trading Co. (P.O. Box 23), 155, Cunningham Street, Addis Ababa.
FALKLAND ISLANDS	The Falkland Island Co. Ltd., Port Stanley. McAtasney & Sedgwick, Falkland Store, Stanley.
FAROE ISLANDS	Charles Smith, Trondargoth 35, Tnorshann, Faroe Islands.
FIJI	Morris Hedstrom Ltd., Suva.
FINLAND	S. & N. Osakeyhtio, Nestlanadgaten 19, Elsinfors.
FRANCE	Movea S.A., 79, Ave. de la Grande Armée, Paris XVIe.
FR. ANTILLES	
Guadeloupe ...	Maison F. D'Alexis 44, Rue Frebault, Pointe-a-Pitre.
FRENCH EQ. AFRICA	The United Africa Co., Unilever House, Blackfriars, E.C.4.
FRENCH INDIA ...	Levetus Ltd., 194, Bishopsgate, London, E.C.2.
FRENCH INDO CHINA	Movea S.A., 79, Ave. de la Grande Armée, Paris XVIe, France.
FRENCH MOROCCO	African and Eastern (Near East) Lts., P.O. Box 519, Casablanca.
FRENCH SOMALILAND	Arabian Trading Co., Djibouti.
FRENCH W. AFRICA	
Dahomey	Cie. F.A.O., Service Autos, Cotonou.
French Cameroons	Cie. F.A.O., Duala.
Ivory Coast ...	Cie. F.A.O., Abidjan.
Mauritania ...	The United Africa Co., Unilever House, Blackfriars, E.C.4., operating through: Compagnie Du Niger Francais, Boite Postale No. 230, Saint-Louis, Senegal.
French Guinea ...	Cie. du Niger Français, Conakry.
French Sudan ...	Cie. du Niger Français, Bamako.
Senegal	Nouvelle Societé Commerciale Africaine, 31 Boulevard Pinet-Laprade, Dakar.
GERMANY (West) ...	Aschoff & Co., C.M.B.H. Oppumer Strasse 67/69, Krefeld.
(East) ...	Gorma Lrd., 70, Pall Mall, London, S.W.1.
GIBRALTAR ...	English Garage Ltd., Queensway, Gibraltar.
GILBERT and ELLICE ISLANDS	Morris Hedstrom Ltd., Apia, Samoa.
GREECE	D. F. Papoutsas, 56, Chalcocondillis St., Athens.
GUADELOUPE ...	Maison F. D'Alexis, 44, Rue Frebault, Pointe-à-Pitre.
GUATEMALA ...	H. J. Nicol & Co. S.C., 8A Avenida Sur No. 109, Guatemala City.
HADRAMUT ...	Arabian Trading Co., Esplanade, Aden.
HAITI	Yves Bajeux, Grande Rue 185, (P.O. Box 856), Port-au-Prince. Gustave & Mastroti, Rues 12B, Caphaitien.
HAWAII ISLANDS	Schubert's Cyclery Stores (P.O. Box 3443), Cor. Archer and South King Sts., Honolulu, Hawaii.
HONDURAS ...	M. Liebers, Apartado 51, Tegucigalpa, D.C.
HONG KONG ...	Levetus Limited, 194, Bishopsgate, London, E.C.2, operating through: British Bicycle Co., 16, Hennessy Road.
HUNGARY	Gorma Ltd., 70, Pall Mall, London, S.W.1.
ICELAND	Falkinn Ltd., P.O. Box 997, Rejkjavik.
INDIA	Levetus Limited, 194, Bishopsgate, London, E.C.2, and branches in Delhi, Bombay and Calcutta, operating through:
Bombay	Noble Cycle & Motor Co., 225, Hornby Rd., Fort, Bombay.
Calcutta	Bentinck Cycle Co., 1/2, Chowringhee Rd., Calcutta.
Jullundur	Janki Dass & Sons, Main Street, Jullundur.
Madras	Union Co. (Motors) Ltd., Mount Rd., Madras.

INDIA	
Jaipur	Tandon Bros., 16, Daryaganj, Delhi 7.
New Delhi ...	Peary Lal & Sons Ltd., Queen's Way, New Delhi.
Delhi	Peary Lal & Sons (E. Punjab) Ltd., Peary Lal Bldg., Kashmere Gate, Delhi 6.
Allahabad	Colonelganj Cycle & Motor Agency, 12 P.D. Tandon Rd., Allahabad.
Ambala	B. K. Mittal & Co., Stafl Rd., Ambala. Cantt.
Kanpur	Calcutta Motor & Cycle Co., 26/51, Birhani Rd., Kanpur.
Cuttack	Pearl Cycle Stores, Naya Serak, Cuttack.
Lucknow	Motor Cycle House, 11, Station Rd., Lucknow.
Dehra Dun ...	Nawal Kishore and Son, 9, Esplanade Road, Delhi, 6.
Nagpur	Bombay Cycle Stores Co. Ltd., Mahal, Nagpur City.
Ranchi	Kedia Cycle Stores, Main Rd., Ranchi.
Jamnagar	Imperial Trading Co., Ranjit Rd., Jamnagar.
Meerut	Mittal Bros., Bombay Bazaar, Meerut.
Hyderabad ...	Sohrab Bros., Troop Bazar, Hyderabad—DN.
INDONESIA ...	Platon Trading Co. Ltd., Postrommel Dak 766, Djakarta-Kota.
IRAQ	Mr. J. A. Noury, 2/111, Rashid Street, Baghdad, Iraq.
IRISH REPUBLIC	Huet Bros. Ltd., 7 & 8, Bachelor's Walk, Dublin, C.9.
ISRAEL	S. Gousman & Son Ltd., 16, Hakishon St., Tel-Aviv.
ITALIAN SOMALILAND	Arabian Trading Co., Esplanade, Aden.
ITALY (North) ...	Ve Ba & C, Via Cenisio 4, Milan.
(South) ...	Anglitalia S.P.A., Via Lazio 22, Rome.
JAPAN	Balcom Trading Co. Inc., Fukoku BuildingNo.1,2-ChomeUchisaiwai-Cho, Chiyoda-Ku, Tokyo.
KOREA	Balcom Trading Co. Inc., Fukoku BuildingNo.1,2-ChomeUchisaiwai-Cho, Chiyoda-Ku, Tokyo.
KUWAIT	Abdul Rahman Albisher & Zaid Alkażemi, Kuwait, Persian Gulf.
LEBANON	Associated Commercial Enterprise, P.O. Box 3270, Air Moureisseh, Beirut.
LIECHENSTEIN ...	Fibag, Postfach Zurich 39, Zurich, Switzerland.
LIBERIA	Cie. F.A.O., Monravia.
LIBYA	
Tripolitania ...	F.lli Pagani Soc. Coll. 113, Sciara Mizran, Tripoli.
Cyrenaica	Metcalfe Eng. Co. Ltd., P.O. Box 216, Benghazi.
LUXEMBOURG ...	Famo S.A., 571 Grande Chaussée, Berchem, Antwerp, Belgium.
MADAGASCAR ...	Movea, S.A., 79 Ave. de la Grande Armée, Paris XVIe, France.
MADEIRA	A. Gomez Loja, P.O. Box 53, Funchal.
MALAYA	Cycle & Carriage Co. (1926) Ltd. (P.O. Box 305), Orchard Road, Singapore.
MALTA	G. Anastasi, 27 and 35 opp. St. John's Church, Valletta.
MAURITIUS ...	Lising & Co., 32, Royal St., Port Louis.
MEXICO	Watson Phillips & Cia. Succs. S.A., Apartado Postal No. 67, Mexico 6 D.F.
	Alejandro Domingues Font Calle 60, Num. 536, Merida, Yucatan.
NETHERLANDS ...	Hart Nibbrig & Greeve N.V., Parkstraat 91A, The Hague.
NETHERLANDS ANTILLES (D.W.I.)	Caribbean Sales (P.O. Box 43), Noordstraat No. 543, Orangestad, Aruba.
	Caribbean Sales. P.O. Box 135, Willemstad, Curacao.
NEW BRITAIN ...	Bennett & Wood Pty. Ltd., Corner Pitt and Bathurst Streets, Sydney, N.S.W. Australia.
NEW CALEDONIA	Agence Automobile, Boite Postale 176, Nouméa.
NEW GUINEA ...	Bennett & Wood Ltd., Corner Pitt and Bathurst Streets, Sydney, N.S.W., Australia.
NEW HEBRIDES ...	Bennett & Wood Ltd., Corner Pitt and Bathurst Streets, Sydney, N.S.W., Australia.
NEW IRELAND ...	Bennett & Wood Ltd., Corner Pitt and Bathurst Streets, Sydney, N.S.W., Australia.
NEW ZEALAND ...	Skeates & White Ltd., 48, Fort St., Auckland, C1.
NICARAGUA ...	J. A. Estrada & Cia. Ltda. (Apartado No. 11), Avenida Roosevelt, Managua.
NORWAY	Erling Sande, Grubbegaten 2/4, Oslo.
NYASALAND ...	African Lakes Corp. Ltd., Mandala, Blantyre.
OKINAWA	Balcom Trading Co. Inc., Fukoku BuildingNo.1,2-ChomeUchisaiwai-Cho, Chiyoda-Ku, Tokyo.
PAKISTAN	Levetus Ltd., 194, Bishopsgate, London, E.C.2, and their branches at Karachi and Dacca, operating through :
(WEST)	Shahnawaz Ltd. (P.O. Box 655), Victoria Rd., Karachi.
(EAST)	Crescent Cycle & Motor Co., 161, Nawabpur Rd., Dacca.
PANAMA	Panamusica S.A., P.O. Box 3227, Panama.
PAPUA	Bennett & Wood Ltd., Corner Pitt and Bathurst Streets, Sydney, N.S.W., Australia.
PARAGUAY ...	J. & F. Perez, 14 de Mayo Pte Franco, Asuncion.
PERSIA	H. Mohammed Tavakolipoor, Ave. Boozarjomehri, Tehran.
PERU	Balfour Williamson Merchant Shippers Limited, 7, Gracechurch St., London, E.C.3, operating through :
	Milne & Co. S.A., Apartado 684, Lima.
PHILIPPINES ...	Campos Rueda & Sons, 421/7, Juan Islands, Manilla.
POLAND	Gorma Ltd., 70, Pall Mall, London, S.W.1.
PORTUGAL (North)	Silva Neto & Ca. Lda., Anadia.
(South)	Stand Vidal, Travessa de S. Mamede 23/5, Lisbon.
PORTUGUESE EAST AFRICA	F. L. Simoes & Co., P.O. Box 13, Beira.
	A. A. Azevedo, P.O. Box 482, Lourenco Marques.
	Gordhandas Valabhdas & Filhos, P.O. Box 45, Mozambique.
	Auto Sobressalentes Ltd., P.O. 208, Quelimane.

PORTUGUESE WEST AFRICA ... ... Casa Americana Ltda, Caixa Postal 1208, Luanda.

PORTUGUESE GUINEA
Nunes & Irmao, C.P. 83, Bissau.

PORTUGUESE INDIA
M.S.B. Caculo, Nova Goa.

PUERTO RICO ... M. Castro Fernandez & Co. Ltd., (P.O. Box 1579), San Juan 7. Puerto Rico.

QATAR ... ... Kasem and Abdulla Sons of Darwish Fakhroo, Qatar, Persian Gulf.

REUNION ISLES ... Movea S.A., 79, Avenue de la Grande-Armee, Paris XVIe, France.

RHODESIA (NORTHERN)
Mufulira Motors Ltd., P.O. Box 155, Mufulira, Nth. Rhodesia.
Pals Motors, P.O. Box 51, Lusaka, Northern Rhodesia.
The British Cycle & Sports Co., P.O. Box 274, Livingstone.

RHODESIA (SOUTHERN)
Van Rooyen Motor Cycle Works Ltd. 124, Gray St., Bulawayo, Southern Rhodesia.
Alick Stuart Ltd., P.O. Box 306, Bulawayo, Southern Rhodesia.
Kimpton's (Midlands) Ltd., P.O. Box 91, Gwelo.
Gammon Bros., P.O. Box 151, Umtali.
Johnstons Motor Cycle Supplies (Pvt) Ltd., 28, Pioneer St., Salisbury.

ROUMANIA ... Gorma Ltd., 70, Pall Mall, London, S.W.1.

SALVADOR ... ... La Agencia Nacional Ltda., Avenida Independencia, San Salvador.

SAMOA ... ... Morris Hedstrom Ltd., Apia.

SARAWAK ... ... Borneo Co. Ltd., Sackville House, Fenchurch Street, London, E.C.3.

SAUDI ARABIA ... Ebrahim Abdullah Juffali & Bros., P.O. Box 297, Jeddah.

SEYCHELLES ... Chenard & Co., P.O. Box 5, Mahe.

SOLOMON ISLANDS
Bennett & Wood Ltd., Corner Pitt and Bathurst Streets, Sydney, N.S.W. Australia.

SOUTH W. AFRICA Terry's Motors, P.O. Box 784, Windhoek.

SPAIN ... ... Commercial Yacobi, Piamonte 16, Madrid.

SPANISH GUINEA J. Gonzalez Suarez (Apartado No. 9), Puerto de la Luz, Las Palmas, Canary Islands.

SPANISH MOROCCO
Marrache & Levy, (P.O. Box 132), Casa Riera 26/28, Tangier.

SUDAN ... ... Geo. Djerejian & Sons, P.O. Box 269, Khartoum.

SWEDEN ... ... A-B. E. Fleron, Malmo.

SWITZERLAND ... Fibag, Postfach Zurich 39, Zurich. Van Leisen S.A., 34, Rue de la Synagogue, Geneva.

SYRIA ... ... M. Chafik el Khiami & Co., Rue el Nasr 169, Damascus, Syria.

TAHITI ... ... H. Jean Hamon, Papeete.

TANGIER ... ... Marrache & Levy, (P.O. Box 132), Casa Riera 26/28, Tangier.

THAILAND ... ... Triangle Co. Ltd., (P.O. Box 70), Asdang Rd., Bangkok.

TONGA ... ... E. H. Jones, P.O. Box 34, Nukualofa, Tonga Islands.

TRIPOLITANIA ... F.lli Pagani Soc. Coll., 113, Sciara Mizran, Tripoli, Libya.

TUNISIA ... ... Etabs. Jean Borg, 35, Rue de Marseille, Tunis.

TURKEY ... ... Turkish Automobile Trade Co., Beyoglu Istiklal Caddesi 239 (P.O. Box 32), Beyoglu, Istanbul.

UNION OF SOUTH AFRICA

Cape Province ... Robb Motors Ltd., 102, Strand St., Cape Town, P.O. Box 1100.
Barnes Garage Ltd., P.O. Box 438, East London.
The Union Cycle Works, P.O. Box 442, Kimberley.
Sahds, P.O. Box 149, Queenstown.
Haigh Motors (Pty) Ltd., P.O. Box 1160, Port Elizabeth.

Natal ... ... W. Killerby (Natal) (Pty) Ltd., 281, Umbilo Road, Durban, Natal.
Percy Briggs (Pty.) Ltd., P.O. Box 564, Durban.
Jowett Bros., P.O. Box 201, Pietermaritzburg.

Orange Free State E. Hoehne & Co., P.O. Box 619, Bloemfoentein.

Transvaal ... ... Fisher & Simmons Ltd., 12, Albert Street, Johannesburg.
Shimwell Bros. (Pty) Ltd., P.O. Box 2035, Johannesburg, also at P.O. Box 95, Pretoria.

UNITED STATES OF AMERICA.

East Coast ... B.S.A. Incorporated, 639, Passaic Ave., Nutley 10, New Jersey.

West Coast ... Hap Alzina, 3074 Broadway, Oakland 11, California.

URUGUAY ... ... Linn & Cia. S.A., Casilla Correo 1027, Montevideo.

VENEZUELA ... Agencias B.S.A. de Venezuela C.A. Peligro a Pele el Ojo 24-2, Caracas.
"Casa del Motociclista," (Rafael E. Montero), Calle 89-E No. 3-A-52, Maracaibo, (Zulia and Falcon).

YEMEN ... ... Arabian Trading Co., Esplanade, Aden.

YUGOSLAVIA ... Gorma Ltd., 70, Pall Mall, London, S.W.1.

EVERY OWNER

OF A

B.S.A. MOTOR CYCLE

IS STRONGLY ADVISED

TO BUY ONLY

GENUINE BSA SPARES

WHEN REPLACEMENTS

BECOME NECESSARY

Plate 1

ENGINE

B31 B33 Rigid and Spring
B31 B33 Swinging Arm Frame

Plate Ref. Number.	Models.	Part No.	Description.	Number per set.
1	B31	65–1703	Cylinder barrel	1
1	B33	65–1707	Cylinder barrel	1
2	B31 B33	66–92	Cylinder base washer (1954/5)	1
2	B31 (swinging arm)	66–92	Cylinder base washer (1956)	1
2	B33 (swinging arm)	66–86	Cylinder base washer (1956)	1
3	B31 B33	65–930	Push rod cover stud nut	2
4	B31 B33	29–541	Push rod cover stud nut washer	2
5	B31 B33	24–4227	Push rod cover tube stud	2
6	B31 B33	66–1379	Push rod cover tube washer	1
7	B31 B33	66–1937	Tappet recess cover washer	1
8	B31 B33	66–1936	Tappet recess cover	1
9	B31 B33	29–2158	Tappet recess cover screw	4
10	B31 B33	66–115	Cylinder holding down bolt	4
11	B31 B33	65–1084	Push rod	2
12	B31 B33	65–1080	Push rod cover tube	1
13	B31 B33	65–1142	Valve rocker inspection cover	1
14	B31 B33	2–2582	Valve rocker inspection cover screw	4
15	B31 B33	65–1143	Valve rocker inspection cover washer	1
16	B31 B33	65–2687	Exhaust pipe	1
16	B31 B33 (swinging arm)	42–2705	Exhaust pipe	1
—	B31 B33 (swinging arm)	42–2861	Silencer and exhaust pipe clip (1956)	1
—	B31 B33 (swinging arm)	21–5102	Silencer clip pin nut (1956)	1
—	B31 B33 (swinging arm)	90–3063	Exhaust pipe clip pin (1956)	1
—	B31 B33 (swinging arm)	90-3064	Exhaust pipe clip swivel pin (1956)	1
17	B31	65–1110	Valve (exhaust)	1
17	B33	65–1240	Valve (exhaust)	1
18	B31	65–1514	Valve guide (exhaust)	1
18	B33	65–1516	Valve guide (exhaust)	1
19	B31 B33	65–1149	Valve spring collar (exhaust)	1
20	B31	15–1525	Valve split cotter (exhaust) (halves)	2
20	B33	15–1525	Valve split cotter (inlet and exhaust) (halves)	4
21	B31	31–103	Valve stem cap exhaust	1
22	B31 B33	65–1160	Cylinder head cover (exhaust)	1
23	B31 B33	2–443	Exhaust lifter cable holder nut	1
24	B31 B33	27–1163	Exhaust lifter cable holder	1
25	B31 B33	2–443	Exhaust lifter spindle nut	1
26	B31 B33	2–525	Exhaust lifter spindle washer	1
27	B31 B33	65–1137	Exhaust lifter	1
28	B31 B33	35–701	Exhaust lifter spindle split pin	1
29	B31 B33	65–1165	Exhaust lifter spindle	1
30	B31 B33	2–2894	Exhaust lifter bush washer (fibre)	1
31	B31 B33	65–387	Exhaust lifter bush	1
32	B31 B33	65–401	Exhaust lifter spindle washer (felt)	1
33	B31 B33	65–402	Exhaust lifter spindle washer	1
34	B31 B33	65–403	Exhaust lifter spindle spring	1
35	B31 B33	66–1436	Exhaust lifter lever	1
36	B31 B33	2–443	Exhaust lifter spindle nut	1
37	B31 B33	2–525	Exhaust lifter spindle washer	1
38	B31 B33	65–317	Rocker oil feed pipe banjo screw	2
39	B31 B33	66–102	Sparking plug washer	1
40	B31 B33	65–114	Sparking plug	1
41	B31	65–209	Valve stem cap (inlet)	1
42	B31	29–410	Valve split cotter (inlet) (halves)	2
43	B31 B33	65–1149	Valve spring collar (inlet)	1
44	B31 B33	31–8430	Rocker oil feed pipe union washer	2
45	B31 B33	65–1161	Valve rocker fulcrum pin	2
46	B31 B33	65–1146	Valve spring (inner)	2
47	B31 B33	65–1147	Valve spring (outer)	2
48	B31	65–1513	Valve guide (inlet)	1
48	B33	65–1515	Valve guide (inlet)	1
49	B31 B33	65–1118	Valve rocker fulcrum pin washer	2
50	B31 B33	65–1117	Valve rocker fulcrum spring	2

Plate 1

ENGINE

B31 B33 Rigid and Spring
B31 B33 Swinging Arm Frame

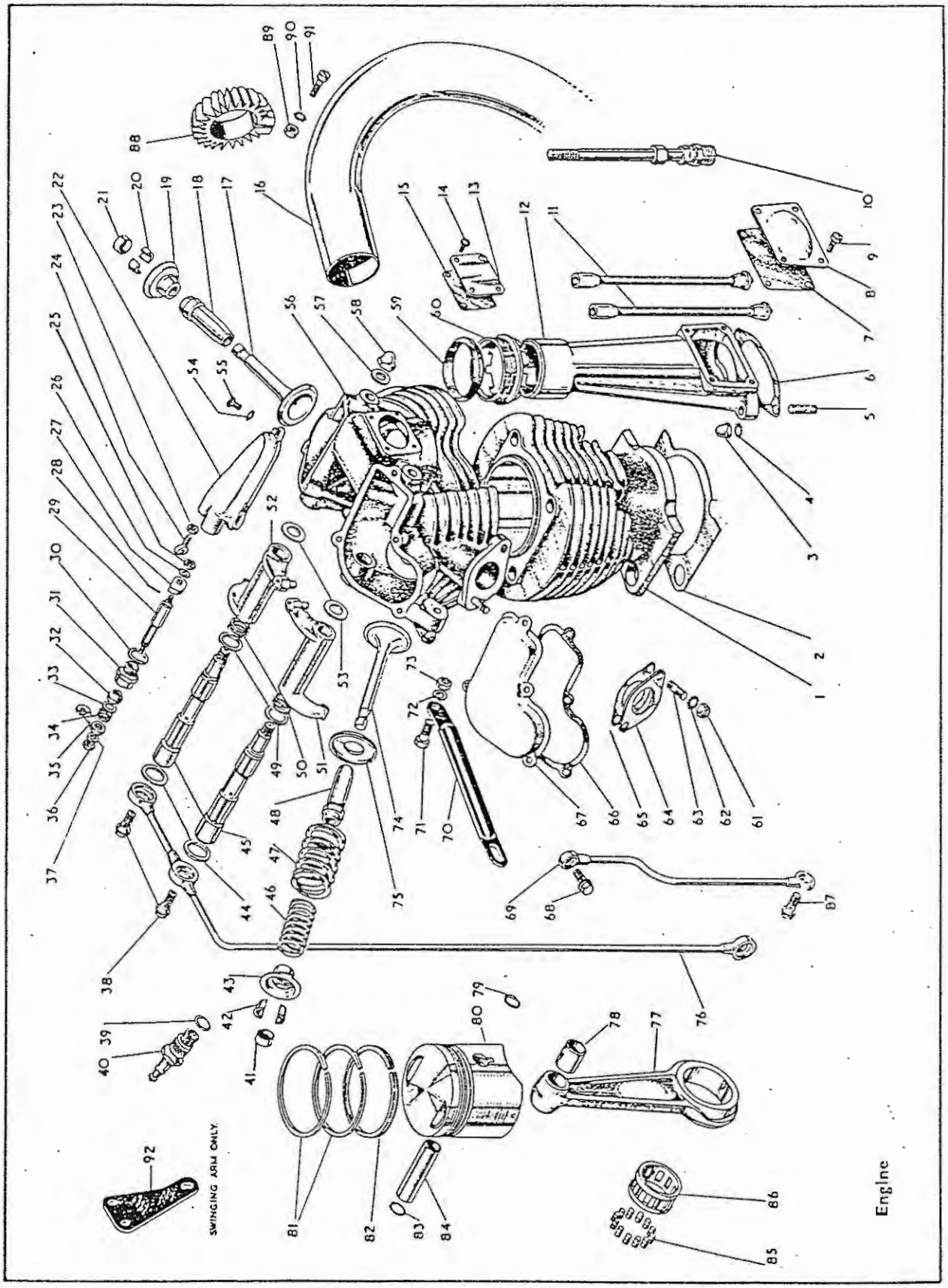

ENGINE

B31 B33 Rigid and Spring
B31 B33 Swinging Arm Frame

Plate Ref. Number.	Models.	Part No.	Description.	Number per set.
51	B31 B33	65–1102	Valve rocker (inlet)	1
52	B31 B33	65–1100	Valve rocker (exhaust)	1
53	B31 B33	27–1111	Valve rocker spindle thrust washer	2
54	B31 B33	29–541	Cylinder head cover washer	8
55	B31 B33	65–1166	Cylinder head cover screw	8
56	B31	65–1700	Cylinder head with fixed fittings	1
56	B33	65–1704	Cylinder head with fixed fittings	1
57	B31 B33	36–481	Valve rocker spindle nut washer	2
58	B31 B33	65–311	Valve rocker spindle nut	2
59	B31 B33	66–1367	Push rod cover tube gland packing	1
60	B31 B33	65–1082	Push rod cover tube gland nut	1
61	B31 B33	2–49	Carburetter stud nut	2
—	B31 B33 (swinging arm)	65–1776	Sparking plug suppressor (1956)	1
62	B31 B33	36–382	Carburetter stud nut washer	2
63	B31 B33	24–5205	Carburetter stud	2
64	B31	65–1163	Carburetter flange washer (Tufnol)	1
64	B33	65–1238	Carburetter flange washer (Tufnol)	1
65	B31	65–1162	Carburetter flange washer (paper)	2
65	B33	65–1232	Carburetter flange joint washer (paper)	2
66	B31 B33	65–1164	Cylinder head cover washer (paper)	2
67	B31 B33	65–1159	Cylinder head cover (inlet)	1
68	B31 B33	26–1253	Oil return pipe banjo screw (top)	1
69	B31 B33 (swinging arm)	65–1218	Oil return pipe complete	1
70	B31 B33	65–1153	Engine steady stay	1
71	B31 B33	15–480	Engine steady stay bolt	1
72	B31 B33	24–8784	Engine steady stay washer	1
73	B31 B33	2–49	Engine steady stay bolt nut	1
74	B31	65–1111	Valve (inlet)	1
74	B33	65–1239	Valve (inlet)	1
75	B31 B33	65–1519	Valve spring seat	2
76	B31 B33	65–1544	Rocker oil feed pipe complete	1
76	B31 B33 (swinging arm)	42–48	Rocker oil feed pipe complete	1
77	B31	66–482	Connecting rod with bushes	1
77	B33	65–1613	Connecting rod with bushes	1
78	B31 B33	66–492	Gudgeon pin bush	1
79	B31 B33	66–954	Gudgeon pin retaining circlip	1
80	B31	65–809	Piston complete with rings, gudgeon pin and circlips (standard) (1954/6)	1
80	B33	65–1692	Piston complete with rings, gudgeon pin and circlips (standard) (1954/5)	1
80	B33	65–1660	Piston complete with rings, gudgeon pin and circlips (7.5 to 1 C.R.) (1954/6)	1
80	B33	65–1256	Piston complete with rings, gudgeon pin and circlips (8.5 to 1 C.R.) (1954/5)	1
80	B33	65–2581	Piston complete with rings, gudgeon pin and circlips (11 to 1 C.R.) (1954/5)	1
81	B31	65–744	Compression ring	2
81	B33	65–1250	Compression ring	2
81	B33	24–1792	Compression ring (Maxigroove)	2
82	B31	65–735	Piston scraper ring	1
82	B33	65–1253	Piston scraper ring	1
83	B31 B33	66–954	Gudgeon pin retaining circlip	1
84	B31	65–440	Gudgeon pin	1
84	B33	66–953	Gudgeon pin	1
85	B31 B33	24–375	Crankpin roller	24
86	B31 B33	66–506	Roller cage	1
87	B31 B33	26–1253	Oil return pipe banjo screw (bottom)	1
88	B31 B33	66–2890	Exhaust pipe finned collar	1
89	B31 B33	21–5102	Exhaust pipe finned collar nut	1
90	B31 B33	29–541	Exhaust pipe finned collar screw washer	1
91	B31 B33	21–6187	Exhaust pipe finned collar screw	1
92	B31 B33 (swinging arm)	42–50	Engine steady plate	1

ENGINE

B31 B33 Rigid and Spring
B31 B33 Swinging Arm Frame

Plate Ref. Number.	Models.	Part No.	Description.	Number per set.
1	B31 B33	1–4675	Oil valve spring ball	1
2	B31 B33	66–1684	Oil valve spring	1
3	B31 B33	66–1683	Oil valve retaining screw washer (fibre)	1
4	B31 B33	65–2188	Oil valve spring retaining screw	1
5	B31 B33	65–2157	Timing cover screw	9
6	B31 B33	65–2143	Timing cover	1
7	B31 B33	66–1920	Timing cover washer	1
8	B31 B33	66–698	Engine shaft oil feed pipe	1
9	B31 B33	29–905	Engine shaft timing pinion nut	1
10	B31 B33	66–1923	Timing cover oil feed washer (rubber)	2
11	B31 B33	66–2007	Cam pinion spindle bolt	2
12	B31 B33	66–2008	Timing gear plate with bearing	1
13	B31 B33	65–441	Cam pinion bush (exhaust)	2
14	B31 B33	65–2420	Cam pinion complete (exhaust)	1
15	B31 B33	65–2426	Cam pinion spindle (exhaust)	1
16	B31 B33	65–692	Engine shaft timing pinion	1
17	B31 B33	66–1493	Tappet (inlet and exhaust)	2
18	B31 B33	66–1494	Tappet guide (inlet and exhaust)	2
19	B31	15–6524	Tappet locknut	2
19	B33 (swinging arm)	65–1332	Tappet locknut (1956)	2
19	B33 (swinging arm)	15–6524	Tappet locknut (1954/5)	2
20	B31 B33	66–1511	Tappet head (inlet and exhaust)	2
21	B31 B33	*66–1616	Crankcase with fixed fittings (gear side) (see footnote)	1
22	B31 B33	31–212	Crankcase stud (top) (rear)	1
23	B31 B33	66–2321	Magdyno strap (short) (1954/5)	1
23	B31 B33 (swinging arm)	66–2353	Magdyno strap (short) (1956)	1
24	B31 B33	65–2353	Magdyno strap eye plug (tapped)	1
25	B31 B33	66–2320	Magdyno strap (long) (1954/5)	1
25	B31 B33 (swinging arm)	66–2355	Magdyno strap (long) (1956)	1
26	B31 B33	65–2352	Magdyno strap eye plug (plain)	1
27	B31 B33	29–4662	Magdyno strap eye plug saddle washer	1
28	B31 B33	2–923	Magdyno strap clip bolt washer	1
29	B31 B33	27–5156	Magdyno strap clip bolt	1
30	B31 B33	*66–1642	Crankcase with fixed fittings (drive side) (see footnote)	1
31	B31 B33	15–1355	Crankcase connecting bolt	3
32	B31 B33	24–949	Crankcase stud (rear)	1
33	B31 B33	66–1683	Crankcase oil pipe adaptor washer	2
34	B31 B33	65–2252	Crankcase oil pipe adaptor	2
35	B31	65–1125	Flywheel with engine shaft (gear side)	1
35	B33	65–1235	Flywheel with engine shaft (gear side)	1
36	B31 B33	2–4553	Crankcase drain plug washer (fibre)	1
37	B31 B33	28–243	Crankcase drain plug	1
38	B31	65–1123	Flywheel with engine shaft (drive side)	1
38	B33	65–1233	Flywheel with engine shaft (drive side)	1
39	B31 B33	27–1239	Engine shaft rivet	14
40	B31 B33	66–545	Crankpin	1
41	B31 B33	65–1128	Engine shaft (drive side)	1
42	B31 B33	2–36	Crankpin key	1
43	B31 B33	66–630	Thrust washer rivet	6
44	B31 B33	66–629	Thrust washer	2
45	B31 B33	65–2520	Cush drive bearing nut (1954/5)	1
45	B31 B33 (swinging arm)	42–71	Cush drive bearing nut (1956)	1
46	B31 B33	65–2521	Cush drive bearing lockwasher	1
47	B31 B33	67–1136	Cush drive spring (1955/6)	1
47	B31 B33	66–1706	Cush drive spring (1954)	1
48	B31 B33	67–1135	Cush drive sleeve (1955)	1
48	B31 B33	15–1555	Cush drive sleeve (1954)	1
48	B31 B33	42–70	Cush drive sleeve (1956)	1
49	B31	65–2537	Engine sprocket (17T) (1955/6)	1
49	B31	15–1567	Engine sprocket (17T) (1954)	1
49	B33	45–2776	Engine sprocket (19T) (1955/6)	1
49	B33	15–1565	Engine sprocket (19T) (1954)	1

*Supplied only as 66–1644 Crankcase drive side and gear side assembled with fixed fittings 1

Plate 2

ENGINE

B31 B33 Rigid and Spring
B31 B33 Swinging Arm Frame

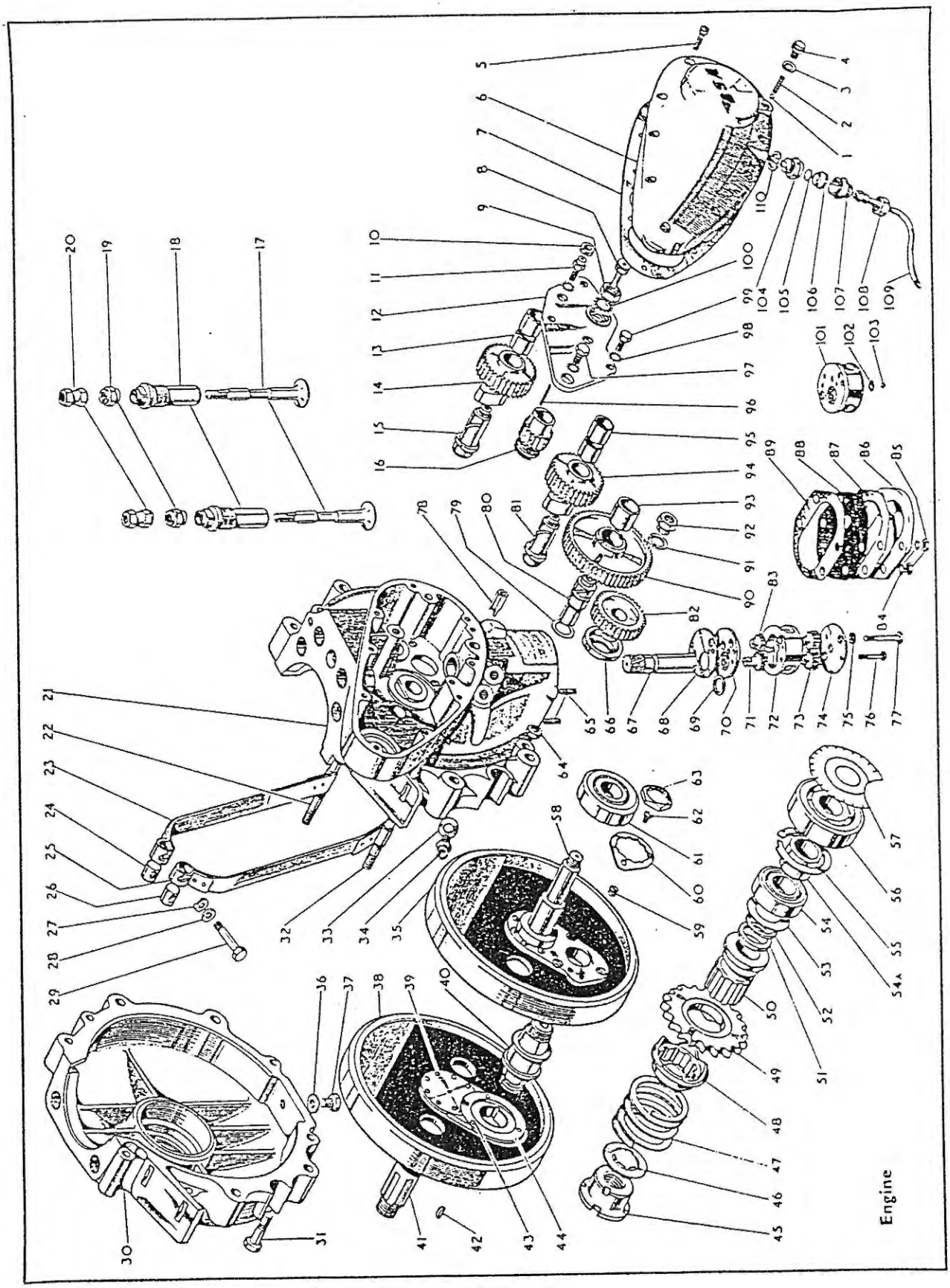

ENGINE

B31 B33 Rigid and Spring
B31 B33 Swinging Arm Frame

Plate Ref. Number.	Models.	Part No.	Description.	Number per set.
50	B31 B33	65–2539	Cush drive bearing (1954/5)	1
50	B31 B33	65–2523	Cush drive bearing (1954)	1
50	B31 B33 (swinging arm)	42–73	Cush drive bearing (1956)	1
51	B31 B33 (swinging arm)	65–2528	Cush drive distance piece (.320″–.325″)	1
51	B31 B33	65–2540	Cush drive distance piece (.233″–.238″)	As required
51	B31 B33	65–2528	Cush drive distance piece (.320″–.325″) 1954	1
52	B31 B33	66–1707	Cush drive bearing alignment washer (.032″)	As required
52	B31 B33	66–1708	Cush drive bearing alignment washer (.064″)	As required
53	B31 B33	66–661	Engine shaft shim (drive side)	1
54	B31 B33	65–2045	Ball bearing (drive side)	1
54A	B31 B33	66–660	Engine shaft distance collar	1
55	B31 B33	65–2240	Main bearing spring ring	1
56	B31 B33	24–724	Roller bearing (drive side)	1
57	B31 B33	24–2113	Oil flinger	1
58	B31 B33	65–1129	Engine shaft (gear side)	1
59	B31 B33	65–479	Crankpin oil hole grub screw	1
60	B31 B33	31–300	Crankpin nut locking washer	2
—	B31 B33	66–2313	Magdyno dowel	4
61	B31 B33	24–722	Roller bearing (gear side)	1
62	B31 B33	2–77	Crankpin nut locking washer screw	2
63	B31 B33	31–298	Crankpin nut	2
64	B31 B33	2–49	Crankcase connecting bolt nut	5
65	B31 B33	31–222	Crankcase scavenge cover stud	4
66	B31 B33	65–2316	Magdyno driving pinion oil seal	1
67	B31 B33	66–2620	Oil pump driving spindle	1
68	B31 B33	65–2618	Oil pump and crankcase joint washer	1
69	B31 B33	65–2606	Oil pump top plate washer	1
70	B31 B33	65–2598	Oil pump top plate	1
71	B31 B33	†65–2601	Oil pump feed gear (driver) (1954/5)	1
71	B31 B33 (swinging arm)	65–2592	Oil pump feed gear (driver) (1956)	1
72	B31 B33	65–2596	Oil pump body	1
73	B31 B33	†65–2599	Oil pump scavenge gear (1954/5)	2
73	B31 B33 (swinging arm)	65–2590	Oil pump scavenge gear (1956)	2
74	B31 B33	65–2625	Oil pump bottom plate	1
75	B31 B33	24–978	Oil pump bolt washer (spring)	2
76	B31 B33	15–848	Oil pump bolt	2
77	B31 B33	65–2604	Oil pump fixing bolt	2
78	B31 B33	65–2580	Oil pump driving spindle retaining pin	1
79	B31 B33	36–3528	Idler pinion thrust washer	1
80	B31 B33	65–2335	Idler pinion spindle	1
81	B31 B33	65–2425	Cam pinion spindle (inlet)	1
82	B31 B33	65–2334	Magdyno driving pinion	1
83	B31 B33	†65–2600	Oil pump feed gear (driven) (1954/5)	1
83	B31 B33 (swinging arm)	65–2591	Oil pump feed gear (driven) (1956)	1
84	B31 B33	29–541	Crankcase scavenge cover stud washer	4
85	B31 B33	2–51	Crankcase scavenge cover stud nut	4
86	B31 B33	65–2611	Crankcase scavenge cover	1
87	B31 B33	65–2612	Crankcase scavenge cover washer	1
88	B31 B33	65–2623	Crankcase scavenge gauze	1
89	B31 B33	65–2612	Crankcase scavenge cover washer	1
90	B31 B33	66–2250	Magdyno drive idler pinion complete	1
91	B31 B33	2–2903	Magdyno driving pinion washer (spring)	1
92	B31 B33	24–195	Magdyno driving pinion nut	1
93	B31 B33	65–2336	Idler pinion bush	1
94	B31 B33	65–2420	Cam pinion complete (inlet)	1
95	B31 B33	65–441	Cam pinion bush (inlet)	2
96	B31 B33	65–693	Engine shaft timing pinion key	1
97	B31 B33	1–5069	Timing gear plate bolt	1
98	B31 B33	36–382	Timing gear plate washer (shakeproof)	6
99	B31 B33	21–2902	Timing gear plate bolt	3
100	B31 B33	65–695	Timing pinion locking washer	1

†65–2601 replaced by 65–2592. 65–2599 (2) replaced by 65–2590 (2). 65–2600 replaced by 65–2591.
For replacement purposes these gears are only supplied in sets of four.

Plate 2—*continued.* ENGINE

B31 B33 Rigid and Spring
B31 B33 Swinging Arm Frame

Plate Ref. Number.	Models.	Part No.	Description.	Number per set.
101	B31 B33	65–2619	Oil pump complete (1954/5)	1
101	B31 B33 (swinging arm)	65–2589	Oil pump complete (1956)	1
102	B31 B33	65–2622	Oil pump ball retaining circlip	1
103	B31 B33	65–2593	Oil pump ball	1
104	B31 B33	65–2168	Timing cover air release adaptor	1
105	B31 B33	15–82	Air release disc	1
106	B31 B33	65–2171	Air release adaptor screw	1
107	B31 B33	65–2165	Timing cover air release body	1
108	B31 B33	66–8332	Breather extension pipe nut	1
109	B31 B33	65–2166	Timing cover breather extension pipe	1
110	B31 B33	31–8430	Air release adaptor (washer fibre)	1

Plate 3 ENGINE

B32 B34 Rigid Frame (Competition)
B32 B34 Swinging Arm Frame

Plate Ref. Number.	Models.	Part No.	Description.	Number per set.
1	B32	65–1601	Cylinder barrel with liner	1
1	B34	65–1503	Cylinder barrel with liner	1
2	B32	65–1756	Cylinder head with fixed fittings (1954/5)	1
2	B32 Swinging arm (Competition)	65–1754	Cylinder head with fixed fittings (1956)	1
2	B34	65–1749	Cylinder head with fixed fittings	1
3	B32 B34	65–1587	Rocker box joint washer (tower)	1
4	B32 B34	65–1591	Cylinder head and rocker box stud (long)	3
5	B32 B34	65–1084	Push rod complete	2
6	B32 (Rigid Competition)	42–2748	Exhaust pipe	1
6	B34 (Rigid Competition)	42–2822	Exhaust pipe	1
6	B32 (Swinging Arm)	42–2778	Exhaust pipe (1954/5)	1
6	B34 (Swinging Arm)	42–2705	Exhaust pipe (1954/5)	1
6	B32 B34 (swinging arm)	42–2914	Exhaust pipe complete (1956)	1
7	B32 B34	65–1592	Cylinder head and rocker box stud (short)	6
8	B32	65–1760	Exhaust valve	1
8	B34	65–1753	Exhaust valve	1
9	B32	65–1596	Valve guide (exhaust)	1
9	B34	65–1598	Valve guide (exhaust)	1
10	B32	65–1627	Valve spring collar (exhaust)	1
10	B34	65–1629	Valve spring collar (exhaust)	1
11	B32	65–1626	Valve spring split cotter (exhaust) (halves)	2
11	B34	65–1625	Valve spring split cotter (exhaust) (halves)	2
12	B32 B34	65–1590	Rocker box inspection cover joint washer	1
13	B32 B34	65–1589	Rocker box inspection cover	1
14	B32 B34	24–8784	Rocker box stud nut washer	9
15	B32 B34	2–49	Rocker box stud nut	9
16	B32 B34	2–433	Exhaust lifter spindle nut	1
17	B32 B34	2–525	Exhaust lifter washer	1
18	B32 B34	65–1137	Exhaust lifter	1
19	B32 B34	2–443	Exhaust lifter cable holder nut	1
20	B32 B34	27–1163	Exhaust lifter cable holder	1
21	B32 B34	35–701	Exhaust lifter split pin	1
22	B32 B34	65–1165	Exhaust lifter spindle	1
23	B32 B34	2–2894	Exhaust lifter spindle washer (fibre)	1
24	B32 B34	65–387	Exhaust lifter bush	1

Plate 3

ENGINE

B32 B34 Rigid Frame (Competition)
B32 B34 Swinging Arm Frame

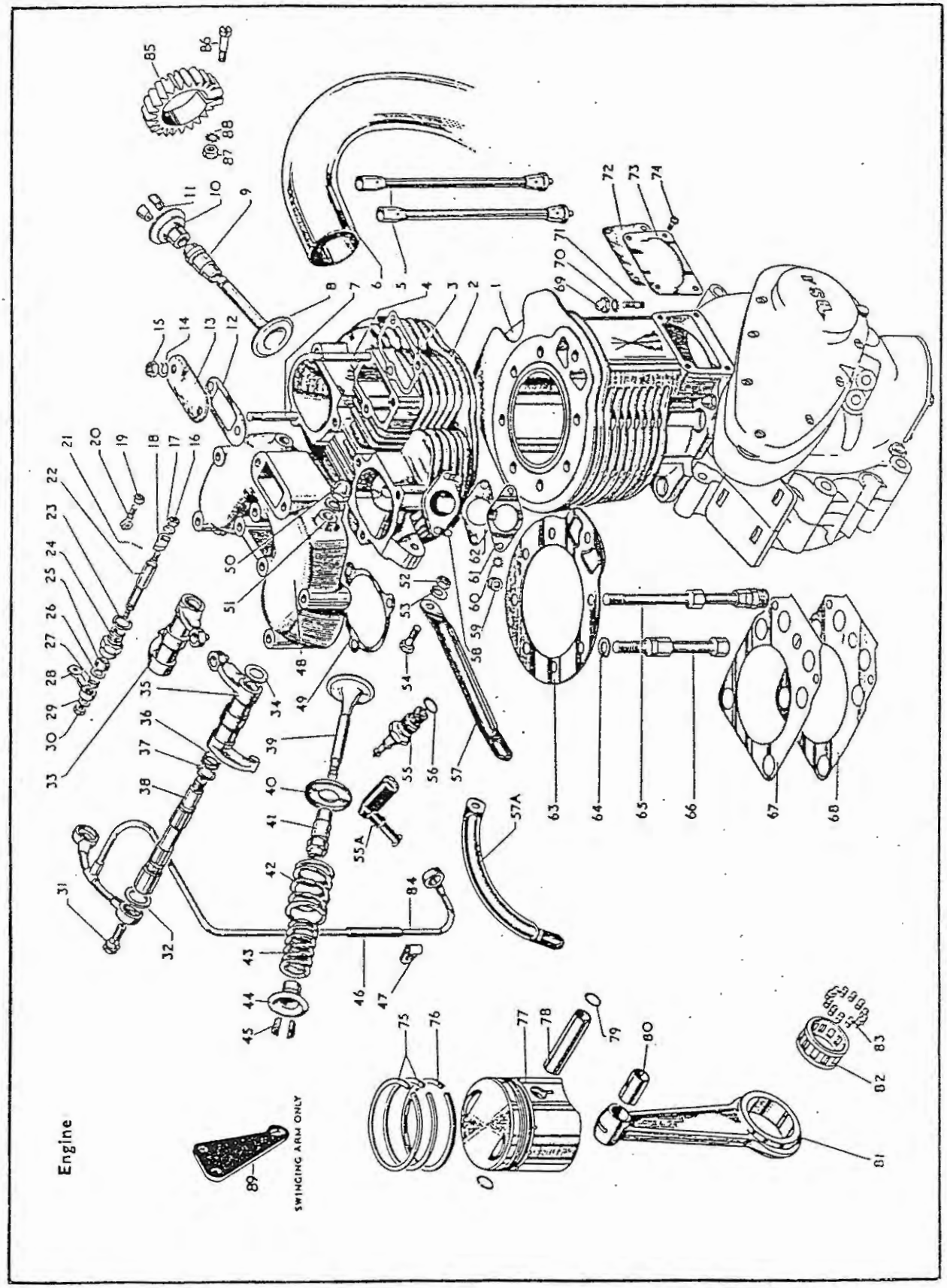

ENGINE

B32 B34 Rigid Frame (Competition)
B32 B34 Swinging Arm Frame

Plate Ref. Number.	Models.	Part No.	Description.	Number per set.
25	B32 B34	65–401	Exhaust lifter spindle washer (felt)	1
26	B32 B34	65–402	Exhaust lifter spindle washer	1
27	B32 B34	65–403	Exhaust lifter spindle spring	1
28	B32 B34	66–1436	Exhaust lifter lever	1
29	B32 B34	2–525	Exhaust lifter washer	1
30	B32 B34	2–443	Exhaust lifter spindle nut	1
31	B32 B34	65–317	Rocker oil feed pipe banjo screw (1954/5)	2
31	B32 B34 (swinging arm)	65–317	Rocker oil feed pipe banjo screw (inlet) (1956)	1
31	B32 B34 (swinging arm)	65–318	Rocker oil feed pipe banjo screw (exhaust) (1956)	1
32	B32 B34	31–S430	Rocker oil feed pipe banjo washer (fibre)	1
33	B32 B34	65–1100	Valve rocker (exhaust)	1
34	B32 B34	27–1111	Valve rocker fulcrum pin thrust washer	2
35	B32 B34	65–1102	Valve rocker (inlet)	1
36	B32 B34	65–1117	Valve rocker fulcrum pin spring	2
37	B32 B34	65–1118	Valve rocker fulcrum pin washer	2
38	B32 B34	65–1161	Valve rocker fulcrum pin	2
39	B32	65–1759	Valve (inlet)	1
39	B34	65–1752	Valve (inlet)	1
40	B32 B34	65–1519	Valve spring seat	2
41	B32	65–1595	Valve guide (inlet)	1
41	B34	65–1597	Valve guide (inlet)	1
42	B32	65–1249	Valve spring (outer)	2
42	B34	65–1147	Valve spring (outer)	2
43	B32 B34	65–1259	Valve spring (inner)	2
44	B32	65–1628	Valve spring collar (inlet)	1
44	B34	65–1627	Valve spring collar (inlet)	1
45	B32	65–1624	Valve spring split cotter (inlet) (halves)	2
45	B34	65–1626	Valve spring split cotter (inlet) (halves)	2
46	B32 B34	66–S338	Rocker oil feed pipe connection (rubber)	1
47	B32 B34	65–1366	Rocker spindle oil feed pipe clip	1
48	B32 B34	65–1506	Rocker box	1
49	B32 B34	65–158S	Rocker box joint washer	2
50	B32 B34	65–311	Valve rocker fulcrum pin nut	2
51	B32 B34	36–481	Valve rocker fulcrum pin washer	2
52	B32 B34	2–49	Engine steady stay bolt nut	1
53	B32 B34	24–S784	Engine steady stay bolt washer	1
54	B32 B34	15–480	Engine steady stay bolt	1
55	B32 B34	65–113	Sparking plug	1
55A	B32 B34	67–985	Sparking plug waterproof cover (1954/5)	1
55A	B32 B34	65–1776	Sparking plug suppressor (1956)	1
56	B32 B34	66–102	Sparking plug washer	1
57	B32 B34	65–1153	Engine steady stay	1
57A	B34	65–1433	Engine steady stay (for use with twin top feed T.T. carburetter)	1
58	B32 B34	29–565	Carburetter stud	2
59	B32 B34	2–49	Carburetter stud nut	2
60	B32 B34	36–382	Carburetter stud nut washer	2
61	B32	65–1163	Carburetter flange washer (Tufnol)	1
61	B34	65–123S	Carburetter flange washer (Tufnol)	2
62	B32	65–1162	Carburetter flange washer (paper)	2
62	B34	55–1232	Carburetter flange washer (paper)	2
63	B32	65–164S	Cylinder head gasket	1
63	B34	65–158O	Cylinder head gasket	1
64	B32	2–2903	Cylinder head bolt washer	4
64	B34	3–110	Cylinder head bolt washer	4
65	B32	65–1609	Cylinder holding down bolt	4
65	B34	65–1403	Cylinder and head holding down bolt	4
66	B32	68–134	Cylinder head and barrel bolt	4
66	B34	65–1413	Cylinder head bolt (medium)	4
67	B32 B34	65–1650	Cylinder base shim (.010″)	As required
67	B32 B34	65–1651	Cylinder base shim (.020″)	As required
67	B32 B34	65–1652	Cylinder base shim (.030″)	As required
67	B32 B34	65–1653	Cylinder base shim (.064″)	As required
68	B32 B34	65–1582	Cylinder base washer	1
69	B32 B34	65–930	Cylinder barrel stud nut	2
70	B32 B34	29–541	Cylinder barrel stud nut washer	2
71	B32 B34	24–4227	Cylinder barrel stud	2
72	B32 B34	66–1937	Push rod tappet recess cover joint washer	1

Plate 3—*continued* ENGINE

B32 B34 Rigid Frame (Competition)
B32 B34 Swinging Arm Frame

Plate Ref. Number.	Models.	Part No.	Description.	Number per set.
73	B32 B34	66–1936	Push rod tappet recess cover	1
74	B32 B34	29–215S	Push rod tappet recess cover screw	4
75	B32	65–744	Compression ring (1954/5)	2
75	B32 (swinging arm)	65–1621	Compression ring (1956)	2
75	B34	65–1250	Compression ring	2
76	B32	65–735	Scraper ring	1
76	B34	65–1253	Scraper ring	1
77	B32	65–1679	Piston complete with gudgeon pin, rings and circlips (standard) (C.R. 6.5 to 1)	1
77	B34	65–1244	Piston complete with gudgeon pin, rings and circlips (standard) (C.R. 6.8 to 1)	1
77	B34	65–1264	Piston complete with gudgeon pin, rings and circlips (standard) (C.R. 7.5 to 1)	1
77	B34	65–2323	Piston complete with gudgeon pin rings and circlips (C.R. 8 to 1)	As reqd.
78	B32	65–440	Gudgeon pin	1
78	B34	66–953	Gudgeon pin	1
79	B32 B34	66–954	Gudgeon pin retaining ring	2
80	B32 B34	66–492	Gudgeon pin bush	1
81	B32	65–1640	Connecting rod complete with bushes (1954/5)	1
81	B32 (swinging arm)	65–1613	Connecting rod complete (1956)	1
81	B34	66–482	Connecting rod complete with bushes	1
82	B32 B34	66–506	Crankpin roller cage	1
83	B32 B34	24–375	Crankpin roller	24
84	B32 B34	42–65	Rocker oil feed pipe with rubber connection	1
84	B32 B34 (swinging arm)	42–48	Rocker oil feed pipe complete (1954/5)	1
84	B32 B34 (swinging arm)	42–46	Rocker oil feed pipe complete (1956)	1
85	B32 (swinging arm)	67–2694	Exhaust pipe finned collar	1
85	B34 (swinging arm)	65–2890	Exhaust pipe finned collar	1
86	B32 B34 (swinging arm)	21–6187	Exhaust pipe finned collar screw	1
87	B32 B34 (swinging arm)	21–5102	Exhaust pipe finned collar nut	1
88	B32 B34 (swinging arm)	29–541	Exhaust pipe finned collar washer	1
89	B32 B34 (swinging arm)	42–50	Engine steady plate (1954/5)	1
89	B32 B34 (swinging arm)	42–52	Engine steady plate (1956)	1

Plate 4 ENGINE

B32 B34 Rigid Frame (Competition)
B32 B34 Swinging Arm Frame

Plate Ref. Number.	Models.	Part No.	Description.	Number per set.
1	B32 B34	65–2188	Oil valve spring retaining screw	1
2	B32 B34	66–1683	Oil valve spring retaining screw washer (fibre)	1
3	B32 B34	66–1684	Oil valve spring	1
4	B32 B34	1–4675	Oil valve spring ball	1
5	B32 B34	65–2157	Timing cover screw	9
6	B32 B34	65–2143	Timing cover complete	1

Plate 4

ENGINE

B32 B34 Rigid Frame (Competition)
B32 B34 Swinging Arm Frame

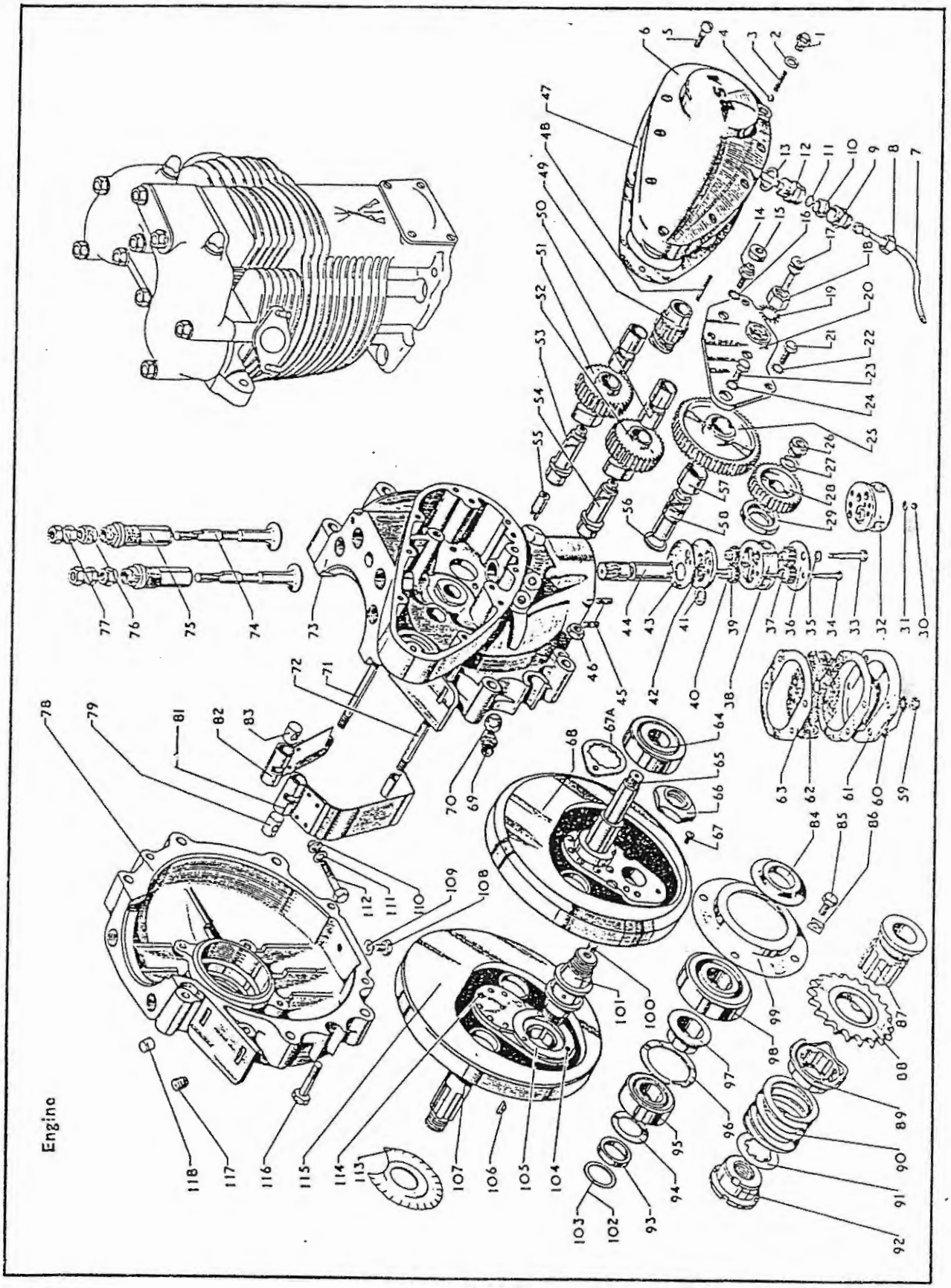

ENGINE

B32 B34 Rigid Frame (Competition)
B32 B34 Swinging Arm Frame

Plate Ref. Number.	Models.	Part No.	Description.	Number per set.
7	B32 B34	65–2166	Timing cover breather extension pipe	1
8	B32	15–8434	Timing cover breather extension pipe nut	1
8	B34	66–8332	Timing cover breather extension pipe nut	1
9	B32 B34	65–2165	Air release body	1
10	B32 B34	65–2171	Air release adaptor screw	1
11	B32 B34	15–82	Air release disc	1
12	B32 B34	65–2168	Timing cover air release adaptor complete	1
13	B32 B34	31–8430	Air release adaptor washer (fibre)	1
14	B32 B34	66–2007	Cam pinion spindle bolt	2
15	B32 B34	66–1923	Oil feed washer (rubber)	2
16	B32 B34	36–382	Cam pinion spindle bolt washer	2
17	B32 B34	66–698	Engine shaft oil feed pipe	1
18	B32 B34	29–905	Engine shaft timing pinion nut	1
19	B32 B34	65–695	Engine shaft timing pinion locking washer	1
20	B32 B34	66–2008	Timing gear plate complete	1
21	B32 B34	21–2902	Timing gear plate bolt (Whit.)	3
22	B32 B34	36–382	Timing gear plate bolt washer (shakeproof)	2
23	B32 B34	1–5069	Timing gear plate bolt	1
24	B32 B34	36–382	Timing gear plate bolt washer (shakeproof)	2
25	B32 B34	66–2250	Magdyno drive idler p nion	1
26	B32 B34	24–195	Magdyno driving pinion nut	1
27	B32 B34	2–2903	Magdyno driving pinion washer (spring)	1
28	B32 B34	65–2334	Magdyno driving pinion	1
29	B32 B34	65–2316	Magdyno driving pinion oil seal	1
30	B32 B34	65–2593	Oil pump valve body ball	1
31	B32 B34	65–2622	Oil pump valve body ball circlip	1
32	B32 B34	65–2619	Oil pump complete (1954/5)	1
32	B32 B34 (swinging arm)	65–2589	Oil pump complete (1956)	1
33	B32 B34	65–2604	Oil pump fixing bolt	2
34	B32 B34	15–848	Oil pump bolt	2
35	B32 B34	24–978	Oil pump fixing bolt washer	2
36	B32 B34	65–2625	Oil pump bottom plate	1
37	B32 B34	†65–2599	Oil pump scavenge gear (1954/5)	1
37	B32 B34 (swinging arm)	65–2590	Oil pump scavenge gear (1956)	2
38	B32 B34	65–2596	Oil pump body	1
39	B32 B34	†65–2600	Oil pump feed gear (driven) (1954/5)	1
39	B32 B34 (swinging arm)	65–2591	Oil pump feed gear (driven) (1956)	1
40	B32 B34	†65–2601	Oil pump feed gear (driver) (1954/5)	1
40	B32 B34 (swinging arm)	65–2592	Oil pump feed gear (driver) (1956)	1
41	B32 B34	65–2606	Oil pump top plate washer	1
42	B32 B34	65–2598	Oil pump top plate	1
43	B32 B34	65–2618	Oil pump and crankcase joint washer	1
44	B32 B34	66–2620	Oil pump driving spindle	1
45	B32 B34	31–222	Crankcase scavenge cover stud	4
46	B32 B34	2–49	Crankcase connecting bolt nut	5
47	B32 B34	66–1920	Timing cover washer	1
48	B32 B34	65–693	Engine shaft timing pinion key	1
49	B32 B34	65–692	Engine shaft timing pinion	1
50	B32 B34	65–441	Cam pinion bush	4
51	B32 B34	65–2420	Exhaust cam pinion complete	1
52	B32 B34	65–2420	Inlet cam pinion complete	1
53	B32 B34	65–2426	Cam pinion spindle (exhaust)	1
54	B32 B34	65–2425	Cam pinion spindle (inlet)	1
55	B32 B34	65–2580	Oil pump driving spindle retaining pin	1
56	B32 B34	36–3528	Magdyno drive idler pinion thrust washer	1
57	B32 B34	65–2336	Magdyno drive idler pinion bush	1
58	B32 B34	65–2335	Magdyno drive idler pinion spindle	1
59	B32 B34	2–51	Crankcase scavenge cover stud nut	4
60	B32 B34	29–541	Crankcase scavenge cover washer (shakeproof)	4
61	B32 B34	65–2611	Crankcase scavenge cover	1
62	B32 B34	65–2623	Oil pump filter	1
63	B32 B34	65–2612	Crankcase scavenge cover washer (oil proof)	2

†65–2601 replaced by 65–2592. 65–2599 (2) replaced by 65–2590 (2). 65–2600 replaced by 65–2591.
For replacement purposes these gears are only supplied in sets of four.

ENGINE

B32 B34 Rigid Frame (Competition)
B32 B34 Swinging Arm Frame

Plate Ref. Number.	Models.	Part No.	Description.	Number per set.
64	B32 B34	24–722	Roller bearing (gear side)	1
65	B32 B34	65–1129	Engine shaft (gear side)	1
66	B32 B34	31–298	Crankpin nut	2
67	B32 B34	2–77	Crankpin locking screw	2
67A	B32 B34	31–300	Crankpin locking nut washer	1
68	B32	65–1125	Flywheel with engine shaft assembly (gear side)	1
68	B34	65–1235	Flywheel with engine shaft assembly (gear side)	1
69	B32 B34	65–2252	Oil pipe crankcase pipe adaptor	1
70	B32 B34	66–1683	Oil pipe crankcase pipe adaptor washer (fibre)	2
71	B32 B34	31–212	Crankcase stud (top) (rear)	1
72	B32 B34	24–949	Crankcase stud (rear)	1
73	B32 B34	*66–1616	Crankcase with fixed fittings (gear side)	1
74	B32 B34	66–1493	Inlet and exhaust tappet	2
75	B32 B34	66–1494	Tappet guide (inlet and exhaust)	2
76	B32 B34	65–1332	Inlet and exhaust tappet locknut	2
77	B32 B34	66–1511	Inlet and exhaust tappet head	2
78	B32 B34	*66–1656	Crankcase with fixed fittings (drive side)	1
79	B32 B34	65–2352	Strap eye plug (plain)	1
81	B32 B34	65–1423	Magneto strap (long)	1
82	B32 B34	65–1425	Magneto strap (short)	1
83	B32 B34	65–2353	Eye plug tapped	1
84	B32 B34	66–660	Engine shaft distance collar (inner) (drive side)	1
87	B32 B34	65–2539	Cush drive bearing	1
87	B32 B34 (rigid)	65–2523	Cush drive bearing (1954)	1
88	B32	65–2430	Engine sprocket (15T)	1
88	B32 (rigid)	65–2536	Engine sprocket (16T)	1
88	B32 B34 (rigid)	15–1568	Engine sprocket (16T) (1954)	1
88	B34 (rigid)	65–2538	Engine sprocket (20T)	1
88	B32 B34 (rigid)	15–1564	Engine sprocket (20T) (1954)	1
88	B32	65–2536	Engine sprocket (16T) (1956)	1
88	B34	65–2538	Engine sprocket (20T) (1956)	1
89	B32 B34	67–1135	Cush drive sleeve	1
89	B32 B34 (rigid)	15–1555	Cush drive sleeve (1954)	1
89	B32	65–2431	Cush drive sliding sleeve (for use with 65–2430 sprocket)	1
90	B32 B34	67–1136	Cush drive spring	1
90	B32 B34 (rigid)	66–1706	Cush drive spring (1954)	1
91	B32 B34	65–2521	Cush drive bearing locking washer	1
92	B32 B34	65–2520	Cush drive bearing nut	1
93	B32 B34	65–2528	Cush drive distance piece	1
93	B32 B34 (rigid)	42–42	Cush drive distance piece (1954)	1
94	B32 B34	66–661	Engine shaft shim (drive side)	1
95	B32 B34	65–2045	Ball bearing (drive side)	1
96	B32 B34	65–2240	Main bearing spring ring	1
98	B32 B34	24–724	Roller bearing (drive side)	1
99		65–1397	Bearing retaining plate (not required for above models)	1
100	B32 B34	65–479	Crankpin plug screw	1
101	B32 B34	66–545	Crankpin	1
102	B32 B34	66–1708	Cush drive bearing alignment washer (.064″)	1
103	B32 B34	66–1707	Cush drive bearing alignment washer (.032″)	1
104	B32 B34	66–630	Connecting rod thrust washer rivet	6
105	B32 B34	66–629	Connecting rod thrust washer	2
106	B32 B34	2–36	Crankpin key	1
107	B32 B34	65–1128	Engine shaft (drive side)	1
108	B32 B34	28–243	Crankcase drain plug	1
109	B32 B34	2–4553	Crankcase drain plug washer	1
110	B32 B34	29–4662	Saddle washer (magneto strap)	1
111	B32 B34	2–923	Strap clip bolt washer (plain)	1
112	B32 B34	29–4661	Strap clip bolt	1
113	B32 B34	24–2113	Oil flinger	1
114	B32 B34	27–1239	Engine shaft rivet	14
115	B32	65–1123	Flywheel with engine shaft assembled (drive side)	1
115	B34	65–1233	Flywheel with engine shaft assembled (drive side)	1
116	B32 B34	15–1355	Crankcase connecting bolt	3
117	B32 B34	66–1717	Magneto dowel (B.T.H.)	4
118	B32 B34	66–2313	Magneto dowel (Lucas)	4

*Supplied only as 66–1663 Crankcase (drive side and gear side) with fixed fittings ... 1

Plate 5

GEARBOX

B31 B33 Rigid and Spring Frame

Plate Ref. Number.	Models.	Part No.	Description.	Number per set.
—	B31 B33	66–3140	Gearbox shell complete with fixed fittings	1
1	B31 B33	29–3250	Operating pedal spindle rubber	1
2	B31 B33	29–3242	Gearbox outer cover stud nut	4
3	B31 B33	65–3364	Outer cover inspection cap	1
4	B31 B33	67–42	Outer cover inspection cap washer	1
5	B31 B33	66–3125	Gearbox outer cover	1
6	B31 B33	28–2080	Outer cover grease nipple	1
7	B31 B33	66–3065	Gearbox outer and inner cover screw	3
8	B31 B33	65–3397	Kickstarter crank rubber	1
9	B31 B33	15–4227	Ratchet lever sleeve bush	1
10	B31 B33	35–702	Clutch control lever split pin	1
11	B31 B33	15–1485	Clutch control lever nut	1
12	B31 B33	2–452	Clutch push rod lever adjusting screw nut	1
13	B31 B33	65–3403	Clutch push rod lever adjusting screw	1
14	B31 B33	2–525	Clutch control lever nut washer	1
15	B31 B33	65–3360	Clutch push rod lever	1
16	B31 B33	65–3383	Clutch control lever	1
17	B31 B33	65–3417	Gear change operating lever	1
18	B31 B33	2–2395	Pawl pivot locknut	2
19	B31 B33	15–4143	Pawl pivot nut	2
20	B31 B33	2–2578	Kickstarter crank cotter pin nut	1
21	B31 B33	15–5155	Kickstarter crank cotter pin washer	1
22	B31 B33	65–3381	Kickstart pedal	1
23	B31 B33	15–4142	Pawl (bottom)	1
24	B31 B33	15–4141	Pawl (top)	1
25	B31 B33	15–4161	Pawl return spring	1
26	B31 B33	15–4249	Pawl carrier arm (top)	1
27	B31 B33	15–4237	Pawl carrier arm (bottom)	1
28	B31 B33	15–4138	Pawl pivot	2
29	B31 B33	2–2579	Kickstarter crank cotter pin	1
30	B31 B33	2–2211	Operating plate and pawl arm stop screw	2
31	B31 B33	15–4139	Pawl carrier arm main spring	1
32	B31 B33	15–4229	Operating shaft	1
33	B31 B33	15–4228	Operating plate and pawl arm stop	1
34	B31 B33	36–382	Operating plate and pawl arm stop washer	2
35	B31 B33	2–49	Operating plate and pawl arm stop screw nut	2
36	B31 B33	15–4231	Operating plate	1
37	B31 B33	2–440	Operating shaft nut	1
38	B31 B33	15–39	Operating shaft washer	1
39	B31 B33	15–4226	Pedal shaft bush	1
40	B31 B33	15–4223	Indexing plunger sleeve	1
41	B31 B33	15–4225	Indexing plunger spring	1
42	B31 B33	15–4224	Operating plate indexing plunger	1
43	B31 B33	15–4246	Inner cover and case locking strip	1
44	B31 B33	21–2888	Gearbox inner cover bolt	2
45	B31 B33	66–1910	Gearbox outer cover stud	1
46	B31 B33	15–4233	Gear control quadrant spacing collar	1
47	B31 B33	24–4237	Gearbox distance washer	1
48	B31 B33	15–4232	Gear operating lever locking washer	1
49	B31 B33	2–1813	Gear operating lever nut	1
50	B31	65–3940	Clutch push rod	1
50	B33	66–3067	Clutch push rod	1
51	B31 B33	67–3028	Gearbox inner cover ball journal spring ring	1
52	B31 B33	66–3079	Kickstarter ratchet	1
53	B31 B33	66–3080	Kickstarter ratchet pinion	1
54	B31 B33	66–3259	Kickstarter return stop rubber	1
55	B31 B33	66–3081	Kickstarter ratchet pinion sleeve	1
56	B31 B33	24–4256	Kickstarter ratchet spring	1
57	B31 B33	24–4282	Kickstarter ratchet pinion sleeve nut	1
58	B31 B33	15–4121	Kickstarter quadrant	1
59	B31 B33	66–3058	Kickstarter crank spring	1
60	B31 B33	2–3718	Kickstarter crank spring anchor pin	1
61	B31 B33	24–4258	Kickstarter quadrant bush	1
62	B31 B33	66–3131	Outer cover joint washer	1
63	B31 B33	65–3062	Gearbox cover and case screw	4
64	B31 B33	2–443	Kickstarter crank spring anchor pin nut	1
65	B31 B33	24–4255	Kickstarter ratchet pinion sleeve locknut	1
66	B31 B33	24–4278	Kickstarter ratchet pinion locking washer	1
67	B31 B33	2–525	Foot change operating pedal clamp bolt washer	1

Plate 5

GEARBOX

B31 B33 Rigid and Spring Frame

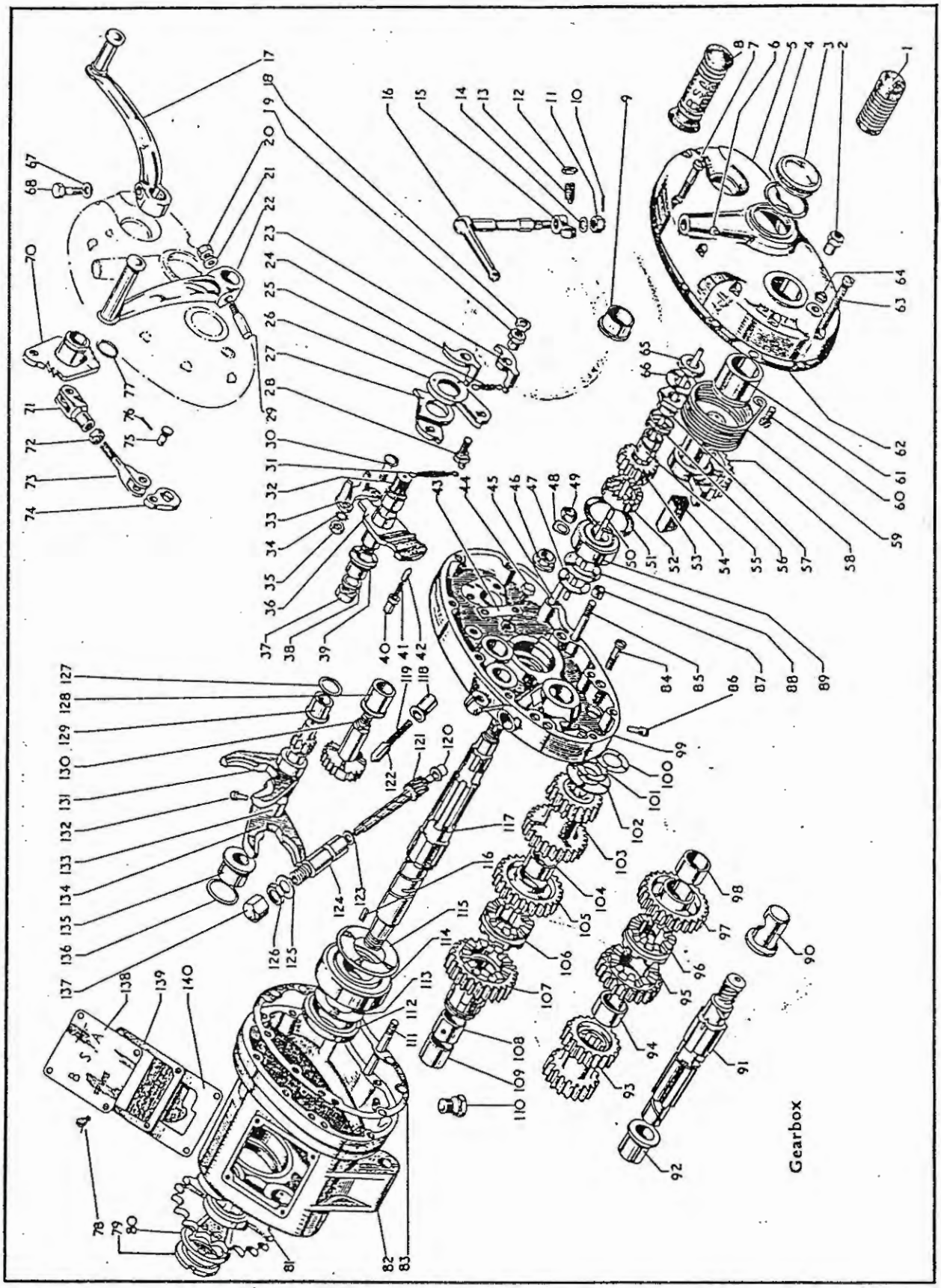

GEARBOX

B31 B33 Rigid and Spring Frame

Plate Ref. Number.	Models.	Part No.	Description.	Number per set
68	B31 B33	65–3361	Foot change operating pedal clamp bolt	1
70	B31 B33	15–4206	Ratchet lever complete	1
—	B31 B33	15–4253	Gear control link complete	1
71	B31 B33	15–4254	Gear control link yoke	1
72	B31 B33	24–563	Gear control link adjuster nut	1
73	B31 B33	15–4255	Gear control link adjuster	1
74	B31 B33	15–4239	Gear operating lever	1
75	B31 B33	15–4221	Gear control link pin	2
76	B31 B33	35–705	Gear control link pin split pin	1
77	B31 B33	15–4240	Operating shaft clip ring	1
78	B31 B33	27–4258	Gearbox inspection cover screw	4
79	B31 B33	24–4226	Gearbox sprocket locknut	1
80	B31 B33	24–4263	Gearbox sprocket nut locking washer	1
81	B31 B33	65–3506	Gearbox sprocket (19T)	1
82	B31 B33	66–3141	Gearbox shell only	1
83	B31 B33	66–3069	Inner joint washer	1
84	B31 B33	65–2157	Inner cover and case screw	3
85	B31 B33	65–3073	Gearbox outer cover stud	1
86	B31 B33	65–3400	Speedometer bush retaining pin	1
87	B31 B33	66–3074	Gearbox dowel	2
88	B31 B33	24–4236	Gearbox retaining washer (small)	1
89	B31 B33	24–4217	Gearbox inner cover ball journal	1
90	B31 B33	66–3133	Gearbox laysbaft bush (long)	1
91	B31 B33	66–3132	Layshaft	1
92	B31 B33	24–4223	Gearbox layshaft bush (short)	1
93	B31 B33	24–4221	Layshaft gear (17T and 20T)	1
94	B31 B33	66–3214	Layshaft gear bush	1
95	B31 B33	66–3215	Layshaft gear (25T) with bush	1
96	B31 B33	24–4393	Gearbox dog clutch	1
97	B31 B33	66–3209	Layshaft gear (29T) with bush	1
98	B31 B33	66–3211	Layshaft gear bush	1
99	B31 B33	66–3128	Inner cover with fixed fittings	1
100	B31 B33	66–3072	Mainshaft packing washer (.010")	1
101	B31 B33	66–3071	Mainshaft packing washer (.005")	As required
102	B31 B33	24–4235	Gearbox oil flinger washer	1
103	B31 B33	24–4231	Mainshaft gear (20T and 16T)	1
104	B31 B33	66–3214	Mainshaft gear bush	1
105	B31 B33	66–3212	Mainshaft gear complete (25T)	1
106	B31 B33	24–4393	Gearbox dog clutch	1
107	B31 B33	15–4165	Pinion sleeve	1
108	B31 B33	66–3156	Pinion sleeve bush (drilled)	1
109	B31 B33	66–3155	Pinion sleeve bush	1
110	B31 B33	28–43	Gearbox drain plug	1
111	B31 B33	29–3304	Gearbox outer cover stud (long)	2
112	B31 B33	65–3508	Gearbox sprocket oil seal	1
113	B31 B33	65–3509	Gearbox sprocket oil seal washer	1
114	B31 B33	24–4065	Gearbox ballrace journal	1
115	B31 B33	24–4225	Gearbox oil retaining washer	1
116	B31 B33	2–433	Gearbox key (mainshaft)	1
117	B31 B33	15–4260	Gearbox mainshaft	1
118	B31 B33	24–4251	Gear control plunger cup	1
119	B31 B33	24–68	Gear control plunger spring	1
120	B31 B33	65–3377	Speedo driven gear bush (small)	1
121	B31 B33	65–3367	Speedo driven gear	1
122	B31 B33	15–4035	Gear control plunger	1
123	B31 B33	65–3375	Speedo driven gear thrust washer	1
124	B31 B33	65–3390	Speedo driven gear bush	1
125	B31 B33	65–3392	Speedo driven gear bush washer (fibre)	1
126	B31 B33	65–3391	Speedo driven gear bush nut	1
—	B31 B33	66–3288	Gear control shaft complete with forks	1
127	B31 B33	66–3087	Gear control shaft bush packing washer (small)	As required
128	B31 B33	24–4248	Gear control quadrant bush	1
129	B31 B33	24–4245	Gear control shaft bush (inner cover)	1
130	B31 B33	24–4247	Gear control quadrant	1
131	B31 B33	66–3290	Gear operating fork	1
132	B31 B33	66–3291	Gear control shaft peg	2
133	B31 B33	66–3083	Gear control shaft	1
134	B31 B33	66–3290	Gear operating fork	1
135	B31 B33	66–3084	Gear control shaft bush	1

Plate 5—*continued*

GEARBOX

B31 B33 Rigid and Spring Frame

Plate Ref. Number.	Models.	Part No.	Description.	Number per set.
136	B31 B33	66–3086	Gear control shaft bush packing washer	As required
137	B31 B33	65–3399	Speedo gear bush sealing nut (when speedo is not fitted)	1
138	B31 B33	66–3070	Gearbox inspection cover	1
139	B31 B33	15–4110	Gearbox inspection cover washer	2
140	B31 B33	24–4288	Gearbox oil baffle	1

Plate 6

GEARBOX

B Group Swinging Arm Frame
B32 B34 Rigid Frame (Competition)

Plate Ref. Number.	Models.	Part No.	Description.	Number per set.
1	B Group (swinging arm) B32 B34 (rigid)	67–3026	Ball bearing spring ring	1
2	B Group (swinging arm) B32 B34 (rigid)	67–3067	Gearbox sprocket oil seal	1
3	B Group (swinging arm) B32 B34 (rigid)	24–4065	Constant mesh gear ball bearing	1
4	B Group (swinging arm) B32 B34 (rigid)	67–3073	Constant mesh gear bush	1
5	B Group (swinging arm)	67–3192	Constant mesh gear complete (26T) (1954/5)	1
5	B31 B33 (swinging arm)	67–3192	Constant mesh gear complete (26T) (1956)	1
5	B32 B34 (swinging arm)	42–3091	Constant mesh gear complete (26T) (1956)	1
5	B32 B34 (rigid)	67–3309	Constant mesh gear complete (26T)	1
6	B Group (swinging arm) B32 B34 (rigid)	67–3073	Constant mesh gear bush (drilled)	1
7	B Group (swinging arm)	67–3201	Mainshaft sliding gear (20T) (1954/5)	1
7	B31 B33 (swinging arm)	67–3201	Mainshaft sliding gear (20T) (1956)	1
7	B32 B34 (rigid)	67–3301	Mainshaft sliding gear (17T) (1954/5)	1
7	B32 B34 (swinging arm)	67–3301	Mainshaft sliding gear (17T) (1956)	1
7	B32 B34 (rigid)	67–3210	Mainshaft sliding gear (22T) (1954/5)	1
7	B32 B34 (swinging arm)	67–3210	Mainshaft sliding gear (22T) (1956)	1
8	B Group (swinging arm)	67–3202	Mainshaft sliding gear (24T) (1954/5)	1
8	B31 B33 (swinging arm)	67–3202	Mainshaft sliding gear (24T) (1956)	1
9	B Group (swinging arm)	67–3329	Gearbox mainshaft complete with gear (1954/5)	1
9	B31 B33 (swinging arm)	67–3329	Gearbox mainshaft with gear (1956)	1
9	B Group (swinging arm)	67–3330	Gearbox mainshaft only (1954/5)	1
9	B31 B33 (swinging arm)	67–3330	Gearbox mainshaft only (1956)	1
9	B32 B34 (rigid)	67–3313	Gearbox mainshaft (1954/5)	1
9	B32 B34 (swinging arm)	67–3313	Gearbox mainshaft with gear (1956)	1
10	B Group (swinging arm) B32 B34 (rigid)	2–433	Gearbox mainshaft key	1
11	B31 B33 (swinging arm)	42–3050	Clutch push rod (1954/5)	1
11	B31 (swinging arm)	29–3477	Clutch push rod (1956)	1
11	B33 (swinging arm)	42–3108	Clutch push rod (1956)	1
11	B32 B34 (rigid and swinging arm)	29–3860	Clutch push rod	1
12	B Group (swinging arm) B32 B34 (rigid)	67–3101	Mainshaft gear locating ring	1
13	B Group (swinging arm)	67–3191	Gearbox mainshaft gear (16T) (1954/5)	1
13	B31 B33 (swinging arm)	67–3191	Mainshaft gear (16T) (1956)	1
14	B Group (swinging arm) B32 B34 (rigid)	24–4217	Mainshaft bearing	1
15	B Group (swinging arm) B32 B34 (rigid)	67–3028	Mainshaft bearing spring ring	1
16	B Group (swinging arm) B32 B34 (rigid)	67–3161	Kickstarter ratchet pinion sleeve washer	1

Plate 6

GEARBOX

B Group Swinging Arm Frame
B32 B34 Rigid Frame (Competition)

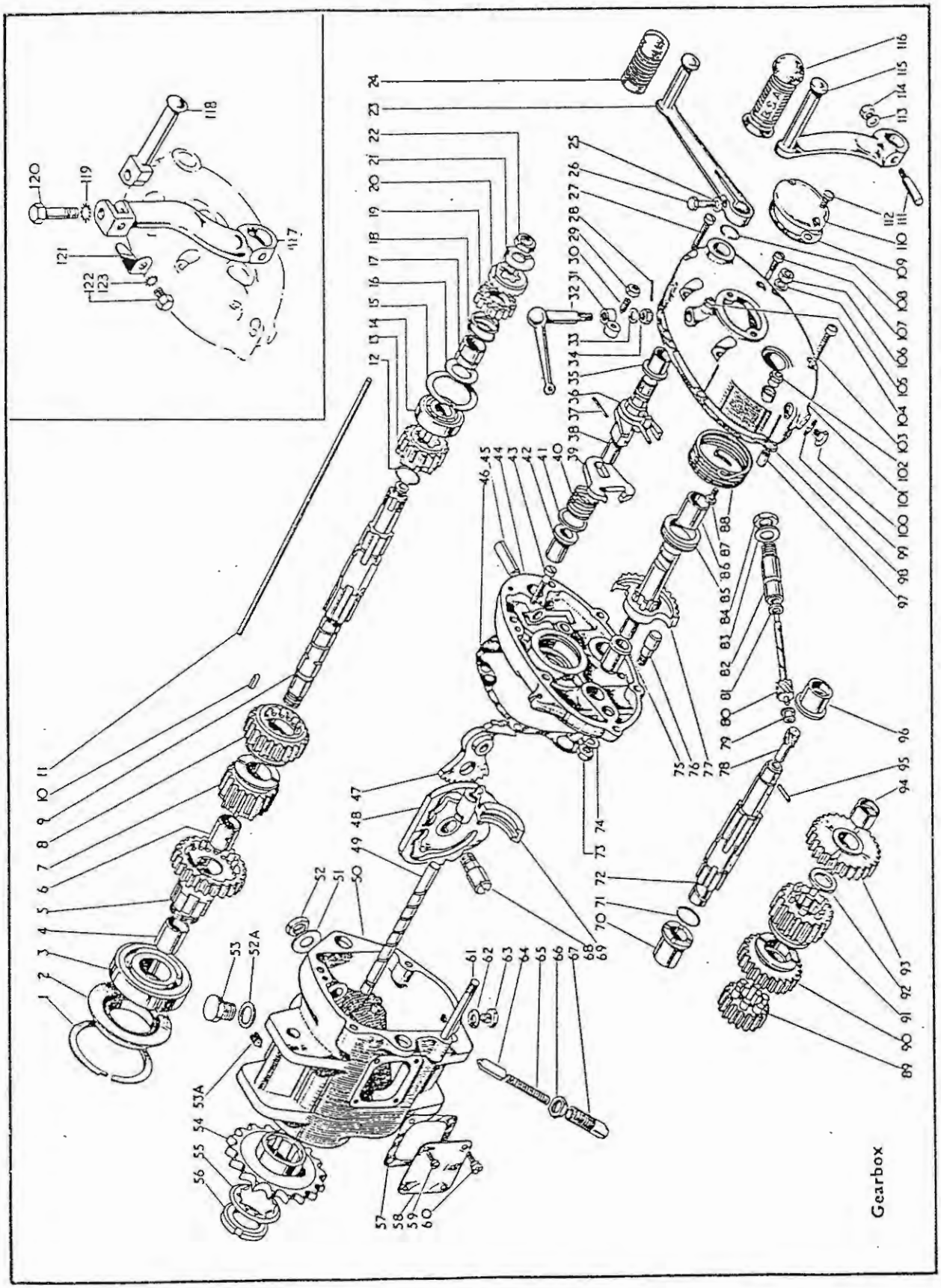

Plat

GEARBOX

B Group Swinging Arm Frame
B32 B34 Rigid Frame (Competition)

| P | | |

GEARBOX

B Group Swinging Arm Frame
B32 B34 Rigid Frame (Competition)

Plate Ref. Number.	Models.	Part No.	Description.	Number per set.
49	B Group (swinging arm) B32 B34 (rigid)	67–3116	Gear shifter fork shaft	1
50	B Group (swinging arm)	42–3006	Gearbox casing with fixed fittings (1954/5)	1
50	B31 B33 (swinging arm)	42–3006	Gearbox casing with fixed fittings (1956)	1
50	B32 B34 (swinging arm)	42–3072	Gearbox casing with fixed fittings (1956)	1
50	B32 B34 (rigid)	42–3008	Gearbox casing with fixed fittings	1
51	B Group (swinging arm) B32 B34 (rigid)	67–3328	Gear cam plate pivot pin washer	1
52	B Group (swinging arm) B32 B34 (rigid)	2–124	Gear cam plate pivot pin nut	1
52A	B32 B34 (rigid)	24–8504	Gearbox casing plug washer	1
52A	B32 B34 (swinging arm)	24–8504	Gearbox casing plug washer (fibre)	1
53	B32 B34 (rigid)	42–3049	Gearbox casing plug	1
53	B32 B34 (swinging arm)	42–3049	Gearbox casing plug	1
53A	B Group (swinging arm) B32 B34 (rigid)	67–3117	Gear shifter fork shaft grub screw	1
54	B Group (swinging arm)	42–3015	Gearbox sprocket (16T) (1954/5)	1
54	B32 B34 (swinging arm)	42–3015	Gearbox sprocket (16T) (1956)	1
54	B32 B34 (rigid)	42–3016	Gearbox sprocket (19T)	1
54	B31 B33 (swinging arm)	42–3016	Gearbox sprocket (19T) (1956)	1
54	B32 B34 (rigid)	42–3016	Gearbox sprocket (19T)	1
55	B Group (swinging arm) B32 B34 (rigid)	24–4263	Gearbox sprocket locking washer	1
56	B Group (swinging arm) B32 B34 (rigid)	67–3053	Gearbox sprocket nut	1
57	B Group (swinging arm) B32 B34 (rigid)	29–3449	Gearbox inspection cover washer	1
58	B Group (swinging arm) B32 B34 (rigid)	29–3448	Gearbox inspection cover	1
59	B Group (swinging arm) B32 B34 (rigid)	2–498	Gearbox inspection cover screw	1
60	B Group (swinging arm) B32 B34 (rigid)	27–4258	Gearbox inspection cover screw	3
61	B Group (swinging arm) B32 B34 (rigid)	67–3023	Gearbox outer cover stud	4
62	B Group (swinging arm) B32 B34 (rigid)	2–4553	Oil drain plug washer (fibre)	1
63	B Group (swinging arm) B32 B34 (rigid)	28–243	Gearbox drain plug	1
64	B Group (swinging arm) B32 B34 (rigid)	67–3119	Gearbox control cam plate plunger	1
65	B Group (swinging arm) B32 B34 (rigid)	67–3121	Gear control cam plate plunger spring	1
66	B Group (swinging arm) B32 B34 (rigid)	67–3122	Gear control cam plate plunger housing nut	1
67	B Group (swinging arm) B32 B34 (rigid)	67–3120	Gear control cam plate plunger housing	1
68	B Group (swinging arm) B32 B34 (rigid)	67–3327	Gear cam plate pivot pin	1
69	B Group (swinging arm) B32 B34 (rigid)	67–3204	Gear shifter fork	2
70	B Group (swinging arm) B32 B34 (rigid)	65–3337	Layshaft bush	1
71	B Group (swinging arm) B32 B34 (rigid)	67–3101	Layshaft gear locating ring	1
72	B Group (swinging arm) B32 B34 (rigid)	42–3018	Layshaft complete with gear (17T) (1954/5)	1
72	B31 B33 (swinging arm)	42–3018	Layshaft complete with gear (17T) (1956)	1
72	B32 B34 (swinging arm)	42–3080	Layshaft complete with gear (17T) (1956)	1
—	B Group (swinging arm) B32 B34 (rigid)	42–3019	Layshaft only (1954/5)	1
—	B31 B33 (swinging arm)	42–3019	Layshaft only (1956)	1
—	B32 B34 (swinging arm)	42–3094	Layshaft only (1956)	1
73	B Group (swinging arm) B32 B34 (rigid)	2–49	Kickstarter quadrant stop nut	1
74	B Group (swinging arm) B32 B34 (rigid)	24–8784	Kickstarter quadrant stop washer	1
75	B Group (swinging arm) B32 B34 (rigid)	67–3151	Kickstarter spindle bush	1

GEARBOX

B Group Swinging Arm Frame
B32 B34 Rigid Frame (Competition)

Plate Ref. Number.	Models.	Part No.	Description.	Number per set.
76	B Group (swinging arm) B32 B34 (rigid)	67–3152	Kickstarter quadrant stop	1
77	B Group (swinging arm) B32 B34 (rigid)	67–3178	Kickstarter crank spindle assembly (1954/5) (use 67–3374)	1
77	B Group (swinging arm)	67–3374	Kickstarter crank sandle assembly (1956)	1
78	B Group (swinging arm) B32 B34 (rigid)	67–3088	Speedometer driving gear (6T)	1
79	B Group (swinging arm) B32 B34 (rigid)	65–3377	Speedometer gear bush	1
80	B Group (swinging arm) B32 B34 (rigid)	67–3175	Speedometer driven gear (11T)	1
81	B Group (swinging arm) B32 B34 (rigid)	65–3375	Speedometer driven gear thrust washer	1
82	B Group (swinging arm) B32 B34 (rigid)	65–3390	Speedometer driven gear bush	1
83	B Group (swinging arm) B32 B34 (rigid)	65–3392	Speedometer driven gear bush washer (fibre)	1
84	B Group (swinging arm) B32 B34 (rigid)	65–3391	Speedometer driven gear bush nut	1
85	B Group (swinging arm) B32 B34 (rigid)	67–3173	Kickstarter spindle sleeve	1
86	B Group (swinging arm) B32 B34 (rigid)	67–3153	Kickstarter lever spindle bush	1
87	B Group (swinging arm) B32 B34 (rigid)	2–3718	Kickstarter spring screw	1
88	B Group (swinging arm) B32 B34 (rigid)	67–3174	Kickstarter spring	1
89	B Group (swinging arm) B32 B34 (rigid)	42–3020	Layshaft gear (17T) (1954/5)	1
89	B31 B33 (swinging arm)	42–3020	Layshaft gear (17T) (1956)	1
89	B32 B34 (swinging arm)	42–3081	Layshaft gear (17T) (1956)	1
90	B Group (swinging arm)	42–3023	Layshaft sliding gear (23T) (1954/5)	1
90	B31 B33 (swinging arm)	42–3023	Layshaft sliding gear (23T) (1956)	1
90	B32 B34 (rigid)	42–3025	Layshaft sliding gear (26T)	1
90	B32 B34 (swinging arm)	42–3025	Layshaft sliding gear (26T) (1956)	1
—	B32 B34 (swinging arm)	42–3075	Layshaft needle roller bearing (1956)	1
—	B32 B34 (swinging arm)	42–3074	Layshaft needle roller bearing (1956)	1
—	B32 B34 (swinging arm)	42–3078	Layshaft thrust washer (clutch end) (1956)	1
—	B32 B34 (swinging arm)	42–3079	Layshaft thrust washer (cover end) (1956)	1
—	B32 B34 (swinging arm)	42–3095	Layshaft circlip (1956)	1
—	B Group (swinging arm)	67–1709	Speedo driven gear retaining pin washer (1956)	1
90	B32 B34 (swinging arm)	67–3212	Layshaft sliding gear (21T) (1956)	1
90	B32 B34 (rigid)	67–3212	Layshaft sliding gear (21T)	1
91	B Group (swinging arm)	67–3198	Layshaft sliding gear (19T) (1954/5)	1
91	B31 B33 (swinging arm)	67–3198	Layshaft sliding gear (19T) (1956)	1
92	B Group (swinging arm) B32 B34 (rigid)	67–3203	Layshaft thrust washer	1
93	B Group (swinging arm)	67–3199	Layshaft gear complete (27T) (1954/5)	1
93	B31 B33 (swinging arm)	67–3199	Layshaft gear complete (1956)	1
93	B32 B34 (swinging arm)	42–3093	Layshaft gear complete (1956)	1
93	B32 B34 (rigid)	67–3213	Layshaft gear complete (29T)	1
94	B Group (swinging arm) B32 B34 (rigid)	67–3093	Layshaft gear bush	1
95	B Group (swinging arm) B32 B34 (rigid)	67–3128	Speedometer gear layshaft peg	1
96	B Group (swinging arm) B32 B34 (rigid)	67–3099	Layshaft bush (1954/5)	1
96	B31 B33 (swinging arm)	67–3099	Layshaft bush (1956)	1
97	B Group (swinging arm) B32 B34 (rigid)	66–3074	Dowel	2
98	B Group (swinging arm) B32 B34 (rigid)	67–3354	Gearbox outer cover joint washer (paper)	1
99	B Group (swinging arm) B32 B34 (rigid)	2–4553	Oil level plug washer (fibre)	1
100	B Group (swinging arm) B32 B34 (rigid)	28–243	Oil level plug	1
101	B Group (swinging arm) B32 B34 (rigid)	67–3351	Gearbox outer cover complete	1

Plate 6—*continued* GEARBOX

B Group Swinging Arm Frame
B32 B34 Rigid Frame (Competition)

Plate Ref. Number.	Models.	Part No.	Description.	Number per set.
102	B Group (swinging arm) B32 B34 (rigid)	27–4401	Kickstarter spring screw locknut	1
103	B Group (swinging arm) B32 B34 (rigid)	67–1705	Outer cover fixing screw (short)	1
104	B Group (swinging arm) B32 B34 (rigid)	28–2080	Grease nipple	1
105	B Group (swinging arm) B32 B34 (rigid)	2–923	Outer cover fixing nut washer	4
106	B Group (swinging arm) B32 B34 (rigid)	67–3034	Outer cover fixing nut	4
107	B Group (swinging arm) B32 B34 (rigid)	67–3176	Speedometer driven gear retaining pin	1
108	B Group (swinging arm) B32 B34 (rigid)	15–4240	Gear change operating spindle circlip	1
109	B Group (swinging arm) B32 B34 (rigid)	67–3033	Inspection cover joint washer (fibre)	1
110	B Group (swinging arm) B32 B34 (rigid)	67–3024	Inspection cover	1
111	B Group (swinging arm) B32 B34 (rigid)	2–2579	Kickstarter crank cotter	1
112	B Group (swinging arm) B32 B34 (rigid)	24–7178	Inspection cover fixing screw	2
113	B Group (swinging arm) B32 B34 (rigid)	15–5155	Kickstarter crank cotter washer (plain)	1
114	B Group (swinging arm) B32 B34 (rigid)	2–2578	Kickstarter crank cotter nut	1
115	B31 B33 (swinging arm)	65–3381	Kickstarter pedal	1
116	B Group (swinging arm) B32 B34 (rigid)	65–3397	Kickstarter pedal rubber	1
—	B32 B34 (swinging arm) B32 B34 (rigid)	42–3037	Kickstarter crank complete (folding type)	1
117	B32 B34 (swinging arm) B32 B34 (rigid)	42–3038	*Kickstarter crank only (folding type)	1
118	B32 B34 (swinging arm) B32 B34 (rigid)	65–3427	Kickstarter crank pedal (folding type)	1
119	B32 B34 (swinging arm) B32 B34 (rigid)	66–4707	Kickstarter pedal washer (shakeproof)	1
120	B32 B34 (swinging arm) B32 B34 (rigid)	29–5156	Kickstarter pedal bolt	1
121	B32 B34 (swinging arm) B32 B34 (rigid)	65–3428	Kickstarter pedal spring	1
122	B32 B34 (swinging arm) B32 B34 (rigid)	2–220	Kickstarter crank spring bolt	1
123	B32 B34 (swinging arm) B32 B34 (rigid)	29–541	Kickstarter crank spring bolt washer (shakeproof)	1

*Not supplied separately.

Plate 7 CLUTCH and FRONT CHAINCASE

B31 B33 Rigid and Spring Frame

Plate Ref. Number.	Models.	Part No.	Description.	Number per set.
—	B31	65–3938	Clutch complete	1
—	B33	66–3902	Clutch complete	1
1	B31 B33	65–7594	Front chaincase with fixed fittings	1
2	B31 B33	2–930	Oil level drain plug washer (fibre)	1
3	B31 B33	66–7517	Oil level plug	1

Plate 7

CLUTCH and FRONT CHAINCASE

B31 B33 Rigid and Spring Frame

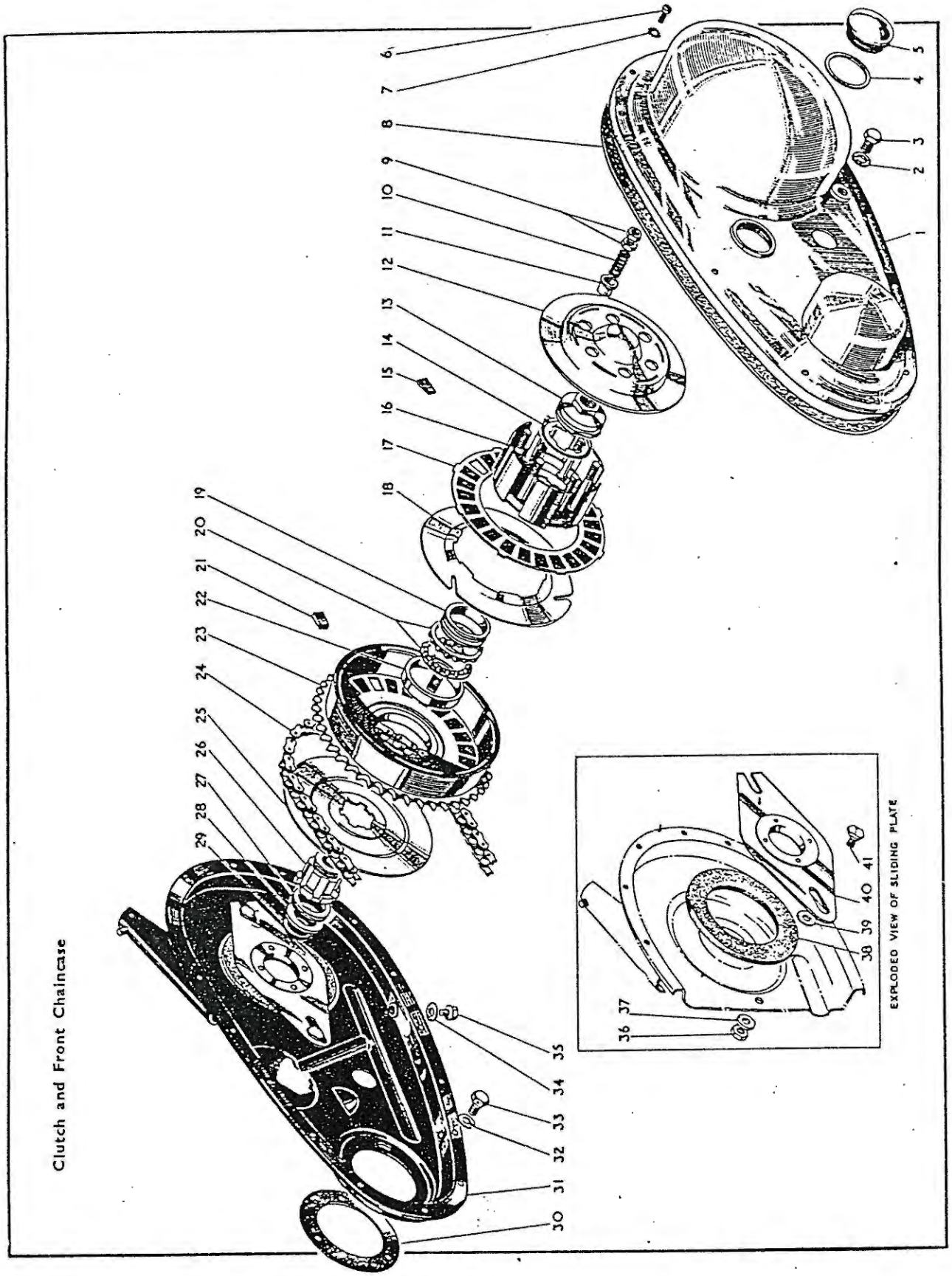

Plate 7—*continued* CLUTCH and FRONT CHAINCASE

B31 B33 Rigid and Spring Frame

Plate Ref. Number.	Models.	Part No.	Description.	Number per set.
4	B31 B33	67–42	Front chaincase inspection cap washer (fibre)	1
5	B31 B33	65–3364	Front chaincase inspection cap	1
6	B31 B33	1–4606	Chaincase fixing screw	16
7	B31 B33	29–3319	Chaincase fixing screw washer	16
8	B31 B33	66–7514	Chaincase joint washer (cork)	1
9	B31 B33	2–2395	Clutch spring retaining stud nut	12
10	B31 B33	66–3800	Clutch spring	6
11	B31 B33	66–3781	Clutch spring cup	6
12	B31 B33	65–3828	Clutch actuating cap complete	1
13	B31 B33	66–3787	Mainshaft nut	1
14	B31 B33	65–3822	Mainshaft nut locking washer	1
15	B31	65–3858	Clutch plate ferodo insert	72
15	B33	65–3858	Clutch plate ferodo insert	96
16	B31	66–3906	Clutch driving plate centre complete with studs	1
16	B33	66–3903	Clutch driving plate centre complete with studs	1
17	B31	65–3857	Clutch driving plate complete with inserts	3
17	B33	65–3857	Clutch driving plate complete with inserts	4
18	B31	29–3832	Clutch driven plate	1
18	B31	65–3824	Clutch driven plate	2
18	B33	65–3824	Clutch driven plate	4
19	B31 B33	65–3911	Clutch ballrace inner ring	1
20	B31 B33	65–3910	Clutch ballrace retaining ring complete with balls	2
21	B31	65–3811	Clutch chainwheel cork insert	24
21	B33	66–3891	Clutch chainwheel ferodo insert	24
22	B31 B33	65–3912	Clutch ballrace ring	1
23	B31	65–3922	Clutch chainwheel complete	1
23	B33	66–3908	Clutch chainwheel complete	1
24	B31	24–8931	Transmission chain (front)	1
24	B33	24–8932	Transmission chain (front)	1
25	B31 B33	65–3872	Clutch plate	1
26	B31 B33	65–3873	Clutch sleeve	1
27	B31 B33	65–3833	Clutch sleeve collar	1
28	B31 B33	7–3090	Gearbox and chaincase oil retaining washer	1
29	B31 B33	7–4232	Gearbox felt washer	1
30	B31 B33	66–7575	Chaincase and crankcase joint washer (Hallite)	1
31	B31 B33	65–7578	Chaincase back with sliding plate	1
32	B31 B33	24–8784	Chaincase securing bolt spring washer	3
33	B31 B33	65–7550	Chaincase securing bolt	3
34	B31 B33	66–7518	Oil level drain plug washer (fibre)	1
35	B31 B33	15–645	Oil level drain plug	1
36	B31 B33	2–443	Chaincase sliding plate bolt nut	2
37	B31 B33	2–1374	Chaincase sliding plate bolt washer	2
38	B31 B33	15–8814	Chaincase back felt washer	1
39	B31 B33	66–7518	Chaincase sliding plate bolt washer (fibre)	2
40	B31 B33	66–7520	Chaincase sliding plate complete	1
41	B31 B33	66–7523	Chaincase sliding plate bolt	2

Plate 8 CLUTCH and FRONT CHAINCASE

B Group Swinging Arm Frame
B32 B34 Rigid Frame (Competition)

Plate Ref. Number.	Models.	Part No.	Description.	Number per set.
—	B31 (swinging arm)	65–3938	Clutch complete (1954/5)	1
—	B31 (swinging arm)	42–3112	Clutch complete (1956) (43T)	1
—	B33 (swinging arm)	42–3113	Clutch complete (1956) (43T)	1
—	B32 B34 (swinging arm)	42–3059	Clutch complete (1956) (43T)	1
—	B32 B34 (swinging arm)	42–3053	Clutch complete (1956) (44T) (as required)	1
—	B32 B33 B34 (swinging arm)	66–3902	Clutch complete (1954/5)	1

B Group Swinging Arm Frame
B32 B34 Rigid Frame (Competition)

Plate Ref. Number.	Models.	Part No.	Description.	Number per set.
—	B32 B34 (rigid)	42-3052	Clutch complete	1
1	B Group (swinging arm) B32 B34 (rigid)	67-1706	Primary chaincase front fixing screw	3
1	B Group (swinging arm) B32 B34 (rigid)	67-1711	Primary chaincase oil level and drain screw	2
2	B Group (swinging arm) B32 B34 (rigid)	67-1709	Primary chaincase oil level and drain screw washer (fibre)	2
3	B Group (swinging arm) B32 B34 (rigid)	65-3063	Primary chaincase front fixing screw	7
4	B Group (swinging arm) B32 B34 (rigid)	2-2395	Clutch spring retaining stud nut	12
5	B Group (swinging arm) B32 B34 (rigid)	66-3800	Clutch spring	6
6	B Group (swinging arm) B32 B34 (rigid)	66-3781	Clutch spring cup	6
7	B Group (swinging arm)	65-3828	Clutch actuating cap complete (1954/5)	1
7	B31 B33 (swinging arm)	65-3828	Clutch actuating cap complete (1956)	1
7	B32 B34 (rigid)	42-3056	Clutch actuating cap complete	1
7	B32 B34 (swinging arm)	42-3056	Clutch actuating cap complete (1956)	1
8	B31 (swinging arm)	65-3858	Clutch plate ferodo insert	72
8	B32 B33 B34 (swinging arm)	65-3858	Clutch plate ferodo insert (1954/5)	96
8	B33 (swinging arm)	65-3858	Clutch ferodo plate inserts (1956)	96
8	B32 B34 (rigid)	65-3858	Clutch plate ferodo insert	120
8	B32 B34 (swinging arm)	42-3063	Clutch ferodo plate inserts (1956)	120
9	B Group (swinging arm) B32 B34 (rigid)	65-3911	Clutch ballrace inner ring	1
10	B Group (swinging arm) B32 B34 (rigid)	65-3910	Clutch ballrace retaining ring	2
11	B31 (swinging arm)	65-3811	Clutch chainwheel cork insert (1954/6)	24
11	B33 (swinging arm)	66-3891	Clutch chainwheel ferodo inserts (1956)	24
11	B32 B33 B34 (swinging arm) B32 B34 (rigid)	66-3891	Clutch chainwheel ferodo inserts (1954/5)	24
11	B32 B34 (swinging arm)	42-3061	Clutch chainwheel ferodo inserts (1956	24
12	B31 B32 (swinging arm) B32 (rigid)	24-8716	Primary chain	1
12	B33 (swinging arm)	24-8930	Primary chain	1
12	B34 (swinging arm)	24-8930	Primary chain (1954/5)	1
12	B34 (rigid and swinging arm)	24-8931	Primary chain	1
13	B Group (swinging arm) B32 B34 (rigid)	65-3873	Clutch sleeve (1954/5)	1
13	B31 B33 (swinging arm)	42-3107	Clutch sleeve (1956)	1
13	B32 B34 (swinging arm)	65-3873	Clutch sleeve (1956)	1
14	B Group (swinging arm) B32 B34 (rigid)	65-3833	Clutch sleeve collar	1
15	B Group (swinging arm) B32 B34 (rigid)	66-7523	Primary chaincase sliding plate bolt (1954/5)	2
15	B31 B33 (swinging arm)	42-7520	Primary chaincase sliding plate bolt (1956)	2
15	B32 B34 (swinging arm)	66-7523	Primary chaincase sliding plate bolt (1956)	2
16	B Group (swinging arm) B32 B34 (rigid)	2-1462	Primary chaincase sliding plate bolt washer (spring)	2
17	B Group (swinging arm) B32 B34 (rigid)	2-443	Primary chaincase sliding plate bolt nut (1954/5)	2
17	B31 B33 (swinging arm)	2-2395	Primary chaincase sliding plate bolt nut (1956)	2
17	B32 B34 (swinging arm)	2-443	Primary chaincase sliding plate bolt nut (1956)	2
18	B Group (swinging arm)	65-109	Primary chaincase back fixing bolt (1954/5)	1
18	B31 B33 (swinging arm)	2-6026	Primary chaincase back fixing bolt (1956)	2
18	B32 B34 (rigid)	27-6312	Primary chaincase back fixing bolt	1
18	B32 B34 (swinging arm)	65-109	Primary chaincase back fixing bolt (1956)	2
19	B Group (swinging arm)	15-7563	Primary chaincase back fixing bolt distance collar (1954/5)	1
19	B31 B33 (swing ng arm)	42-4792	Primary chaincase back fixing bolt distance collar (1956)	1
19	B32 B34 (swinging arm)	15-7563	Primary chaincase back fixing bolt distance collar (1956)	1
19	B32 B34 (rigid)	2-923	Primary chaincase back fixing bolt distance washer	1
19	B31 B33 (swinging arm)	2-923	Primary chaincase back fixing bolt washer	1
20	B Group (swinging arm)	35-33	Primary chaincase back fixing bolt washer (spring)	1
20	B32 B34 (rigid)	24-8784	Primary chaincase back fixing bolt washer (spring)	1

Plate 8

CLUTCH and FRONT CHAINCASE

B Group Swinging Arm Frame
B32 B34 Rigid Frame (Competition)

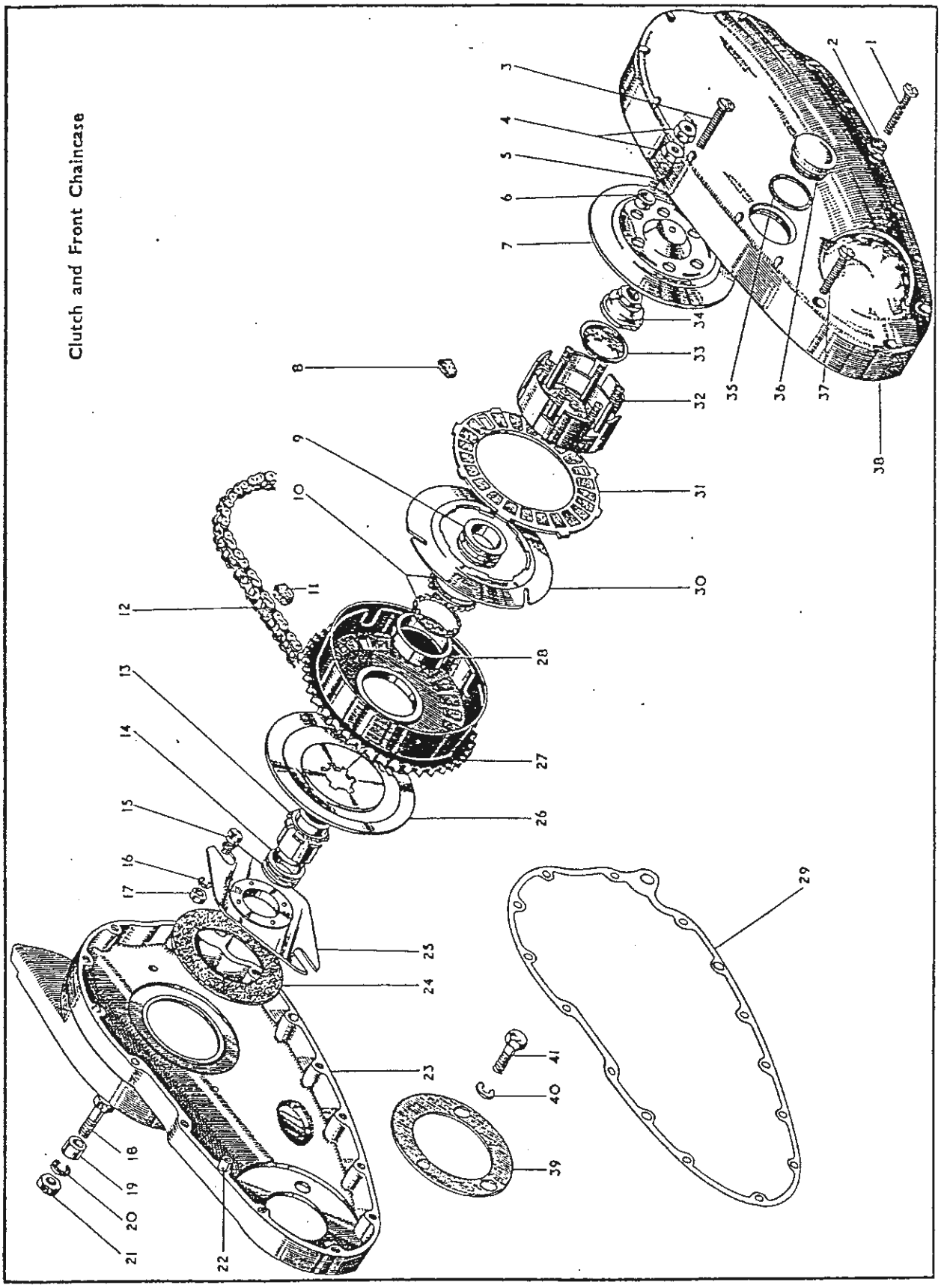

Frame and Fittings
Front Fork and Fittings
Front Hub and Wheel Fittings
Rear Hub and Wheel Fittings
Mudguards Chainguard Toolbox etc.
Mudguards Chainguard Oil Tank etc.
Mudguards Oil Tank and Rear Chainguard
Mudguards Chainguard Handrail etc.
Petrol Tank Handlebar Rear Brake
Handlebar Petrol Tank Dual Seat etc.
Petrol Tank Front Mudguard
Safety Bar Carrier Handrail
Lampshields
Tools and Sundries
Electrics Equipment
Carrier and Panniers

CLUTCH and FRONT CHAINCASE

B Group Swinging Arm Frame
B32 B34 Rigid Frame (Competition)

Plate Ref. Number.	Models.	Part No.	Description.	Number per set.
21	B Group (swinging arm) B32 B34 (rigid)	2–49	Primary chaincase back fixing bolt nut	1
22	B Group (swinging arm) B32 B34 (rigid)	66–3074	Primary chaincase dowel	2
23	B Group (swinging arm)	42–7502	Primary chaincase (back) (1954/5)	1
23	B31 B33 (swinging arm)	42–7514	Primary chaincase (back) (1956)	1
23	B32 B34 (rigid)	42–7512	Primary chaincase (back)	1
23	B32 B34 (swinging arm)	42–7502	Primary chaincase (back) (1956)	1
24	B Group (swinging arm) B32 B34 (rigid)	42–7504	Primary chaincase back washer (felt)	1
25	B Group (swinging arm) B32 B34 (rigid)	66–7520	Primary chaincase sliding plate complete	1
26	B Group (swinging arm) B32 B34 (rigid)	65–3872	Clutch plate	1
27	B31 (swinging arm)	65–3922	Clutch chainwheel complete (43T)	1
27	B32 B33 B34 (swinging arm)	42–3054	Clutch chainwheel complete (1954/5)	1
27	B33 (swinging arm)	66–3908	Clutch chainwheel complete (43T) (1956)	1
27	B32 B34 (rigid)	66–3908	Clutch chainwheel complete	1
27	B32 B34 (swinging arm)	42–3060	Clutch chainwheel complete (43T) (1956)	1
—	B31 B33 (swinging arm)	42–7519	Chaincase and crankcase joint washer	2
28	B Group (swinging arm) B32 B34 (rigid)	65–3912	Clutch ballrace ring	1
29	B Group (swinging arm) B32 B34 (rigid)	42–7507	Primary chaincase joint washer (paper)	1
30	B31 (swinging arm)	65–3824	Clutch driven plate	2
30	B31 (swinging arm)	29–3832	Clutch driven plate (1954/5)	1
30	B Group (swinging arm)	29–3832	Clutch driven plate (1956)	1
30	B32 B33 B34 (swinging arm)	65–3824	Clutch driven plate (1954/5)	4
30	B32 B34 (rigid)	65–3824	Clutch driven plate	5
30	B32 B34 (swinging arm)	65–3824	Clutch driven plate (1956)	4
30	B33 (swinging arm)	65–3824	Clutch driven plate	3
31	B31 (swinging arm)	65–3857	Clutch driving plate with inserts	3
31	B32 B33 B34 (swinging arm)	65–3857	Clutch driving plate with inserts (1954/5)	4
31	B33 (swinging arm)	65–3857	Clutch driving plate with ferodo inserts (1956)	4
31	B32 B34 (rigid)	65–3857	Clutch driving plate with inserts	5
31	B32 B34 (swinging arm)	42–3062	Clutch driving plate with ferodo inserts (1956)	5
32	B31 (swinging arm)	66–3906	Clutch driving plate centre with studs	1
32	B32 B33 B34 (swinging arm) B32 B34 (rigid)	66–3903	Clutch driving plate centre with studs	1
33	B Group (swinging arm) B32 B34 (rigid)	65–3822	Mainshaft nut locking washer	1
34	B Group (swinging arm) B32 B34 (rigid)	66–3787	Mainshaft nut	1
35	B Group (swinging arm) B32 B34 (rigid)	67–42	Primary chaincase inspection cap washer (fibre)	1
36	B Group (swinging arm) B32 B34 (rigid)	65–3364	Primary chaincase inspection cap	1
37	B Group (swinging arm) B32 B34 (rigid)	42–7508	Primary chaincase front fixing screw	3
38	B Group (swinging arm) B32 B34 (rigid)	42–7506	Primary chaincase (front)	1
39	B Group (swinging arm) B32 B34 (rigid)	66–7575	Primary chaincase and crankcase joint washer	1
40	B Group (swinging arm) B32 B34 (rigid)	24–8784	Primary chaincase back securing bolt washer (spring)	3
41	B Group (swinging arm)	67–4028	Primary chaincase back securing bolt (1954/5)	3
41	B32 B34 (rigid)	65–7550	Primary chaincase back securing bolt	3
41	B31 B33 (swinging arm)	42–7516	Primary chaincase back securing bolt (1956)	3
41	B32 B34 (swinging arm)	67–4028	Primary chaincase back securing bolt (1956)	3

FRAME and FITTINGS

B31 B33 Rigid and Spring Frame

Plate Ref. Number.	Models.	Part No.	Description.	Number per set.
1	B31 B33	29–7551	Footrest rubber	2
2	B31 B33	65–4891	Footrest bracket (offside)	1
3	B31 B33	24–5914	Footrest washer (plain)	2
4	B31 B33	65–695	Footrest washer (shakeproof)	2
5	B31 B33	15–5753	Footrest nut	2
6	B31 B33 (rigid)	2–46	Engine plate and chainstay nuts	19
6	B31 B33 (spring)	2–46	Engine plate and chainstay nuts	17
7	B31 B33 (rigid)	27–5684	Engine plate and front down tube stud	7
7	B31 B33 (spring)	27–5684	Engine plate and front down tube stud	7
8	B31 B33	65–4429	Engine plate (front) (offside)	1
9	B31 B33	27–5683	Engine plate down tube and exhaust pipe stud	1
9	B32 B34	27–5683	Engine plate and front down tube stud (when crankcase shield is fitted)	1
10	B31 B33	65–9196	Air cleaner	1
11	B31 B33	66–4149	Ball head cup	2
12	B31 B33	1–4675	Ball head cup steel balls	40
13	B31 B33	28–2080	Grease nipple	1
14	B31 B33	2–14	Air cleaner elbow bolt	1
15	B33	65–1237	Air cleaner adaptor	1
15	B31	65–1212	Air cleaner adaptor	1
16	B31 B33	29–541	Air cleaner elbow bolt washer	1
17	B31 B33	65–9198	Air cleaner elbow	1
18	B31 B33	65–4654	Frame front	1
19	B31 B33	33–4089	Saddle front connecting bolt	1
20	B31 B33 (rigid)	35–698	Saddle front connecting bolt split pin	1
21	B31 B33	28–2080	Saddle front connecting bolt grease nipple	1
22	B31 B33	66–2810	Saddle front connecting bolt nut	1
23	B31 B33	65–4488	Seat lug and backstay locating tube	1
24	B31 B33	15–431	Seat lug and backstay washer (nearside)	1
25	B31 B33	2–1925	Seat lug and backstay stud nut (nearside)	1
26	B31 B33 (rigid)	2–923	Saddle rear fixing stud washer (centre)	2
26	B31 B33 (spring)	2–923	Saddle rear spring stud washer	4
27	B31 B33 (rigid)	2–49	Saddle rear fixing stud nut (centre)	2
27	B31 B33 (spring)	2–49	Saddle rear fixing stud nut	4
28	B31 B33 (rigid)	66–4647	Saddle rear fixing stud	2
28	B31 B33 (spring)	67–4040	Saddle rear fixing stud	2
29	B31 B33 (rigid)	2–923	Saddle rear fixing stud washer (top)	2
30	B31 B33 (rigid)	2–49	Saddle rear fixing stud nut (top)	2
31	B31 B33 (rigid)	65–6897	Carrier	1
32	B31 B33	2–2395	Carrier fixing screw nut	4
33	B31 B33	2–1462	Carrier fixing screw washer	4
34	B31 B33	15–7161	Carrier fixing screw	4
35	B31 B33 (rigid)	2–49	Saddle rear fixing stud nut (bottom)	2
36	B31 B33 (rigid)	2–923	Saddle rear fixing stud washer (bottom)	2
37	B31 B33	65–4890	Footrest bracket (nearside)	1
38	B31 B33	66–4902	Footrest washer (cork)	2
39	B31 B33	66–4903	Chaincase distance sleeve	2
40	B31 B33	65–4519	Gearbox engine plate (nearside)	1
41	B31 B33	66–4175	Backstay and seat lug stud	1
42	B31 B33	15–431	Seat lug and backstay washer (offside)	1
43	B31 B33	2–1925	Seat lug and backstay stud nut (nearside)	1
44	B31 B33	65–4429	Engine plate front (nearside)	1
45	B31 B33	65–4431	Engine plate cover (front)	1
46	B31 B33	2–522	Engine plate, chainstay and seat tube washer	19
47	B31 B33	66–4163	Engine plate, chainstay and seat tube stud	1
48	B31 B33	65–4189	Gearbox connecting bolt washer (serrated)	2
49	B31 B33	2–522	Gearbox connecting bolt washer (spring)	2
50	B31 B33	2–46	Gearbox connecting bolt nut	2
51	B31 B33 (rigid)	67–4032	Rear brake pedal and anchor strap stud	2
51	B31 B33 (spring)	67–4032	Rear brake pedal anchor stud	1
52	B31 B33	36–382	Prop stand clip bolt washer	2
53	B31 B33	28–2338	Prop stand clip bolt	2
54	B31 B33	24–6040	Pillion footrest swivel bolt nut	2
55	B31 B33	36–382	Pillion footrest swivel bolt washer	2
56	B31 B33	29–7561	Pillion footrest only	2

Plate 9

FRAME and FITTINGS

B31 B33 Rigid and Spring Frame

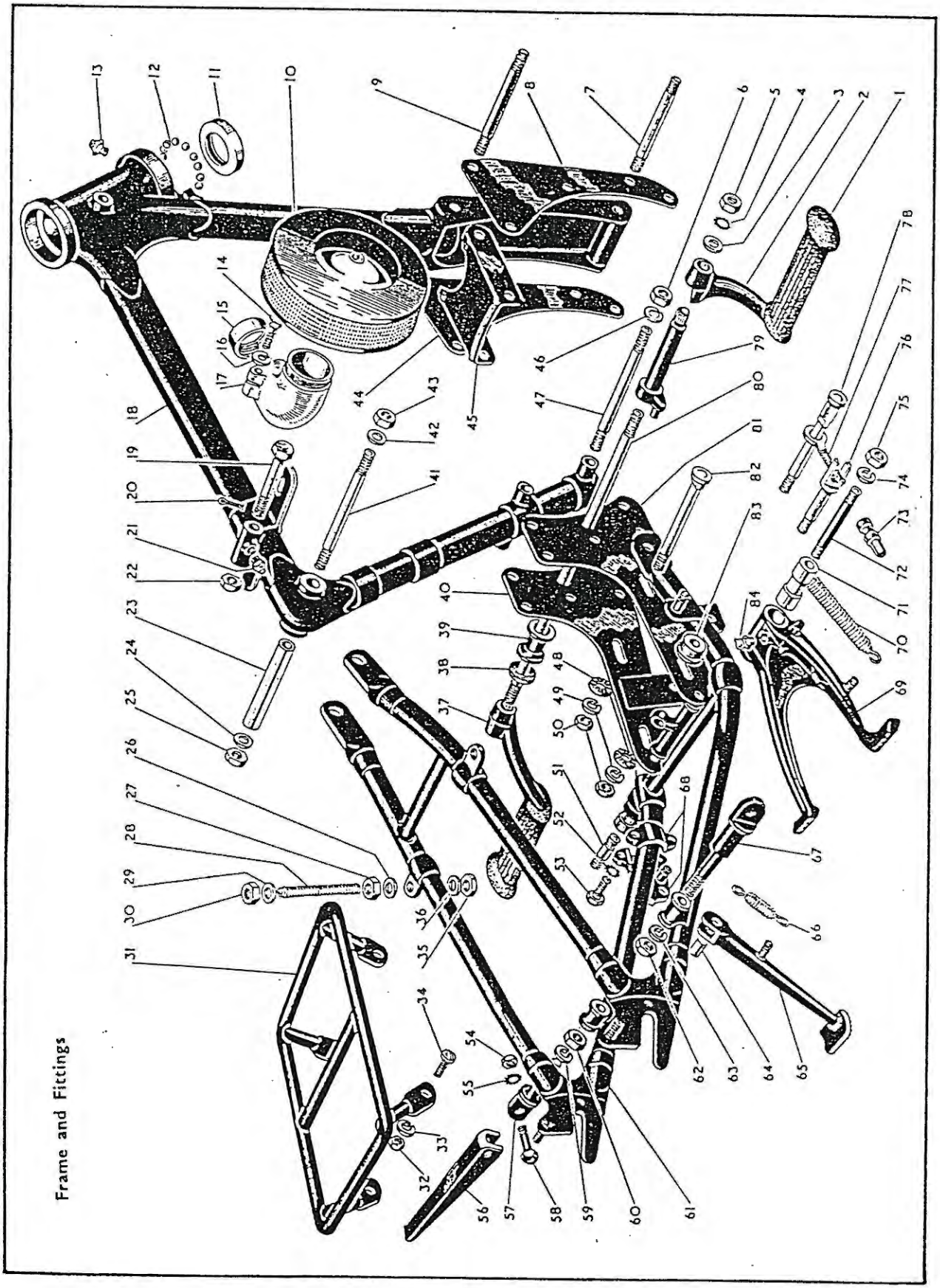

Plate 9—*continued* FRAME and FITTINGS

B31 B33 Rigid and Spring Frame

Plate Ref. Number.	Models.	Part No.	Description.	Number per set.
56*	B31 B33	29–7581	Pillion footrest	2
—*	B31 B33	29–7583	Pillion footrest rubber	2
—	B31 B33	65–4928	Pillion footrest complete assembly	2
57	B31 B33	65–4895	Pillion footrest anchor bolt (nearside)	1
58	B31 B33	29–7564	Pillion footrest swivel bolt	2
59	B31 B33 (rigid)	2–522	Pillion footrest anchor bolt washer (nearside)	1
60	B31 B33 (rigid)	2–1813	Pillion footrest anchor bolt nut (nearside)	1
60	B31 B33 (spring)	2–46	Pillion footrest anchor bolt nut (nearside)	1
61	B31 B33 (rigid)	65–4511	Chainstay and backstay complete	1
62	B31 B33	2–46	Pillion footrest anchor bolt nut (offside)	1
63	B31 B33 (rigid)	2–522	Pillion footrest anchor bolt washer (offside)	1
64	B31 B33	65–4741	Prop stand pivot pin	1
65	B31 B33	65–4735	Prop stand leg	1
66	B31 B33	65–4742	Prop stand spring	1
67	B31 B33 (rigid)	65–4894	Pillion footrest anchor bolt (offside)	1
67	B31 B33 (spring)	65–4895	Pillion footrest anchor bolt (nearside)	1
68	B31 B33 (rigid)	65–4739	Prop stand lug	1
69	B31 B33	65–4755	Central stand	1
70	B31 B33	65–4727	Central stand spring	1
71	B31 B33	29–4840	Central stand engine plate distance piece	1
72	B31 B33	65–4728	Central stand stud	1
73	B31 B33	15–5664	Gearbox adjusting bolt nut	1
74	B31 B33	2–1967	Central stand stud spring washer	2
75	B31 B33	2–1925	Central stand stud nut	2
76	B31 B33	65–4596	Rear engine plate and chainstay bridge bolt	1
77	B31 B33	27–5710	Gearbox adjusting bolt	1
78	B31 B33	66–4168	Gearbox connecting bolt (rear)	1
79	B31 B33	65–4811	Footrest rod distance tube	2
80	B31 B33	66–4900	Footrest rod	1
81	B31 B33	65–4517	Gearbox engine plate (offside)	1
82	B31 B33	15–476	Gearbox connecting bolt (front)	1
83	B31 B33	66–4169	Gearbox connecting bolt collar	1
84	B31 B33	28–2080	Central stand grease nipple	1

*For illustration see plate 12.

Note : B31 B33 (rigid). For rear brake pedal see rear suspension illustration.

Plate 10 REAR SUSPENSION

B31 B33 Spring Frame

Plate Ref. Number.	Models.	Part No.	Description.	Number per set.
1	B31 B33	3–1399	Plunger carrier column bolt or suspension bottom bracket bolt (nearside)	1
2	B31 B33	2–46	Plunger carrier column bolt nut	4
3	B31 B33	66–4707	Plunger carrier column bolt washer (shakeproof)	4
4	B31 B33	67–4129	Plunger carrier bottom clip and silencer support bolt distance piece	2
5	B31 B33	67–4128	Plunger carrier bottom clip and silencer support bolt	1
6	B31 B33	36–382	Plunger carrier bottom clip and silencer support bolt washer (shakeproof)	1
7	B31 B33	2–49	Plunger carrier bottom clip and silencer support bolt nut	1
8	B31 B33	65–4741	Prop stand pivot pin	1
9	B31 B33	65–4735	Prop stand leg	1
10	B31 B33	65–4742	Prop stand spring	1
11	B31 B33	65–4743	Prop stand lug complete	1
12	B31 B33	36–382	Prop stand clip bolt washer (shakeproof)	2

Plate 10

REAR SUSPENSION

B31 B33 Spring Frame

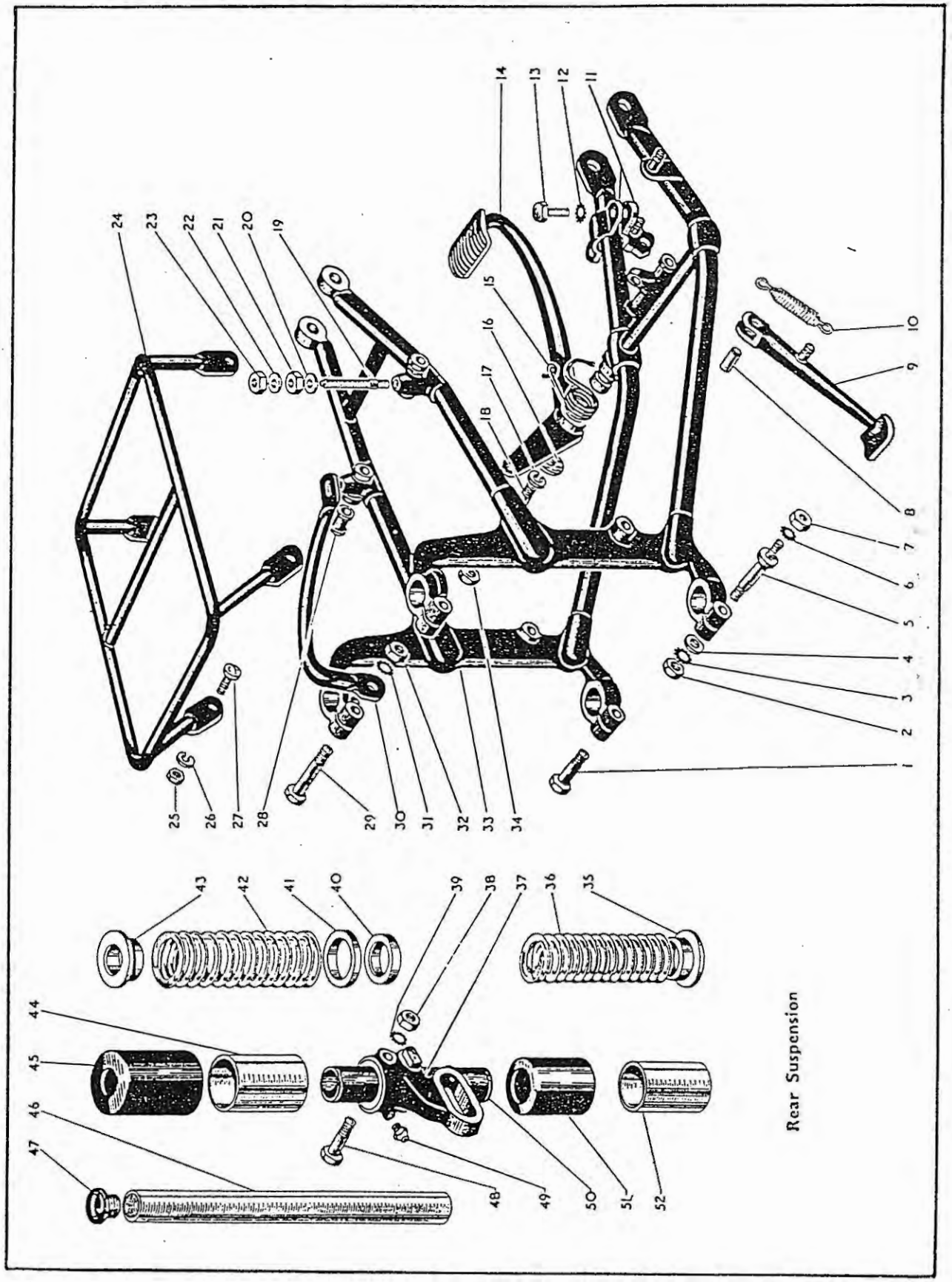

Plate 10—*continued* REAR SUSPENSION

B31 B33 Spring Frame

Plate Ref. Number.	Models.	Part No.	Description.	Number per set.
13	B31 B33	28–2338	Prop stand clip bolt	2
14	B31 B33	65–7060	Rear brake pedal	1
15	B31 B33	65–7063	Rear brake pedal return spring	1
16	B31 B33	30–196	Rear brake pedal washer (plain)	1
17	B31 B33	2–522	Rear brake pedal washer (spring)	1
18	B31 B33	67–4032	Rear brake pedal stud	1
19	B31 B33	67–4040	Saddle rear fixing stud	2
20	B31 B33	2–923	Saddle rear fixing stud washer	2
21	B31 B33	2–49	Saddle rear fixing stud nut	2
22	B31 B33	2–923	Saddle rear fixing stud washer	2
23	B31 B33	2–49	Saddle rear fixing stud nut	2
24	B31 B33	67–6921	Carrier complete	1
25	B31 B33	2–2395	Carrier fixing screw nut	4
26	B31 B33	2–1462	Carrier fixing screw washer (spring)	4
27	B31 B33	15–7161	Carrier fixing screw	4
28	B31 B33	67–6761	Horn and saddle spring distance piece	1
29	B31 B33	31–68	Plunger carrier column bolt (top)	2
30	B31 B33	67–4130	Lifting handle	1
31	B31 B33	66–4707	Plunger carrier column bolt (top) washer (shakeproof)	4
32	B31 B33	2–46	Plunger carrier column bolt (top) nut	4
33	B31 B33	65–4526	Chainstay and backstay complete	1
34	B31 B33	2–46	Rear brake pedal stud nut	1
35	B31 B33	89–4258	Rebound spring bottom collar	2
36	B31 B33	89–4259	Rebound spring bottom	2
37	B31 B33	67–4125	Rear spindle clamp lug (nearside)	1
37	B31 B33	67–4126	Rear spindle clamp lug (offside)	1
38	B31 B33	2–46	Clamp lug bolt nut	2
39	B31 B33	66–4707	Clamp lug bolt washer (shakeproof)	2
40	B31 B33	67–4127	Rebound spring top collar	2
41	B31 B33	67–4131	Plunger spring washer (bottom)	2
42	B31 B33	89–4049	Plunger spring (top)	2
43	B31 B33	89–4257	Plunger spring top collar	2
44	B31 B33	89–4249	Plunger spring inner shroud	2
45	B31 B33	89–4248	Plunger spring outer shroud	2
46	B31 B33	89–4041	Plunger carrier column assembly	2
47	B31 B33	89–4045	Plunger column screwed plug	2
48	B31 B33	3–1399	Clamp lug bolt	2
49	B31 B33	28–2080	Clamp lug grease nipple	2
50	B31 B33	89–4046	Plunger tube with bushes	2
51	B31 B33	89–4240	Rebound spring shroud (outer)	2
52	B31 B33	89–4241	Rebound spring shroud (inner)	2

Plate 11 FRAME and FITTINGS

B32 B34 Rigid Frame (Competition)

Plate Ref. Number.	Models.	Part No.	Description.	Number per set.
1	B32 B34 (rigid)	65–4727	Central stand spring	1
2	B32 B34 (rigid)	42–4714	Central stand pivot stud	1
3	B32 B34 (rigid)	42–4713	Central stand distance tube	1
4	B32 B34 (rigid)	2–1945	Central stand pivot stud washer (plain)	1
5	B32 B34 (rigid)	2–1967	Central stand pivot stud washer (spring)	1
6	B32 B34 (rigid)	24–5860	Central stand pivot stud nut	2
7	B32 B34 (rigid)	42–4821	Footrest stud complete	1
8	B32 B34 (rigid)	42–4823	Footrest distance tube complete (offside)	1
9	B32 B34 (rigid)	42–4820	Footrest bracket (offside)	1
10	B32 B34 (rigid)	65–4182	Rear engine and gearbox stud (bottom rear)	1
11	B32 B34 (rigid)	2–1733	Rear engine and gearbox stud washer (plain)	4
12	B32 B34 (rigid)	2–522	Rear engine and gearbox stud washer (spring)	4

Plate 11

FRAME and FITTINGS

B32 B34 Rigid Frame (Competition)

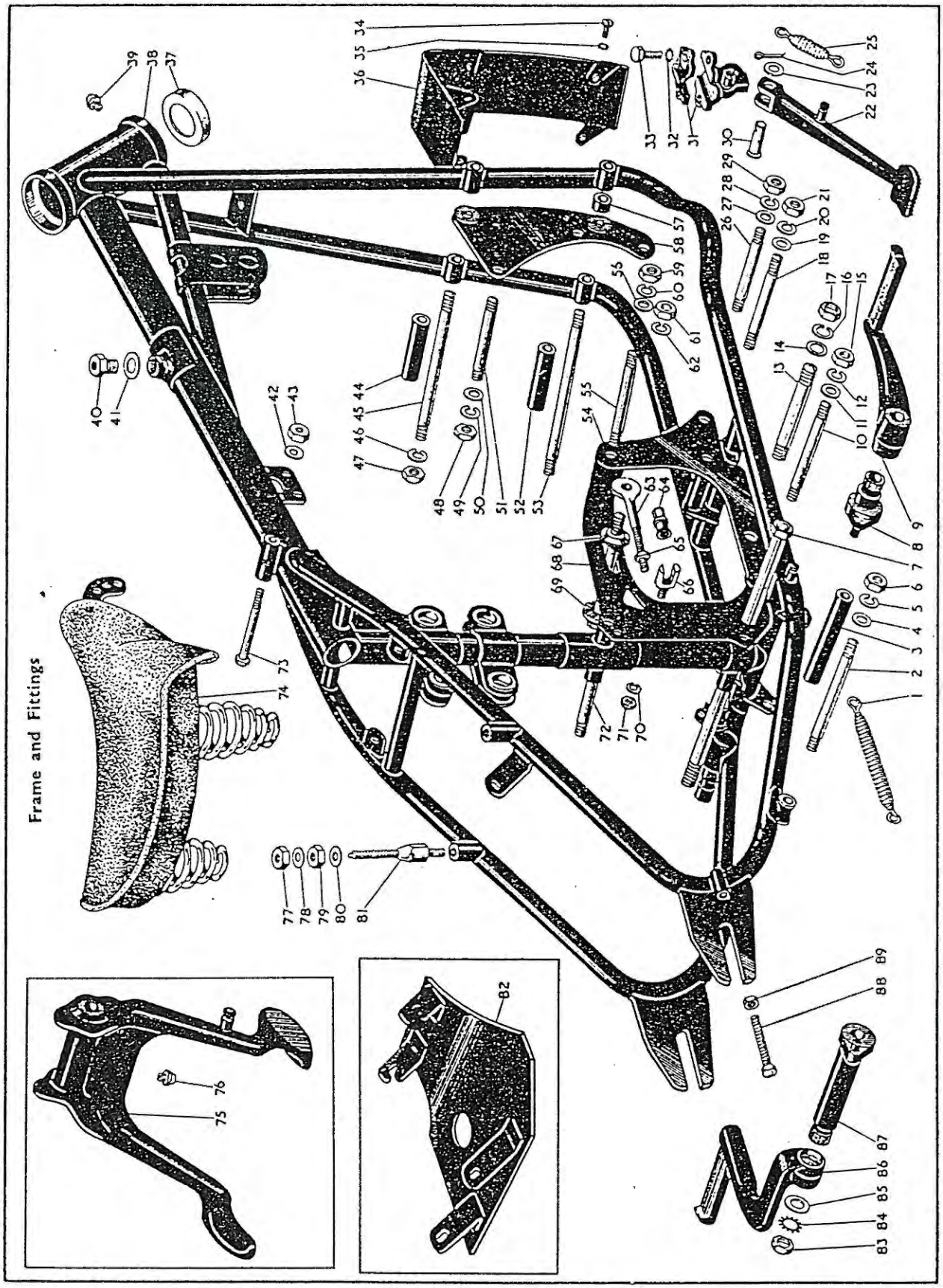

B32 B34 Rigid Frame (Competition)

Plate Ref. Number.	Models.	Part No.	Description.	Number per set.
13	B32 B34 (rigid)	42–4077	Gearbox pivot stud	1
14	B32 B34 (rigid)	2–1945	Gearbox pivot stud washer (plain)	2
15	B32 B34 (rigid)	2–46	Rear Engine and gearbox stud nut	4
16	B32 B34 (rigid)	2–1967	Gearbox pivot stud washer (spring)	2
17	B32 B34 (rigid)	2–1925	Gearbox pivot stud nut	2
18	B32 B34 (rigid)	27–5683	Rear engine and gearbox stud (bottom front)	1
19	B32 B34 (rigid)	2–1733	Rear engine and gearbox stud washer (plain)	2
20	B32 B34 (rigid)	2–522	Rear engine and gearbox stud washer (spring)	2
21	B32 B34 (rigid)	2–46	Rear engine and gearbox stud nut	2
—	B32 B34 (rigid)	42–4780	Prop stand assembly	1
22	B32 B34 (rigid)	67–4903	Prop stand leg complete	1
23	B32 B34 (rigid)	2–1945	Prop stand pivot pin washer	1
24	B32 B34 (rigid)	35–710	Prop stand pivot pin split pin	1
25	B32 B34 (rigid)	65–4742	Prop stand spring	1
26	B32 B34 (rigid)	27–5683	Crankcase fixing stud (bottom rear)	1
27	B32 B34 (rigid)	2–1733	Crankcase fixing stud washer (plain)	2
28	B32 B34 (rigid)	2–522	Crankcase fixing stud washer (spring)	2
29	B32 B34 (rigid)	2–46	Crankcase fixing stud nut	2
30	B32 B34 (rigid)	67–4907	Prop stand pivot pin	1
31	B32 B34 (rigid)	42–4781	Prop stand lug complete	1
32	B32 B34 (rigid)	36–382	Prop stand lug clip bolt washer (shakeproof)	2
33	B32 B34 (rigid)	28–2338	Prop stand lug clip bolt	2
34	B32 B34 (rigid)	2–1309	Front engine plate cover screw	6
35	B32 B34 (rigid)	29–3319	Front engine plate cover screw washer (shakeproof)	6
36	B32 B34 (rigid)	42–4125	Front engine plate cover	1
37	B32 B34 (rigid)	66–4149	Ball head cup	2
38	B32 B34 (rigid)	42–4160	Frame complete with fixed fittings	1
39	B32 B34 (rigid)	28–2080	Ball head grease nipple	1
40	B32 B34 (rigid)	42–4078	Petrol tank fixing bolt socket	1
41	B32 B34 (rigid)	29–8740	Petrol tank fixing bolt socket tab washer	1
42	B32 B34 (rigid)	2–923	Saddle front fixing bolt washer (plain)	1
43	B32 B34 (rigid)	2–49	Saddle front fixing bolt nut	1
44	B32 B34 (rigid)	42–4070	Front engine plate distance tube	1
45	B32 B34 (rigid)	27–5690	Front engine plate stud (top)	1
46	B32 B34 (rigid)	2–522	Front engine plate stud washer (spring)	4
47	B32 B34 (rigid)	2–46	Front engine plate stud nut	4
48	B32 B34 (rigid)	2–46	Crankcase fixing stud nut	6
49	B32 B34 (rigid)	2–522	Crankcase fixing stud washer (spring)	6
50	B32 B34 (rigid)	2–1733	Crankcase fixing stud washer (plain)	6
51	B32 B34 (rigid)	27–5683	Crankcase fixing stud	3
52	B32 B34 (rigid)	42–4070	Front engine plate distance tube	1
53	B32 B34 (rigid)	42–4099	Front engine plate stud (bottom)	1
54	B32 B34 (rigid)	42–4124	Rear engine and gearbox plate (bottom)	2
55	B32 B34 (rigid)	65–4182	Crankcase fixing stud (top rear)	1
56	B32 B34 (rigid)	2–1733	Crankcase fixing stud washer (plain)	2
57	B32 B34 (rigid)	42–4071	Front engine plate distance collar	1
58	B32 B34 (rigid)	42–4068	Front engine plate complete (offside)	1
58	B32 B34 (rigid)	42–4066	Front engine plate complete (nearside)	1
59	B32 B34 (rigid)	2–46	Crankcase fixing stud nut	2
60	B32 B34 (rigid)	2–522	Crankcase fixing stud washer (spring)	2
61	B32 B34 (rigid)	2–1925	Gearbox locking stud nut	1
62	B32 B34 (rigid)	2–1967	Gearbox locking stud washer (spring)	1
63	B32 B34 (rigid)	42–4190	Gearbox adjusting screw	1
64	B32 B34 (rigid)	42–4191	Gearbox adjusting screw nut	1
65	B32 B34 (rigid)	2–1616	Gearbox adjusting screw nut locknut	1
66	B32 B34 (rigid)	27–5705	Gearbox adjusting screw stop	1
67	B32 B34 (rigid)	42–4075	Gearbox locking stud washer (serrated)	1
68	B32 B34 (rigid)	42–4189	Rear engine and gearbox plate (top)	2
69	B32 B34 (rigid)	42–4074	Gearbox locking stud complete	1
70	B32 B34 (rigid)	2–1462	Gearbox adjusting screw stop washer (spring)	1
71	B32 B34 (rigid)	2–2395	Gearbox adjusting screw stop nut	1
72	B32 B34 (rigid)	65–4182	Rear engine and gearbox stud (top rear)	1
73	B32 B34 (rigid)	42–4199	Saddle front fixing bolt	1
74	B32 B34 (rigid)	42–9035	Saddle	1
75	B32 B34 (rigid)	42–4719	Central stand complete	1
76	B32 B34 (rigid)	28–2080	Central stand grease nipple	1
77	B32 B34 (rigid)	2–49	Saddle spring stud nut	2
78	B32 B34 (rigid)	2–923	Saddle spring stud washer (plain)	2
79	B32 B34 (rigid)	2–49	Saddle spring stud nut	2

Plate 11—*continued* FRAME and FITTINGS

B32 B34 Rigid Frame (Competition)

Plate Ref. Number.	Models.	Part No.	Description.	Number per set.
80	B32 B34 (rigid)	2–923	Saddle spring stud washer (plain)	2
81	B32 B34 (rigid)	65–9217	Saddle spring stud (rear)	2
82	B32 B34 (rigid)	42–2001	Crankcase shield complete	1
83	B32 B34 (rigid)	15–5753	Footrest stud securing nut	1
84	B32 B34 (rigid)	65–695	Footrest stud washer (shakeproof)	1
85	B32 B34 (rigid)	24–5914	Footrest stud washer (plain)	1
86	B32 B34 (rigid)	42–4S19	Footrest bracket (nearside)	1
87	B32 B34 (rigid)	65–4S11	Footrest distance tube complete (nearside)	1
88	B32 B34 (rigid)	67–4S00	Rear wheel adjusting screw	2
89	B32 B34 (rigid)	2–51	Rear wheel adjusting screw nut	2

Plate 12 FRAME and FITTINGS

B Group Swinging Arm Frame

Plate Ref. Number.	Models.	Part No.	Description.	Number per set.
1	B Group (swinging arm)	65–41S2	Rear engine and gearbox plate stud (top and bottom rear)	2
2	B Group (swinging arm)	2–522	Rear engine and gearbox plate stud washer (spring) (top and bottom rear) (1954/5)	4
2	B Group (swinging arm)	2–522	Rear engine and gearbox plate stud washer (spring) (1956)	5
3	B Group (swinging arm)	2–46	Rear engine and gearbox plate stud nut (top and bottom rear) (1954/5)	4
3	B Group (swinging arm)	2–46	Rear engine and gearbox plate stud nut (1956)	5
4	B Group (swinging arm)	2–1945	Gearbox pivot stud washer (plain)	2
5	B Group (swinging arm)	2–1967	Gearbox pivot stud washer (spring)	2
6	B Group (swinging arm)	2–1925	Gearbox pivot stud nut	2
7	B Group (swinging arm)	42–4077	Gearbox pivot stud	1
8	B Group (swinging arm)	27–56S3	Rear engine and gearbox plate stud (bottom front)	1
9	B Group (swinging arm)	2–522	Rear engine and gearbox plate stud washer (spring) (bottom front) (1954/5)	2
10	B Group (swinging arm)	2–46	Rear engine and gearbox plate stud nut (bottom front) (1954/5)	2
11	B Group (swinging arm)	2–522	Crankcase and rear engine plate fixing stud washer (spring) (bottom)	2
12	B Group (swinging arm)	2–46	Crankcase and rear engine plate fixing stud nut (bottom)	2
13	B Group (swinging arm)	27–56S3	Crankcase and rear engine plate stud (bottom)	1
14	B Group (swinging arm)	42–4125	Front engine plate cover	1
15	B Group (swinging arm)	29–3319	Front engine plate cover screw washer (shakeproof)	6
16	B Group (swinging arm)	2–1309	Front engine plate cover screw	6
17	B Group (swinging arm)	66–4149	Ball head cup	2
18	B Group (swinging arm)	42–4306	Frame complete with centre stand (1954/5)	1
18	B31 B33 (swinging arm)	42–4366	Frame complete with central stand (1956)	1
18	B32 B34 (swinging arm)	42–4393	Frame complete with central stand (1956)	1
—	B Group (swinging arm)	42–4132	Rear engine and gearbox plate bolt (top) (1956)	1
—	B32 B34 (swinging arm)	2–S61	Saddle front fixing bolt washer (1956)	2
19	B Group (swinging arm)	28–20S0	Ball head grease nipple	1
20	B Group (swinging arm)	42–4078	Petrol tank fixing bolt socket	1
21	B Group (swinging arm)	29–S740	Petrol tank fixing bolt socket tab washer	1
22	B Group (swinging arm)	66–4707	Saddle front fixing bolt washer (shakeproof)	1
23	B Group (swinging arm)	2–46	Saddle front fixing bolt nut	1
24	B31 B33 (swinging arm)	29–3319	Air cleaning fixing screw washer (shakeproof)	2
—	B31 B33 (swinging arm)	42–4591	Air cleaner element	1
—	B31 B33 (swinging arm)	42–4592	Air cleaner element cover	1
—	B31 B33 (swinging arm)	42–4593	Air cleaner element sealing ring	1
—	B31 B33 (swinging arm)	42–4594	Air cleaner element retaining clip	1
—	B31 B33 (swinging arm)	42–45S8	Air cleaner fixing screw distance collar	1

Plate 12

FRAME and FITTINGS

B Group Swinging Arm Frame

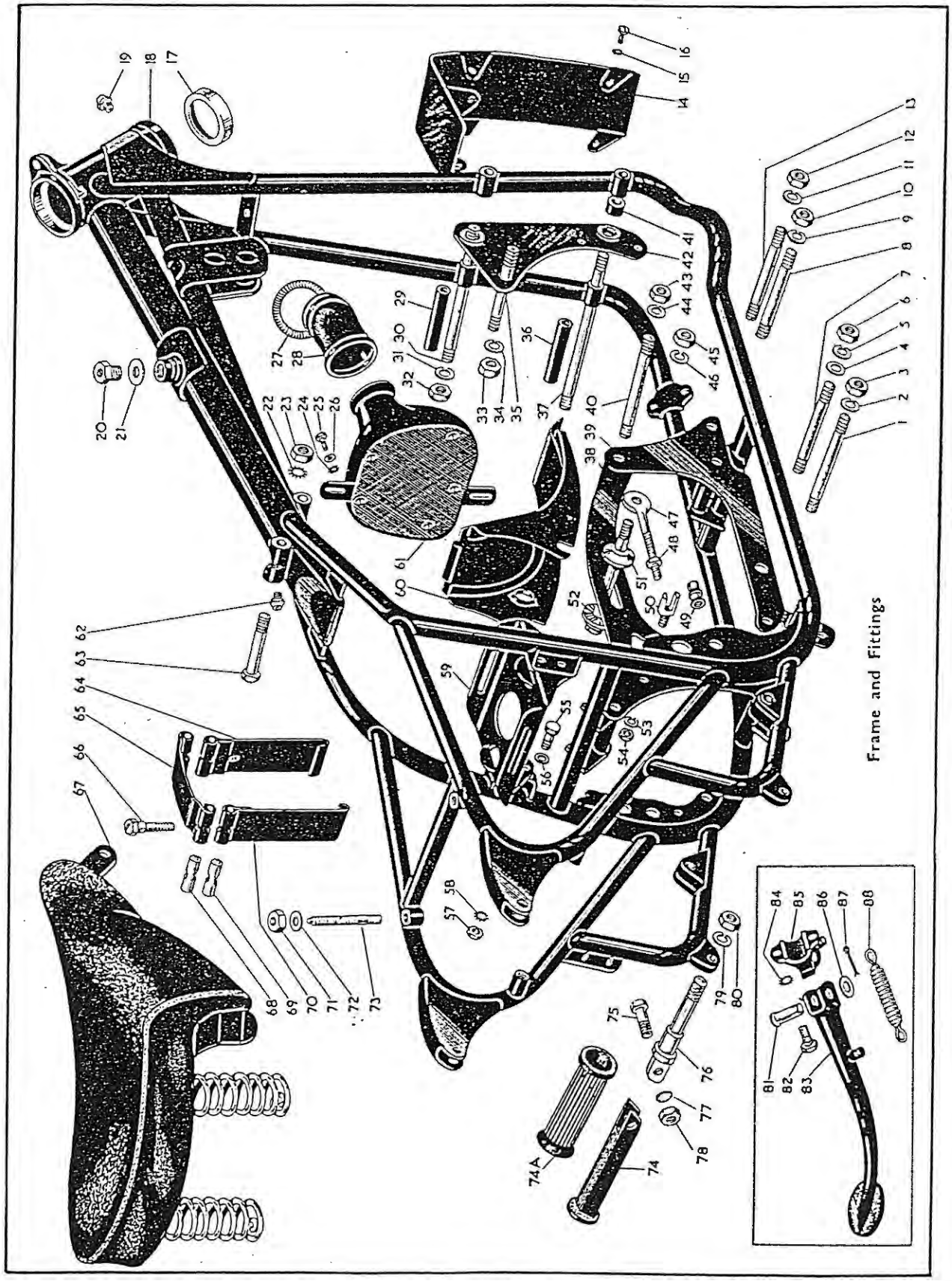

Front Fork and Fittings
Front Hub and Wheel Fittings
Rear Hub and Wheel Fittings
Mudguards Chainguard Toolbox etc.
Mudguards Chainguard Oil Tank etc.
Mudguards Oil Tank and Rear Chainguard
Mudguards Chainguard Handrail etc.
Petrol Tank Handlebar Rear Brake
Handlebar Petrol Tank Dual Seat etc.
Handlebar Petrol Tank Front Mudguard
Safety Bars Carrier Handrail
Legshields
Tools and Sundries
Electrical Equipment
Carrier and Panniers
Numerical

B Group Swinging Arm Frame

Plate Ref. Number.	Models.	Part No.	Description.	Number per set.
25	B31 B33 (swinging arm)	42–4574	Air cleaner fixing screw	2
26	B31 B33 (swinging arm)	2–1096	Air cleaner fixing screw washer (plain)	2
27	B31 B33 (swinging arm)	42–4587	Air cleaner rubber connection spring clip	1
27	B31 B33 (swinging arm)	67–4588	Air cleaner rubber connection spring clip (1956)	1
28	B31 (swinging arm)	42–4567	Air cleaner rubber connection (1954/5)	1
28	B33 (swinging arm)	42–4568	Air cleaner rubber connection (1954/5)	1
28	B31 B33 (swinging arm)	42–4568	Air cleaner rubber connection (1956)	1
28	B31 (swinging arm)	42–4568	Air cleaner rubber connection	1
29	B Group (swinging arm)	42–4070	Front engine plate and frame distance tube	1
30	B Group (swinging arm)	27–5690	Front engine plate frame stud (top)	1
31	B Group (swinging arm)	2–522	Front engine plate frame stud washer (spring)	4
32	B Group (swinging arm)	2–46	Front engine plate frame stud nut	4
33	B Group (swinging arm)	2–46	Crankcase front fixing stud nut	6
34	B Group (swinging arm)	2–522	Crankcase front fixing stud washer (spring)	6
35	B Group (swinging arm)	27–5684	Crankcase and front engine plate front fixing stud (1954/5)	3
35	B32 B34 (swinging arm)	27–5683	Crankcase and front engine plate fixing stud (1956)	3
36	B Group (swinging arm)	42–4070	Front engine plate and frame distance tube	1
37	B Group (swinging arm)	42–4099	Front engine plate stud (bottom) and horn fixing stud	1
38	B Group (swinging arm)	42–4072	Rear engine and gearbox plate (top)	2
39	B Group (swinging arm)	42–4073	Rear engine and gearbox plate (bottom)	2
40	B Group (swinging arm)	65–4182	Crankcase and rear engine plate top fixing stud (1954/5)	1
40	B32 B34 (swinging arm)	65–4182	Crankcase and rear engine plate top fixing stud (1956)	1
41	B Group (swinging arm)	42–4071	Front engine plate distance collar	2
42	B Group (swinging arm)	42–4068	Front engine plate (offside)	1
42	B Group (swinging arm)	42–4066	Front engine plate (nearside)	1
43	B Group (swinging arm)	2–46	Crankcase and rear engine plate top fixing stud nut	2
44	B Group (swinging arm)	2–522	Crankcase and rear engine plate top fixing stud washer (spring)	2
45	B Group (swinging arm)	2–1925	Gearbox locking stud nut	1
46	B Group (swinging arm)	2–1967	Gearbox locking stud washer (spring)	1
47	B Group (swinging arm)	42–4076	Gearbox adjusting screw	1
48	B Group (swinging arm)	2–1616	Gearbox adjusting screw locknut	1
49	B Group (swinging arm)	15–5664	Gearbox adjusting screw nut	1
50	B Group (swinging arm)	27–5705	Gearbox adjusting screw stop	1
51	B Group (swinging arm)	42–4075	Gearbox locking stud washer (serrated)	1
52	B Group (swinging arm)	42–4074	Gearbox locking stud complete	1
53	B Group (swinging arm)	2–1462	Gearbox adjusting screw stop washer (spring)	1
54	B Group (swinging arm)	2–2395	Gearbox adjusting screw stop nut	1
55	B Group (swinging arm)	24–6770	Battery base plate bolt (1954/5)	4
55	B31 B33 (swinging arm)	24–6770	Battery base plate bolt (1956)	4
56	B Group (swinging arm)	2–923	Battery base plate bolt washer (plain) (1954/5)	2
56	B31 B33 (swinging arm)	2–923	Battery base plate bolt washer (plain) (1956)	2
57	B Group (swinging arm)	15–6524	Battery base plate bolt nut (1954/5)	2
58	B Group (swinging arm)	36–382	Battery base plate bolt washer (shakeproof) (1954/5)	4
58	B31 B33 (swinging arm)	36–382	Battery base plate bolt washer (shakeproof) (1956)	4
59	B Group (swinging arm)	42–4515	Battery base plate (1954/5)	1
59	B31 B33 (swinging arm)	42–4515	Battery base plate (1956)	1
60	B Group (swinging arm)	42–4272	Rear engine plate cover complete (1954/5)	1
60	B31 B33 (swinging arm)	42–4272	Rear engine plate cover (1956)	1
61	B31 B33 (swinging arm)	42–4583	Air cleaner complete (1954/5)	1
62	B Group (swinging arm)	28–2080	Saddle front fixing bolt grease nipple	1
63	B Group (swinging arm)	67–4030	Saddle front fixing bolt (1954/5)	1
63	B31 B33 (swinging arm)	67–4030	Saddle front fixing bolt (1956)	1
63	B32 B34 (swinging arm)	65–4185	Saddle front fixing bolt (1956)	1
—	B Group (swinging arm)	42–4514	Battery carrier complete (1954/5)	1
—	B31 B33 (swinging arm)	42–4514	Battery carrier complete (1956)	1
64	B Group (swinging arm)	42–4516	Battery strap (side) complete (1954/5)	1
64	B31 B33 (swinging arm)	42–4516	Battery strap (side) complete (1956)	1
65	B Group (swinging arm)	42–4502	Battery strap (top) (1954/5)	1
65	B31 B33 (swinging arm)	42–4502	Battery strap (top) (1956)	1
66	B Group (swinging arm)	42–4504	Battery strap bolt (1954/5)	1
—	B31 B33 (swinging arm)	2–6537	Battery strap bolt washer (plain)	2
66	B31 B33 (swinging arm)	24–7343	Battery strap bolt (1956)	2
67	B Group (swinging arm)	42–9032	Saddle (as required) (1954/5)	1
67	B31 B33 (swinging arm)	42–9032	Saddle (as required) (1956)	1
67	B32 B34 (swinging arm)	42–9048	Saddle (as required) (1956)	1
68	B Group (swinging arm)	42–4505	Battery strap swivel pin (plain hole) (1954/5)	1
68	B31 B33 (swinging arm)	42–4505	Battery strap swivel pin (plain hole) (1956)	1
69	B Group (swinging arm)	42–4506	Battery strap swivel pin (tapped hole) (1954/5)	1
69	B31 B33 (swinging arm)	42–4506	Battery strap swivel pin (tapped hole) (1956)	1

Plate 12—*continued* FRAME and FITTINGS

B Group Swinging Arm Frame

Plate Ref. Number.	Models.	Part No.	Description.	Number per set.
70	B Group (swinging arm)	42–4503	Battery strap (side) (1954/5)	1
70	B31 B33 (swinging arm)	42–4503	Battery strap (side) (1956)	1
71	B Group (swinging arm)	2–49	Saddle rear fixing stud nut	4
72	B Group (swinging arm)	2–923	Saddle rear fixing stud	4
73	B Group (swinging arm)	67–4040	Saddle rear fixing stud (1954/5)	2
73	B31 B33 (swinging arm)	67–4040	Saddle rear fixing stud (1956)	2
73	B32 B34 (swinging arm)	15–1120	Saddle rear fixing stud (1956)	2
—	B Group (swinging arm)	42–4835	Pillion footrest complete assembly (1954/5)	2
—	B31 B33 (swinging arm)	42–4835	Pillion footrest complete assembly (1956)	2
74	B31 B33 (swinging arm)	29–7581	Pillion footrest only	2
74	B Group (swinging arm)	29–7561	Pillion footrest (1954)	2
74A	B31 B33 (swinging arm)	29–7583	Pillion footrest rubber	2
75	B Group (swinging arm)	29–7564	Pillion footrest swivel bolt (1954/5)	2
75	B31 B33 (swinging arm)	29–7564	Pillion footrest swivel bolt (1956)	2
76	B Group (swinging arm)	29–7560	Pillion footrest anchor bolt (1954/5)	2
76	B31 B33 (swinging arm)	29–7560	Pillion footrest anchor bolt (1956)	2
77	B Group (swinging arm)	36–382	Pillion footrest swivel bolt washer (1954/5)	2
77	B31 B33 (swinging arm)	36–382	Pillion footrest swivel bolt washer (1956)	2
78	B Group (swinging arm)	24–6040	Pillion footrest swivel bolt nut (1954/5)	2
78	B31 B33 (swinging arm)	24–6040	Pillion footrest swivel bolt nut (1956)	2
79	B Group (swinging arm)	2–522	Pillion footrest anchor bolt washer (1954/5)	2
79	B31 B33 (swinging arm)	2–522	Pillion footrest anchor bolt washer (1956)	2
80	B Group (swinging arm)	2–46	Pillion footrest anchor bolt nut (1954/5)	2
80	B31 B33 (swinging arm)	2–46	Pillion footrest anchor bolt nut (1956)	2
—	B Group (swinging arm)	42–4769	Prop stand assembly (1954/5)	1
—	B31 B33 (swinging arm)	42–4769	Prop stand assembly (1956)	1
—	B31 B33 (swinging arm)	42–4774	Prop stand assembly (Police type)	1
81	B Group (swinging arm)	67–4907	Prop stand pivot pin (1954/5)	1
81	B31 B33 (swinging arm)	67–4907	Prop stand pivot pin (1956)	1
82	B Group (swinging arm)	28–2338	Prop stand lug clip bolt (1954/5)	2
82	B31 B33 (swinging arm)	3–1156	Prop stand lug clip bolt (1956)	2
83	B Group (swinging arm)	42–4772	Prop stand leg (1954/5)	1
83	B31 B33 (swinging arm)	42–4772	Prop stand leg (1956)	1
83	B31 B33 (swinging arm)	67–4888	Prop stand leg (Police type)	1
84	B Group (swinging arm)	36–382	Prop stand lug clip bolt washer (1954/5)	2
84	B31 B33 (swinging arm)	36–382	Prop stand lug clip bolt washer (1956)	2
85	B Group (swinging arm)	42–4776	Prop stand lug body complete (1954/5)	1
85	B31 B33 (swinging arm)	42–4776	Prop stand lug body complete (1956)	1
86	B Group (swinging arm)	2–1945	Prop stand pivot pin washer (plain) (1954/5)	1
86	B31 B33 (swinging arm)	2–1945	Prop stand pivot pin washer (plain) (1956)	1
87	B Group (swinging arm)	35–710	Prop stand pivot pin split pin (1954/5)	1
87	B31 B33 (swinging arm)	35–710	Prop stand pivot pin split pin (1956)	1
88	B Group (swinging arm)	65–4742	Prop stand spring (1954/5)	1
88	B31 B33 (swinging arm)	65–4742	Prop stand spring (1956)	1

Plate 13 REAR SUSPENSION

B Group Swinging Arm Frame

Plate Ref. Number.	Models.	Part No.	Description.	Number per set.
1	B Group (swinging arm)	42–4719	Central stand complete	1
2	B Group (swinging arm)	28–2080	Central stand grease nipple	1
3	B Group (swinging arm)	42–4730	Central stand spring	1
4	B Group (swinging arm)	42–4713	Central stand distance tube	1
5	B Group (swinging arm)	42–4714	Central stand pivot stud	1
6	B Group (swinging arm)	2–1945	Central stand pivot stud washer (plain)	1
7	B Group (swinging arm)	2–1967	Central stand pivot stud washer (spring)	1

Plate 13

REAR SUSPENSION

B Group Swinging Arm Frame

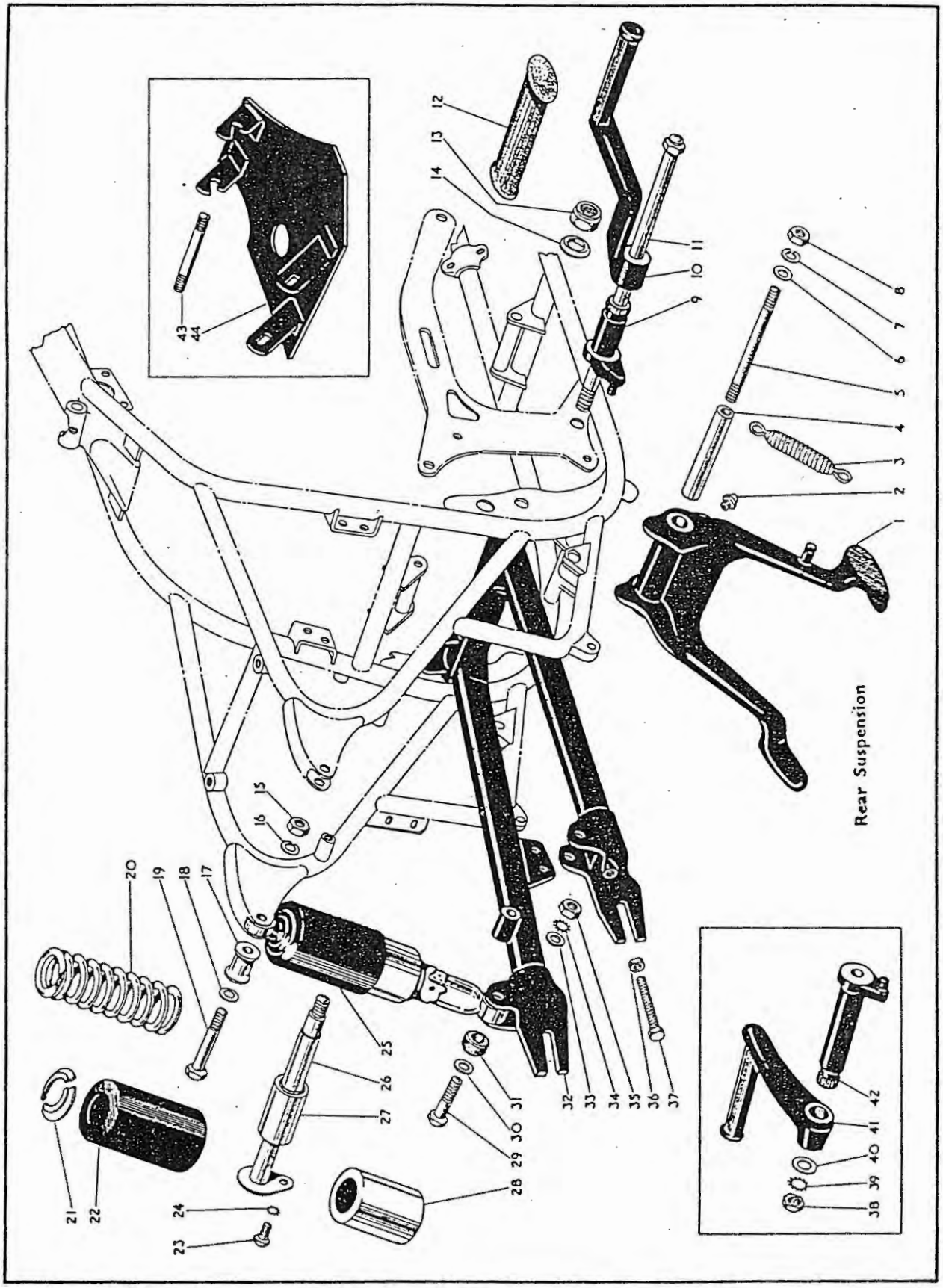

REAR SUSPENSION

B Group Swinging Arm Frame

Plate Ref. Number.	Models.	Part No.	Description.	Number per set.
8	B Group (swinging arm)	24–5860	Central stand pivot stud nut	2
9	B Group (swinging arm)	42–4806	Footrest distance tube complete (offside)	1
9	B31 B33 (swinging arm)	42–4806	Footrest distance tube (offside) (1956)	1
9	B32 B34 (swinging arm)	42–4823	Footrest distance tube (offside) (1956)	1
10	B Group (swinging arm)	42–4804	Footrest bracket (offside) (1954/5)	1
10	B31 B33 (swinging arm)	42–4804	Footrest bracket (offside) (1956)	1
10	B32 B34 (swinging arm)	42–4820	Footrest bracket (offside) (1956)	1
11	B Group (swinging arm)	42–4808	Footrest stud (1954/5)	1
11	B31 B33 (swinging arm)	42–4808	Footrest stud (1956)	1
11	B32 B34 (swinging arm)	42–4821	Footrest stud (1956)	1
12	B Group (swinging arm)	29–7551	Footrest rubber (1954/5)	2
12	B31 B33 (swinging arm)	29–7551	Footrest rubber (1956)	2
13	B Group (swinging arm)	42–4116	Swinging arm fork spindle locknut (1954/5)	1
13	B31 B33 (swinging arm)	42–4343	Swinging arm fork spindle locknut (1956)	1
13	B32 B34 (swinging arm)	42–4116	Swinging arm fork spindle locknut (1956)	1
14	B Group (swinging arm)	42–4117	Swinging arm fork spindle washer (1954/5)	1
14	B31 B33 (swinging arm)	42–4364	Swinging arm fork spindle washer (1956)	1
14	B32 B34 (swinging arm)	42–4117	Swinging arm fork spindle washer (1956)	1
15	B Group (swinging arm)	2–46	Rear mudguard bracket and damper fixing bolt nut (top)	2
16	B Group (swinging arm)	2–522	Rear mudguard bracket and damper fixing bolt washer (top)	2
17	B Group (swinging arm)	42–6763	Rear mudguard bracket and damper spacing collar	2
18	B Group (swinging arm)	2–1733	Rear mudguard bracket and damper fixing bolt washer (top)	2
19	B Group (swinging arm)	65–4185	Rear mudguard bracket and damper fixing bolt (top)	2
20	B Group (swinging arm)	42–4294	Rear suspension damper spring (1954/5)	2
21	B Group (swinging arm)	42–4289	Rear suspension spring retainer (2 halves) (1954/5)	2
22	B Group (swinging arm)	42–4291	Rear suspension outer shroud (1954/5)	2
23	B Group (swinging arm)	66–2010	Swinging arm fork spindle securing bolt	1
24	B Group (swinging arm)	36–382	Swinging arm fork spindle securing bolt washer	1
25	B Group (swinging arm)	42–4297	Rear suspension damper complete (110 lbs. rate) (1954/5)	2
25	B31 B33 (swinging arm)	42–4297	Rear suspension damper complete (110 lbs. rate) (1956)	2
25	B Group (swinging arm)	42–4286	Rear suspension damper complete (90 lbs. rate) (1954/5)	2
25	B32 B34 (swinging arm)	42–4286	Rear suspension damper complete (90 lbs. rate) (1956)	2
25	B Group (swinging arm)	42–4300	Rear suspension damper complete (130 lbs. rate) (1954/5)	2
25	B31 B33 (swinging arm)	42–4300	Rear suspension damper complete (130 lbs. rate) (1956)	2
26	B Group (swinging arm)	42–4112	Swinging arm fork spindle (1945/5)	1
26	B31 B33 (swinging arm)	42–4340	Swinging arm fork spindle (1956)	1
26	B32 B34 (swinging arm)	42–4112	Swinging arm fork spindle (1956)	1
27	B Group (swinging arm)	42–4115	Swinging arm housing silent bloc (1954/5)	2
27	B31 B33 (swinging arm)	42–4362	Swinging arm housing silent bloc (1956)	2
27	B32 B34 (swinging arm)	42–4115	Swinging arm housing silent bloc (1956)	2
28	B Group (swinging arm)	42–4292	Rear suspension inner shroud (1954/5)	2
29	B Group (swinging arm)	3–1399	Rear suspension damper bottom fixing bolt	2
30	B Group (swinging arm)	2–1733	Rear suspension damper bottom fixing bolt washer	2
31	B Group (swinging arm)	42–4155	Rear suspension mounting bush (rubber) (1954/5)	4
32	B Group (swinging arm)	42–4102	Swinging arm complete (1954/5)	1
32	B31 B33 (swinging arm)	42–4316	Swinging arm complete (1956)	1
32	B32 B34 (swinging arm)	42–4317	Swinging arm complete (1956)	1
33	B Group (swinging arm)	67–4129	Rear suspension damper bottom bolt washer	2
34	B Group (swinging arm)	66–4707	Rear suspension damper bottom bolt washer (shakeproof)	2
35	B Group (swinging arm)	2–46	Rear suspension damper bottom bolt nut	2
36	B Group (swinging arm)	2–51	Rear wheel adjusting screw lock nut (1954/5)	2
36	B Group (swinging arm)	24–563	Rear wheel adjusting screw lock nut (1956)	2
37	B Group (swinging arm)	67–4800	Rear wheel adjusting screw (1954/5)	2
37	B31 B33 (swinging arm)	67–4800	Rear wheel adjusting screw (1956)	2
37	B32 B34 (swinging arm)	42–6040	Rear wheel adjusting screw (1956)	2
38	B Group (swinging arm)	15–5753	Footrest stud securing nut (1954/5)	1
38	B31 B33 (swinging arm)	42–4841	Footrest stud securing nut (1956)	1
38	B32 B34 (swinging arm)	15–5753	Footrest stud securing nut (1956)	1
39	B Group (swinging arm)	65–695	Footrest stud washer (shakeproof) (1954/5)	1
39	B31 B33 (swinging arm)	42–4842	Footrest stud washer (shakeproof) (1956)	1
39	B32 B34 (swinging arm)	65–695	Footrest stud washer (shakeproof) (1956)	1
40	B Group (swinging arm)	24–5914	Footrest stud washer (plain) (1954/5)	1
40	B31 B33 (swinging arm)	66–5524	Footrest stud washer (plain) (1956)	1
40	B32 B34 (swinging arm)	24–5914	Footrest stud washer (plain) (1956)	1
41	B Group (swinging arm)	42–4805	Footrest bracket (nearside) (1954/5)	1
41	B31 B33 (swinging arm)	42–4840	Footrest bracket (nearside) (1956)	1
41	B32 B34 (swinging arm)	42–4819	Footrest bracket (nearside) (1956)	1
42	B Group (swinging arm)	65–4811	Footrest distance tube (nearside)	1
44	B32 B34 (swinging arm)	42–2001	Crankcase shield	1

Plate 14

FRONT FORK and FITTINGS

B31 B33 Rigid and Spring Frame

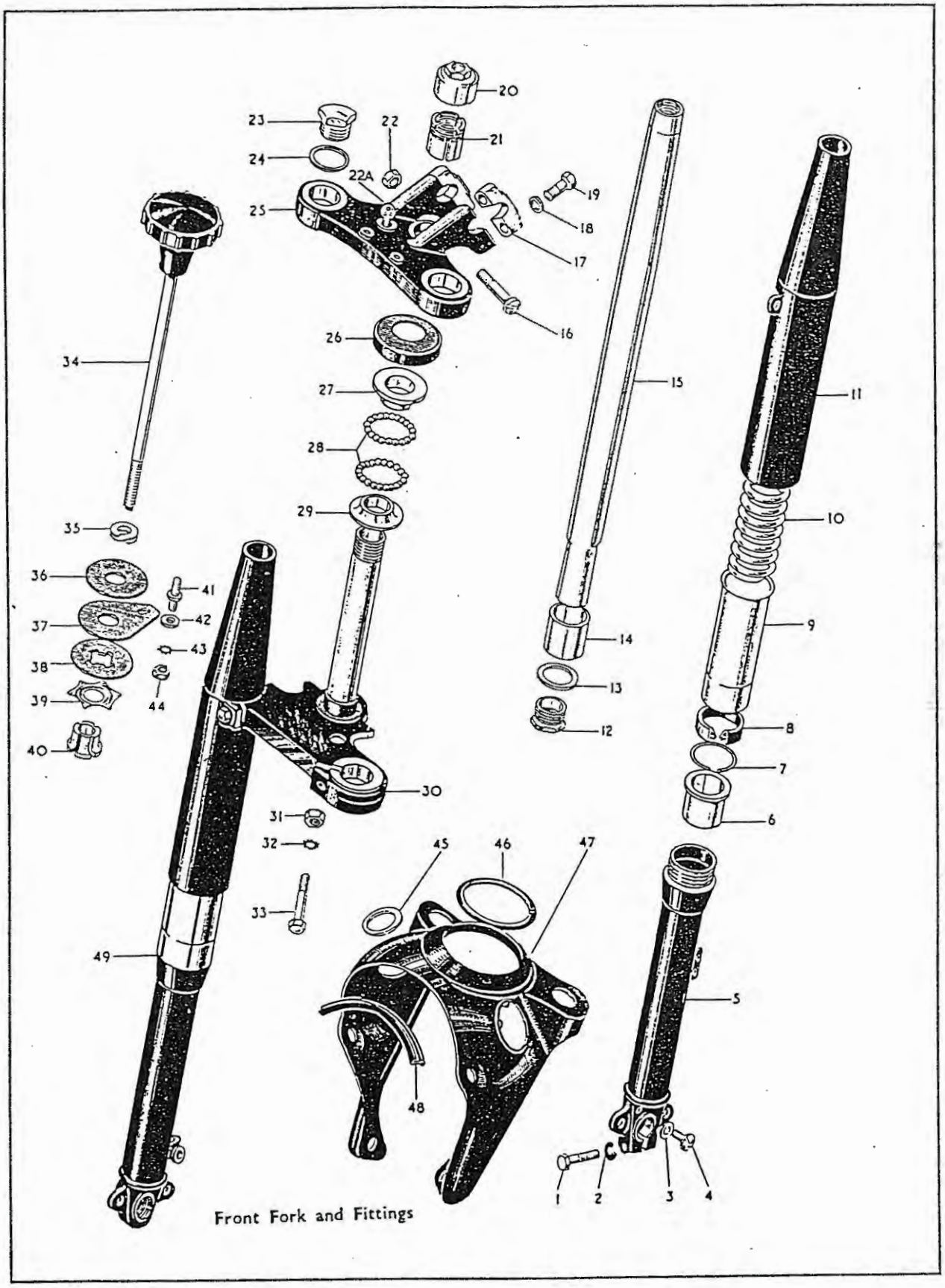

Front Fork and Fittings

FRONT FORK and FITTINGS

B31 B33 Rigid and Spring Frame

Plate Ref. Number.	Models.	Part No.	Description.	Number per set.
—	B31	65-5443	Front forks complete assembly (1955)	1
—	B33	65-5444	Front forks complete assembly (1955)	1
—	B33	65-5433	Front forks complete assembly (1954)	1
1	B31 B33	65-5295	Fork end bolt (nearside)	1
2	B31 B33	2-2903	Fork end bolt spring washer	1
3	B31 B33	2-292	Fork end drain plug washer	2
4	B31 B33	2-1309	Fork end drain plug	2
5	B31	65-5408	Front fork sliding tube (nearside)	1
5	B33	67-5057	Front fork sliding tube (nearside)	1
6	B31 B33	29-5346	Front fork top bearing	2
7	B31 B33	29-5320	Front fork top bearing circlip	2
8	B31 B33	29-5313	Front fork oil seal	2
9	B31 B33	29-5310	Front fork oil seal holder	2
10	B31 B33	65-5390	Front fork spring	2
11	B31 B33	67-5009	Fork outer sleeve	2
12	B31 B33	29-5283	Front fork shaft plug	2
13	B31 B33	29-5338	Front fork shaft plug washer	2
14	B31 B33	29-5347	Front fork bottom bearing	2
15	B31 B33	67-5014	Front fork shaft	2
16	B31 B33	27-5135	Front fork top yoke clip bolt	1
17	B31 B33	65-5333	Handlebar clip	2
18	B31 B33	15-5155	Handlebar and yoke clip bolt washer	4
19	B31 B33	65-5334	Handlebar and yoke clip bolt	4
20	B31 B33	67-5024	Steering stem adjusting sleeve cap	1
21	B31 B33	67-5023	Steering stem adjusting sleeve	1
22	B31 B33	2-49	Steering damper anchor plate nut	1
22A	B31 B33	65-5445	Steering head lock	1
23	B31 B33	65-5331	Front fork tube nut	2
24	B31 B33	65-5332	Front fork tube nut washer	2
25	B31 B33	65-5448	Front fork top yoke (1955)	1
25	B31 B33	65-5431	Front fork top yoke	1
26	B31 B33	66-5204	Steering head dust cap	1
27	B31 B33	65-5126	Steering head ball race cone (tap)	1
28	B31 B33	1-4675	Steering head balls	40
29	B31 B33	65-5127	Steering head ball race cone (bottom)	1
30	B31 B33	42-5012	Front fork bottom yoke	1
31	B31 B33	24-5160	Bottom yoke bolt nut	2
32	B31 B33	36-382	Bottom yoke bolt washer (shakeproof)	2
33	B33	29-5289	Bottom yoke bolt	2
33	B31	65-5435	Bottom yoke bolt	2
34	B31 B33	67-5021	Steering damper adjusting rod	1
35	B31 B33	24-6035	Steering damper knob spring washer	1
36	B31 B33	65-5380	Steering damper friction washer	1
37	B31 B33	27-5152	Steering damper anchor plate	1
38	B31 B33	25-5241	Steering damper bottom plate	1
39	B31 B33	25-5247	Steering damper star washer	1
40	B31 B33	65-5328	Steering damper centre	1
41	B31 B33	65-5327	Steering damper anchor plate stud	1
42	B31 B33	2-923	Steering damper anchor plate bolt washer	1
43	B31 B33	36-382	Steering damper anchor plate bolt washer (shakeproof)	1
44	B31 B33	2-49	Steering damper anchor plate bolt nut	1
45	B31 B33	67-5080	Headlamp cowl fixing support washer	2
46	B31 B33	67-5088	Speedo mounting rubber	1
47	B31 B33	67-5084	Headlamp cowl complete	1
48	B31 B33	67-5087	Rubber extrusion	1
49	B31	65-5410	Front fork sliding tube complete (o/s)	1
49	B33	65-5420	Front fork sliding tube complete (o/s)	1

Plate 15

FRONT FORK (less Lighting Set)

B32 B34 Rigid Frame (Competition) 7" Brake
B32 B34 Swinging Arm (Competition) 7" Brake (1956)

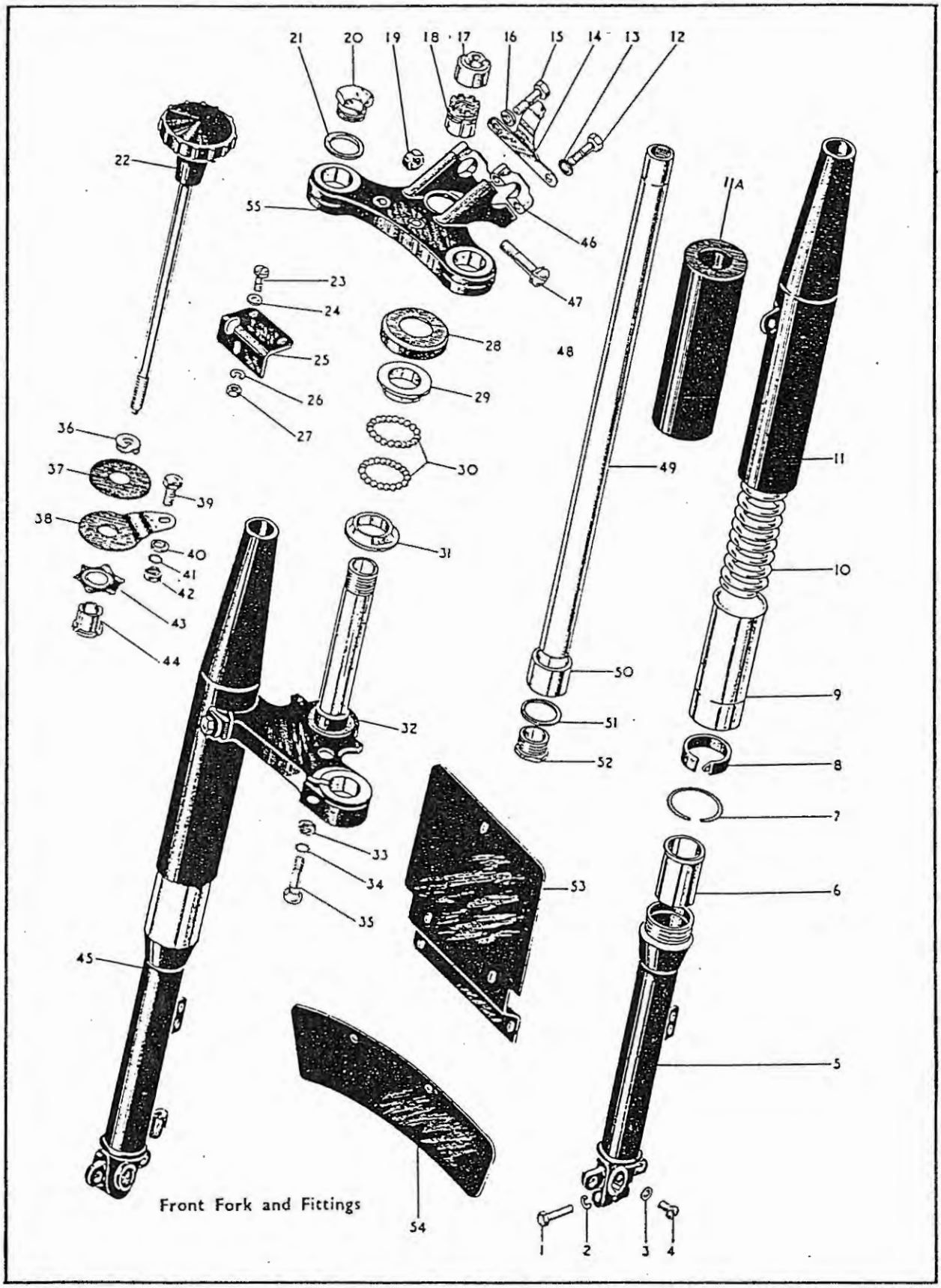

Front Fork and Fittings

FRONT FORK (less Lighting Set)

B32 B34 Rigid Frame (Competition) 7″ Brake
B32 B34 Swinging Arm (Competition) 7″ Brake (1956)

Plate Ref. Number.	Models.	Part No.	Description.	Number per set.
—	B32	42–5006	Front fork complete (1954/5)	1
—	B32 B34 (swinging arm)	42–5008	Front fork complete (1956)	1
1	B34	65–5295	Fork end bolt (nearside)	1
2	B32 B34	2–2903	Fork end bolt spring washer	1
3	B32 B34	2–292	Fork end drain plug washer	2
4	B32 B34	2–1309	Fork end drain plug	2
5	B32 B34	65–5408	Front fork sliding tube (nearside) complete	1
6	B32 B34	65–5424	Front fork top bearing	2
7	B32 B34	29–5320	Front fork top bearing circlip	2
8	B32 B34	29–5313	Front fork oil seal	2
9	B32 B34	29–5310	Front fork oil seal holder complete	2
10	B32 B34	65–5390	Front fork springs	2
11	B32 B34	67–5009	Fork outer sleeve (1954/5)	2
11A	B32 B34 (swinging arm)	42–5024	Front fork spring cover (1956)	2
12	B32 B34	65–5334	Handlebar and yoke clip bolt	2
13	B32 B34	15–5155	Handlebar and yoke clip bolt washer	4
14	B32 B34	65–5426	Steering damper knob securing plate	1
15	B32 B34	2–6026	Handlebar clip and damper knob securing plate bolt	2
16	B32 B34	2–370	Handlebar clip and damper knob securing plate distance piece	2
17	B32 B34	67–5024	Steering stem adjusting sleeve cap	1
18	B32 B34	67–5023	Steering stem adjusting sleeve	1
19	B32 B34	2–46	Front fork top yoke clip bolt nut	1
20	B32 B34	65–5331	Front fork tube nut	2
21	B32 B34	65–5332	Front fork tube nut washer	2
22	B32 B34	67–5021	Steering damper adjusting rod complete	1
23	B32 B34	15–7161	Combined number plate screw	3
24	B32 B34	27–8560	Combined number plate screw washer	6
25	B32 B34	65–6617	Front number plate bracket	1
26	B32 B34	2–1462	Combined number plate screw spring washer	3
27	B32 B34	2–2395	Combined number plate screw nut	3
28	B32 B34	66–5204	Steering head dust cap	1
29	B32 B34	65–5126	Steering head ball race cone (top)	1
30	B32 B34	1–4675	Steering head balls	40
31	B32 B34	65–5127	Steering head ball race cone (bottom)	1
32	B32 B34	42–5012	Front fork bottom yoke complete	1
33	B32 B34	24–5160	Bottom yoke bolt nut	2
34	B32 B34	36–382	Bottom yoke bolt washer (shakeproof)	2
35	B32 B34	29–5289	Bottom yoke bolt	2
36	B32 B34	24–6035	Steering damper knob spring washer	1
37	B32 B34	65–5380	Steering damper friction washer	1
38	B32 B34	42–5014	Steering damper anchor plate	1
39	B32 B34	28–2338	Steering damper anchor plate bolt	1
40	B32 B34	2–923	Steering damper anchor plate bolt washer	1
41	B32 B34	36–382	Steering damper anchor plate bolt washer (shakeproof)	1
42	B32 B34	2–49	Steering damper anchor plate bolt nut	1
43	B32 B34	25–5247	Steering damper star washer	1
44	B32 B34	65–5328	Steering damper centre	1
45	B32 B34	65–5410	Front fork sliding tube (offside) complete	1
46	B32 B34	65–5333	Handlebar clip	2
47	B32 B34	27–5135	Front fork top yoke clip bolt	1
48	B32 B34	89–5061	Front fork shaft (1954/5)	2
49	B32 B34 (swinging arm)	42–5027	Front fork shaft (1956)	2
50	B32 B34	29–5347	Front fork bottom bearing	2
51	B32 B34	29–5338	Front fork shaft plug washer	2
52	B32 B34	29–5283	Front fork shaft plug	2
53	B32 B34	65–6616	Competition number plate (front)	1
54	B32 B34	65–6615	Registration number plate (front)	1
55	B32 B34	42–5036	Front fork top yoke	1

FRONT FORK and FITTINGS

B31 B32 B34 (7″ Brake) B33 (8″ Brake) Swinging Arm Frame (1954/5)
B31 B33 Swinging Arm Frame (7″ Brake) (1956)

Plate Ref. Number.	Models.	Part No.	Description.	Number per set.
—	B31 B33	42–5046	Front fork complete (assembled) (7″ brake) (1956)	1
—	B31 B32 B34	42–5034	Front fork complete (assembled) (7″ brake) (1955)	1
—	B33	42–5033	Front fork complete (assembled) (8″ brake) (1955)	1
—	B33	42–5005	Front fork complete (assembled) (8″ brake) (1954)	1
1	B Group	67–50S7	Headlamp cowl rubber extrusion (1954/5)	1
1	B31 B33	67–50S7	Headlamp cowl rubber extrusion (1956)	1
2	B Group	67–50S0	Headlamp cowl fixing support washer (1954/5)	2
2	B31 B33	67–50S0	Headlamp cowl fixing support washer (1956)	2
3	B Group	67–50S8	Speedometer mounting rubber (1954/5)	1
3	B31 B33	67–50S8	Speedometer mounting rubber (1956)	1
4	B Group	67–5090	Headlamp cowl speedometer blanking washer (1954/5)	1
4	B31 B33	67–5090	Headlamp cowl speedometer blanking washer (1956)	1
4A	B Group	67–50S4	Headlamp cowl complete (1954/5)	1
4A	B31 B33	67–50S4	Headlamp cowl complete (1956)	1
5	B Group	42–5035	Front fork top yoke (1955)	1
5	B31 B33	42–5035	Front fork top yoke (1956)	1
5	B31 B33	42–5010	Front fork top yoke (1954)	1
6	B Group	65–5331	Front fork tube nut (1954/5)	2
6	B31 B33	65–5331	Front fork tube nut (1956)	2
7	B Group	65–5332	Front fork tube nut washer (1954/5)	2
7	B31 B33	65–5332	Front fork tube nut washer (1956)	2
8	B Group	29–5315	Front fork top yoke clip bolt nut	1
8	B31 B33	29–5315	Front fork top yoke clip bolt nut	1
8A	B Group	65–5445	Steering head lock (1954/5)	1
8A	B31 B33	65–5445	Steering head lock (1956)	1
9	B Group	67–5024	Steering stem adjusting sleeve cap (1954/5)	1
9	B31 B33	42–5021	Steering stem adjusting sleeve cap (1956)	1
10	B Group	67–5023	Steering stem adjusting sleeve (1954/5)	1
10	B31 B33	67–5023	Steering stem adjusting sleeve (1956)	1
11	B Group	65–5334	Handlebar and yoke clip bolt (1954/5)	4
11	B31 B33	65–5334	Handlebar and clip bolt (1956)	4
12	B Group	15–5155	Handlebar and yoke clip bolt washer (1954/5)	4
12	B31 B33	15–5155	Handlebar and yoke clip bolt washer (1956)	4
13	B Group	65–5333	Handlebar clip (1954/5)	2
13	B31 B33	65–5333	Handlebar clip (1956)	2
14	B Group	27–5135	Front fork top yoke clip bolt (1954/5)	1
14	B31 B33	27–5135	Front fork top yoke clip bolt (1956)	1
15	B Group	66–5204	Steering head dust cap (1954/5)	1
15	B31 B33	66–5204	Steering head dust cap (1956)	1
16	B Group	65–5126	Steering head ball race cone (top) (1954/5)	1
16	B31 B33	65–5126	Steering head ball race cone (top) (1956)	1
17	B Group	1–4675	Steering head balls (1954/5)	40
17	B31 B33	1–4675	Steering head balls (1956)	40
18	B Group	65–5127	Steering head ball race cone (bottom) (1954/5)	1
18	B31 B33	65–5127	Steering head ball race cone (bottom) (1956)	1
19	B Group	42–5012	Front fork bottom yoke complete (1954/5)	1
19	B31 B33	42–5012	Front fork bottom yoke complete (1956)	1
20	B Group	67–5021	Steering damper adjusting rod complete (1954/5)	1
21	B Group	24–6035	Steering damper knob washer (spring) (1954/5)	1
22	B Group	65–53S0	Steering damper friction washer (1954/5)	1
23	B Group	42–5014	Steering damper anchor plate (1954/5)	1
24	B Group	25–5247	Steering damper star washer (1954/5)	1
25	B Group	65–532S	Steering damper centre (1954/5)	1
26	B Group	2S–2338	Steering damper anchor plate bolt (1954/5)	1
27	B Group	2–923	Steering damper anchor plate bolt washer (plain) (1954/5)	1
28	B Group	36–3S2	Steering damper anchor plate bolt lock washer (1954/5)	1
29	B Group	2–49	Steering damper anchor plate bolt nut (1954/5)	1
30	B Group	24–5160	Bottom yoke bolt nut (1954/5)	2
30	B31 B33	24–5160	Bottom yoke bolt nut (1956)	2
31	B Group	36–3S2	Bottom yoke bolt washer (shakeproof) (1954/5)	2
31	B31 B33	36–3S2	Bottom yoke bolt washer (shakeproof) (1956)	2
32	B Group	65–5435	Bottom yoke bolt (1954/5)	2
32	B31 B33	65–5435	Bottom yoke bolt (1956)	2
33	B31 B33	2–923	Steering damper anchor plate bolt washer (plain) (1956)	1
34	B31 B33	36–3S2	Bottom yoke bolt washer (shakeproof) (1956)	1
35	B31 B33	2–49	Steering damper anchor plate bolt nut (1956)	1
36	B31 B33	2–49	Steering stop plate locating plug nut (1956)	1
37	B31 B33	36–3S2	Steering stop plate locating plug washer (shakeproof) (1956)	1

Plate 16

FRONT FORK and FITTINGS

B31 B32 B34 (7" Brake) B33 (8" Brake) Swinging Arm Frame (1954/5)
B31 B33 Swinging Arm Frame (7" Brake) (1956)

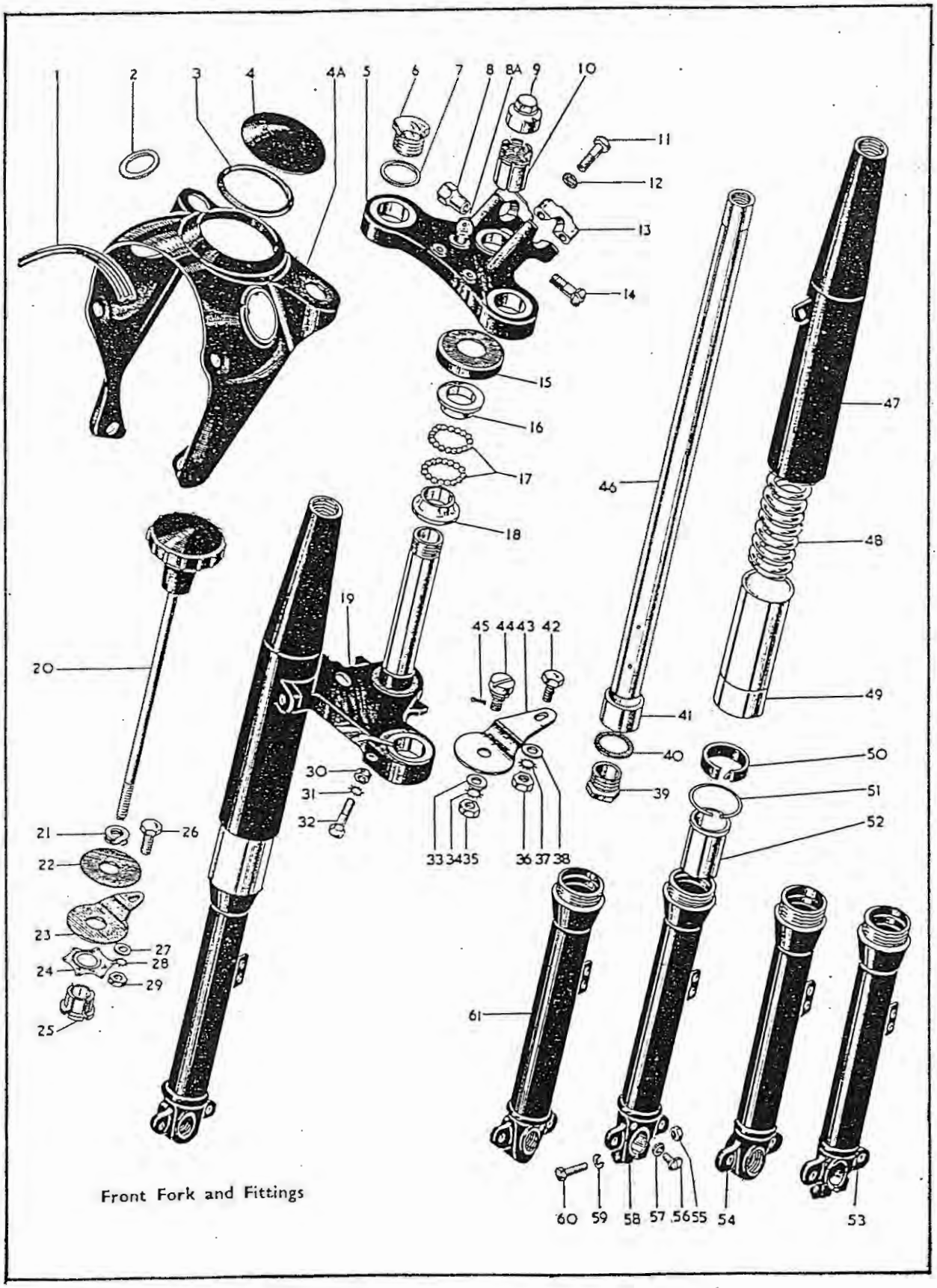

Front Fork and Fittings

Front Hub and Wheel Fittings
Rear Hub and Wheel Fittings
Mudguards Chainguard Toolbox etc.
Mudguards Chainguard Oil Tank etc.
Mudguards Oil Tank and Rear Chainguard
Mudguards Chainguard Handrail etc.
Petrol Tank Handlebar Rear Brake
Handlebar Petrol Tank Dual Seat etc.
Petrol Tank Front Mudguard
Safety Bars Carrier Handrail
Legshields
Tools and Sundries
Electrical Equipment
Carrier and Pannier

Plate 16—*continued.* FRONT FORK and FITTINGS

B31 B32 B34 (7″ Brake) B33 (8″ Brake) Swinging Arm Frame (1954/5)
B31 B33 Swinging Arm (7″ Brake) (1956)

Plate Ref. Number.	Models.	Part No.	Description.	Number per set.
38	B31 B33	2–923	Steering stop plate plug washer (plain) (1956)	1
39	B Group	29–5283	Front fork shaft plug (1954/5)	2
39	B31 B33	29–5283	Front fork shaft plug (1956)	2
40	B Group	29–5338	Front fork shaft plug washer (1954/5)	2
40	B31 B33	29–5338	Front fork shaft plug washer (1956)	2
41	B Group	29–5347	Front fork bottom bearing (1954/5)	2
41	B31 B33	29–5347	Front fork bottom bearing (1956)	2
42	B31 B33	28–2338	Steering damper anchor plate bolt (1956)	1
43	B31 B33	42–5019	Steering stop plate (1956)	1
44	B31 B33	42–5020	Steering stop plate locating plug (1956)	1
45	B31 B33	35–702	Steering stop plate locating plug split pin (1956)	1
46	B Group	89–5061	Front fork shaft (1954/5)	1
46	B31 B33	89–5061	Front fork shaft (1956)	2
47	B Group	67–5009	Front fork outer sleeve (1954/5)	2
47	B31 B33	67–5009	Front fork outer sleeve (1956)	2
48	B Group	65–5390	Front fork spring (1954/5)	2
48	B31 B33	65–5390	Front fork spring (1956)	2
49	B Group	29–5310	Front fork oil seal holder (1954/5)	2
49	B31 B33	29–5310	Front fork oil seal holder complete (1956)	2
50	B Group	29–5313	Front fork oil seal (1954/5)	2
50	B31 B33	29–5313	Front fork oil seal (1956)	2
51	B Group	29–5320	Front fork top bearing circlip (1954/5)	2
51	B31 B33	29–5320	Front fork top bearing circlip (1956)	2
52	B Group	65–5424	Front fork top bearing (1954/5)	2
52	B31 B33	65–5424	Front fork top bearing (1956)	2
53	B33	67–5057	Fork sliding tube (nearside) complete (1954/5)	1
53	B33	42–5051	Fork sliding tube (nearside) (1956)	1
54	B33	65–5420	Fork sliding tube (offside) complete (1954/5)	1
55	B31 B33	2–46	Fork end bolt nut	1
56	B31 B33	2–1309	Fork end drain plug	2
57	B31 B33	2–292	Fork end drain plug washer (fibre)	2
58	B31 B32 B34	65–5408	Fork sliding tube (nearside) complete (1954/5)	1
58	B31	42–5051	Fork sliding tube (nearside) complete (1956)	1
59	B Group	2–2903	Fork end bolt washer (spring) (1954/5)	1
59	B31 B33	2–2903	Fork end bolt washer (spring) (1956)	1
60	B Group	65–5295	Fork end bolt (nearside) (1954/5)	1
60	B31 B33	2–803	Fork end bolt (nearside) (1956)	1
61	B31 B32 B34	65–5410	Front fork sliding tube (offside) complete (1954/5)	1
61	B33	42–5050	Front fork sliding tube (offside) (1956)	1

Plate 17 FRONT HUB and WHEEL FITTINGS

B31 Rigid and Spring
B32 B34 Rigid Frame (Competition)
B31 B32 B34 Swinging Arm (1954/5)
B32 B34 Swinging Arm (1956)

Plate Ref. Number.	Models.	Part No.	Description.	Number per set.
—	B31	65–5870	Front wheel complete (less brake and tyre) (1954/5)	1
—	B32 B34	65–5015	Front wheel complete (less brake and tyre) (1954/6)	1
1	B31	65–5872	Front wheel spoke (long) (1954/5)	20
1	B32 B34	65–5537	Front wheel spoke (long) (1954/6)	20
2	B31 B32 B34	27–6813	Front wheel spoke nipple (1954/5)	20
2	B32 B34 (swinging arm)	27–6813	Front wheel spoke nipple (1956)	20
3	B31 B32 B34	65–5929	Front hub spindle (1954/5)	1
3	B32 B34 (swinging arm)	65–5929	Front hub spindle (1956)	1
4	B31 B32 B34	65–5892	Front hub spindle distance piece (1954/5)	1
4	B32 B34 (swinging arm)	65–5892	Front hub spindle distance piece (1956)	1
5	B31 B32 B34	65–5893	Front brake cover plate nut (1954/5)	1
5	B32 B34 (swinging arm)	65–5893	Front brake cover plate nut (1956)	1
6	B31 B32 B34	65–5890	Front hub distance collar (1954/5)	1

Plate 17—*continued* FRONT HUB and WHEEL FITTINGS

B31 Rigid and Spring
B32 B34 Rigid Frame (Competition)
B31 B32 B34 Swinging Arm (1954/5)
B32 B34 Swinging Arm (1956)

Plate Ref. Number.	Models.	Part No.	Description.	Number per set.
6	B32 B34 (swinging arm)	65–5890	Front hub distance collar (1956)	1
7	B31 B32 B34	65–5888	Front hub felt washer retaining cup (1954/5)	1
7	B32 B34 (swinging arm)	65–5888	Front hub felt washer retaining clip (1956)	1
8	B31 B32 B34	65–5886	Front hub washer (felt) (1954/5)	1
8	B32 B34 (swinging arm)	65–5886	Front hub washer (felt) (1956)	1
9	B31 B32 B34	65–5887	Front hub felt washer retaining ring (1954/5)	1
9	B32 B34 (swinging arm)	65–5887	Front hub felt washer retaining ring (1956)	1
10	B31 B32 B34	65–5883	Front hub ball journal (1954/5)	1
10	B32 B34 (swinging arm)	65–5883	Front hub ball journal (1956)	1
11	B31 B32 B34	65–5889	Front hub spindle sleeve (1954/5)	1
11	B32 B34 (swinging arm)	65–5889	Front hub spindle sleeve (1956)	1
12	B31 B32 B34	65–5876	Front hub shell complete with spindle and bearings (1954/5)	1
12	B32 B34 (swinging arm)	65–5876	Front hub shell complete with spindle and bearings (1956)	1
13	B31 B32 B34	15–5290	Front hub grease nipple (1954/5)	1
13	B32 B34 (swinging arm)	15–5290	Front hub grease nipple (1956)	1
14	B31 B32 B34	65–5884	Front hub bearing thrust washer (1954/5)	1
14	B32 B34 (swinging arm)	65–5884	Front hub bearing thrust washer (1956)	1
15	B31 B32 B34	65–5883	Front hub ball journal (1954/5)	1
15	B32 B34 (swinging arm)	65–5883	Front hub ball journal (1956)	1
16	B31 B32 B34	65–5885	Front hub bearing retaining ring (1954/5)	1
16	B32 B34 (swinging arm)	65–5885	Front hub bearing retaining ring (1956)	1
17	B31 B32 B34	65–5891	Front hub distance piece (1954/5)	1
17	B32 B34 (swinging arm)	65–5891	Front hub distance piece (1956)	1
18	B31	65–5910	Front wheel spoke (short) (1954/5)	20
18	B32 B34	90–5584	Front wheel spoke (short) (1954/5)	20
18	B32 B34 (swinging arm)	90–5584	Front wheel spoke (short) (1956)	20
19	B31 B32 B34	27–6813	Front wheel spoke nipple (1954/5)	20
19	B32 B34 (swinging arm)	27–6813	Front wheel spoke nipple (1956)	20
20	B31	67–5543	Front wheel rim (1954/5)	1
20	B32 B34	65–5916	Front wheel rim (1956)	1
20	B32 B34 (swinging arm)	65–5916	Front wheel rim (1956)	1
21	B31 B32 B34	65–5899	Front brake shoe fulcrum pin (1954/5)	1
21	B32 B34 (swinging arm)	65–5899	Front brake shoe fulcrum pin (1956)	1
22	B31 B32 B34	35–6436	Front brake shoe lining rivet (1954/5)	14
22	B32 B34 (swinging arm)	35–6436	Front brake shoe lining rivet (1956)	14
23	B31 B32 B34	65–5903	Front brake shoe lining (1954/5)	2
23	B32 B34 (swinging arm)	65–5903	Front brake shoe lining (1956)	2
24	B31 B32 B34	65–5901	Front brake shoe with lining (1954/5)	2
24	B32 B34 (swinging arm)	65–5901	Front brake shoe with lining (1956)	2
25	B31 B32 B34	65–5895	Front brake cover plate (1954/5)	1
25	B32 B34 (swinging arm)	65–5895	Front brake cover plate (1956)	1
26	B31 B32 B34	65–5893	Front brake cover plate nut (1954/5)	1
26	B32 B34 (swinging arm)	65–5893	Front brake cover plate nut (1956)	1
27	B31 B32 B34	24–8045	Front brake fulcrum pin serrated washer (1954/5)	1
27	B32 B34 (swinging arm)	24–8045	Front brake fulcrum pin serrated washer (1956)	1
28	B31 B32 B34	24–5860	Front brake fulcrum pin nut (1954/5)	1
28	B32 B34 (swinging arm)	24–5860	Front brake fulcrum pin nut (1956)	1
29	B31 B32 B34	15–431	Front brake shoe cam washer (plain) (1954/5)	1
29	B32 B34 (swinging arm)	15–431	Front brake shoe cam washer (plain) (1956)	1
30	B31 B32 B34	66–4708	Front brake shoe cam washer (shakeproof) (1954/5)	1
30	B32 B34 (swinging arm)	66–4708	Front brake shoe cam washer (shakeproof) (1956)	1
31	B31 B32 B34	2–440	Front brake shoe cam nut (1954/5)	1
31	B32 B34 (swinging arm)	2–440	Front brake shoe cam nut (1956)	1
32	B31 B32 B34	29–5871	Front brake lever toggle (1954/5)	1
32	B32 B34 (swinging arm)	29–5871	Front brake lever toggle (1956)	1
33	B31 B32 B34	2–510	Front brake lever toggle screw (1954/5)	1
33	B32 B34 (swinging arm)	2–510	Front brake lever toggle screw (1956)	1
34	B31 B32 B34	65–5907	Front brake operating lever (1954/5)	1
34	B32 B34 (swinging arm)	65–5907	Front brake operating lever (1956)	1
35	B31 B32 B34	2–1462	Front brake operating lever toggle washer (shakeproof) (1954/5)	1
35	B32 B34 (swinging arm)	2–1462	Front brake operating lever toggle washer (shakeproof) (1956)	1
36	B31 B32 B34	2–443	Front brake lever toggle nut (1954/5)	1
36	B32 B34 (swinging arm)	2–443	Front brake lever toggle nut (1956)	1
37	B31 B32 B34	65–5674	Front brake shoe cam bearing oil hole clip (1954/5)	1
37	B32 B34 (swinging arm)	65–5674	Front brake shoe cam bearing oil hole clip (1956)	1
38	B31 B32 B34	65–5904	Front brake shoe spring (1954/5)	2
38	B32 B34 (swinging arm)	65–5904	Front brake shoe spring (1956)	2
39	B31 B32 B34	65–5905	Front brake shoe cam complete (1954/5)	1
39	B32 B34 (swinging arm)	65–5905	Front brake shoe cam complete (1956)	1

B31 Rigid and Spring
B32 B34 Rigid Frame (Competition)
B31 B32 B34 Swinging Arm Frame (1954/5)
B32 B34 Swinging Arm Frame (1956)

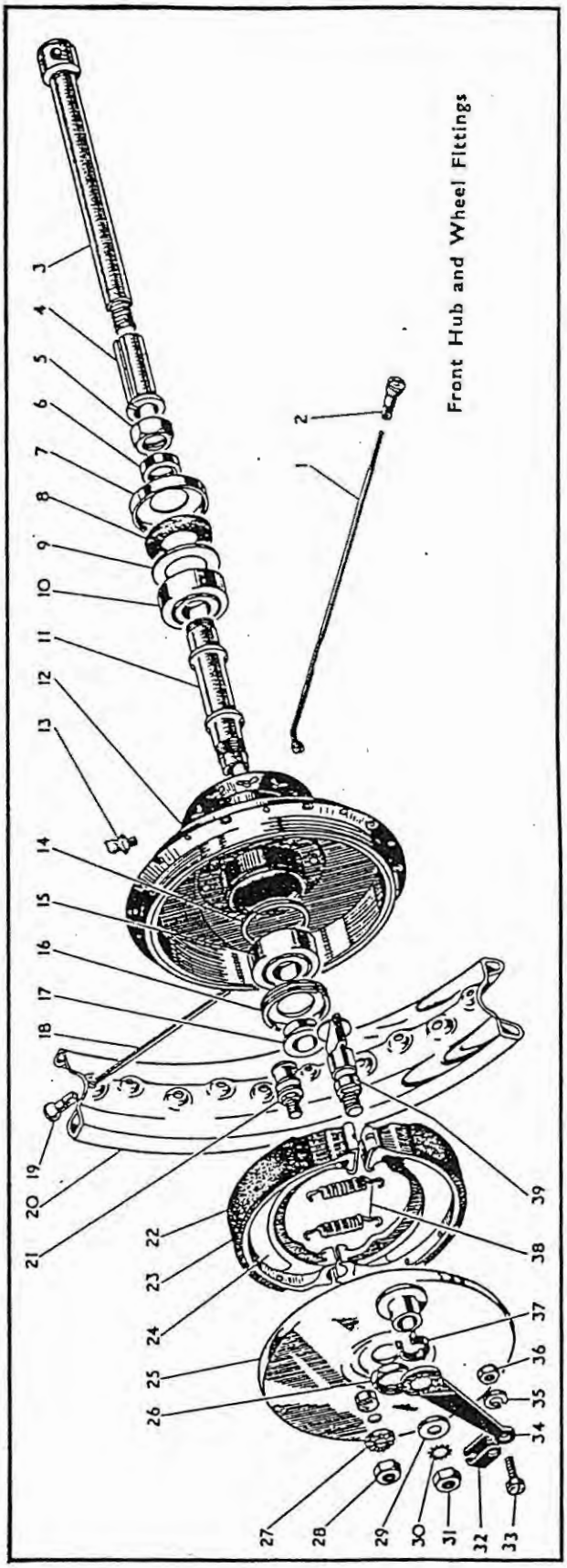

B33 Rigid and Spring
B33 Swinging Arm Frame (1954/5)

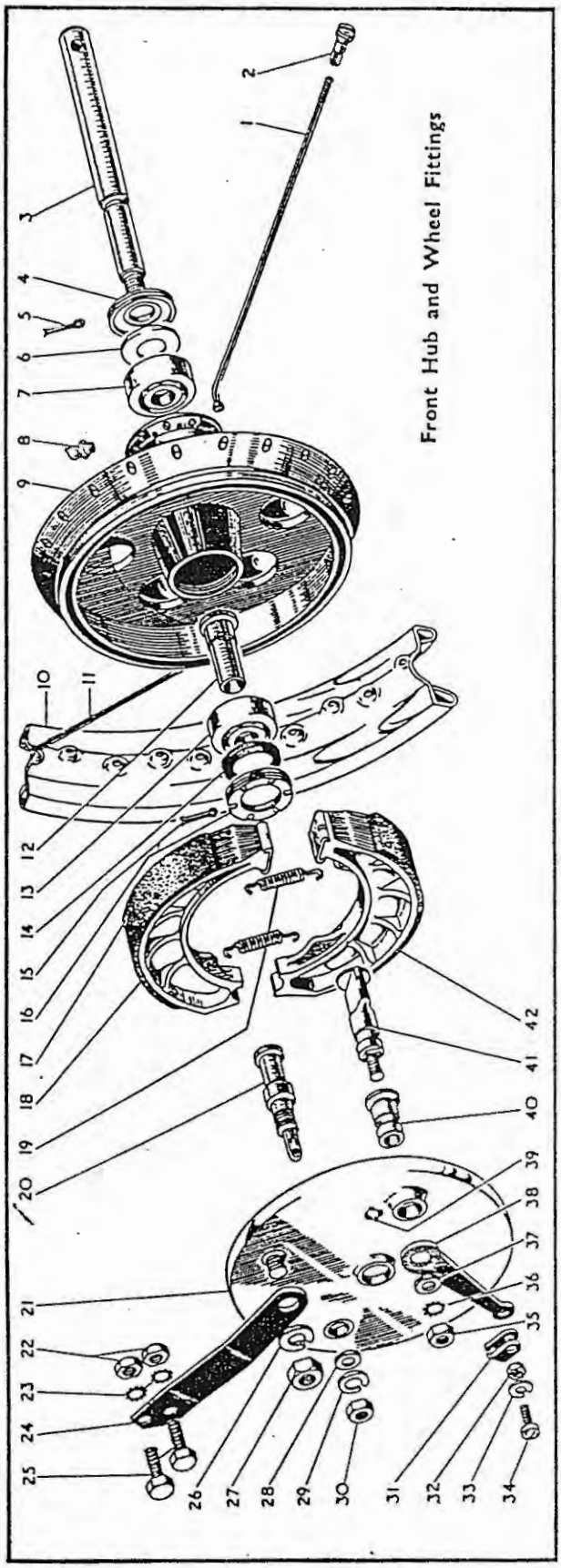

Plate 18 FRONT HUB and WHEEL FITTINGS

B33 Rigid and Spring
B33 Swinging Arm Frame (1954/5)

Plate Ref. Number.	Models.	Part No.	Description.	Number per set.
—	B33	67–5605	Front wheel complete (less brake and tyre)	1
1	B33	67–5544	Front wheel spoke (short)	20
2	B33	27–6813	Front wheel spoke nipple	40
3	B33	67–5566	Front hub spindle	1
4	B33	67–5561	Front hub bearing locking ring (nearside)	1
5	B33	35–701	Front hub bearing locking ring retaining pin	1
6	B33	67–5563	Front hub bearing oil retaining washer (nearside)	1
7	B33	65–5883	Front hub ball journal	1
8	B33	15–5290	Front hub grease nipple	1
9	B33	66–5556	Front hub shell complete (with spindle, sleeve and bearings)	1
10	B33	67–5543	Front wheel rim	1
11	B33	67–5606	Front wheel spoke (long)	20
12	B33	67–5565	Front hub spindle sleeve	1
13	B33	65–5883	Front hub ball journal	1
14	B33	67–5564	Front hub bearing oil retaining washer (offside)	1
15	B33	35–701	Front hub bearing locking ring retaining pin	1
16	B33	67–5562	Front hub bearing locking ring (offside)	1
17	B33	67–5575	Front brake shoe lining rivet	14
18	B33	67–5571	Front brake shoe lining	2
19	B33	65–5904	Front brake shoe spring	2
20	B33	67–5576	Front brake fulcrum and adjusting pin	1
21	B33	67–5555	Front brake cover plate with fixed fittings	1
22	B33	2–49	Front brake anchor strap nut	2
23	B33	36–382	Front brake anchor strap nut washer	2
24	B33	67–5578	Front brake anchor strap	1
25	B33	32–194	Front brake anchor strap bolt	2
26	B33	15–716	Front brake cover plate and anchor strap spring washer	1
27	B33	15–541	Front brake cover plate and anchor strap nut	1
28	B33	25–6014	Front brake fulcrum and adjusting pin washer (plain)	1
29	B33	35–37	Front brake fulcrum and adjusting pin spring washer	1
30	B33	2–2527	Front brake fulcrum and adjusting pin nut	1
31	B33	29–5871	Front brake lever toggle	1
32	B33	2–443	Front brake lever toggle nut	1
33	B33	2–1462	Front brake lever toggle washer	1
34	B33	2–510	Front brake lever toggle screw	1
35	B33	2–440	Front brake shoe cam nut	1
36	B33	66–4708	Front brake shoe cam washer (shakeproof)	1
37	B33	15–431	Front brake shoe cam washer (plain)	1
38	B33	65–5907	Front brake operating lever	1
39	B33	28–2080	Front brake fulcrum pin grease nipple	1
40	B33	67–5567	Front brake cam bearing	1
41	B33	67–5572	Front brake shoe cam complete	1
42	B33	67–5558	Front brake shoe with lining	1

Plate 19 FRONT HUB and WHEEL FITTINGS

B31 B33 Swinging Arm (1956)

Plate Ref. Number.	Models.	Part No.	Description.	Number. per set.
—	B31 B33	42–5634	Front wheel complete less tyre	1
1	B31 B33	42–5590	Front hub spindle	1
2	B31 B33	42–5637	Front wheel rim	1
3	B31 B33	42–5580	Wheel bearing nut (nearside)	1
4	B31 B33	89–3022	Front hub bearing	2
5	B31 B33	42–5646	Hub bearing circlip	2
6	B31 B33	42–5600	Front hub	1
7	B31 B33	42–5606	Hub bearing sleeve (offside)	1

B31 B33 Swinging Arm (1956)

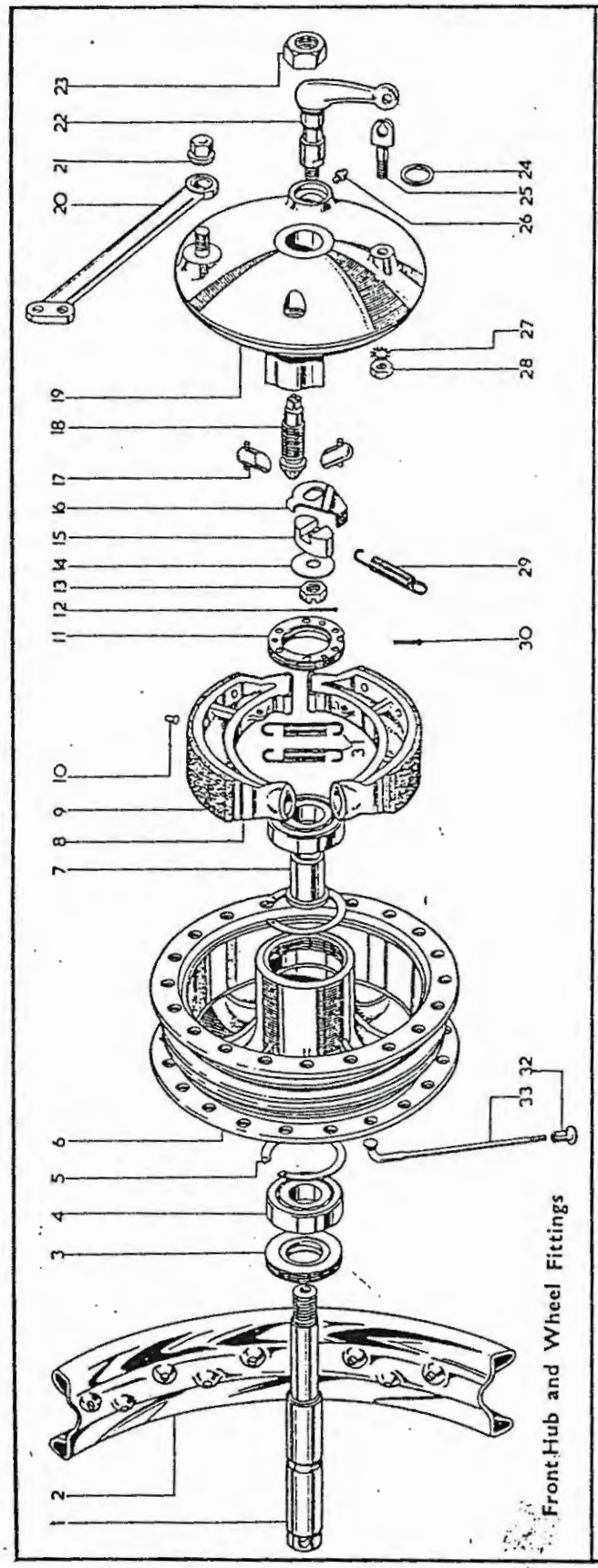

Front Hub and Wheel Fittings

B31 B33 Swinging Arm (1956)

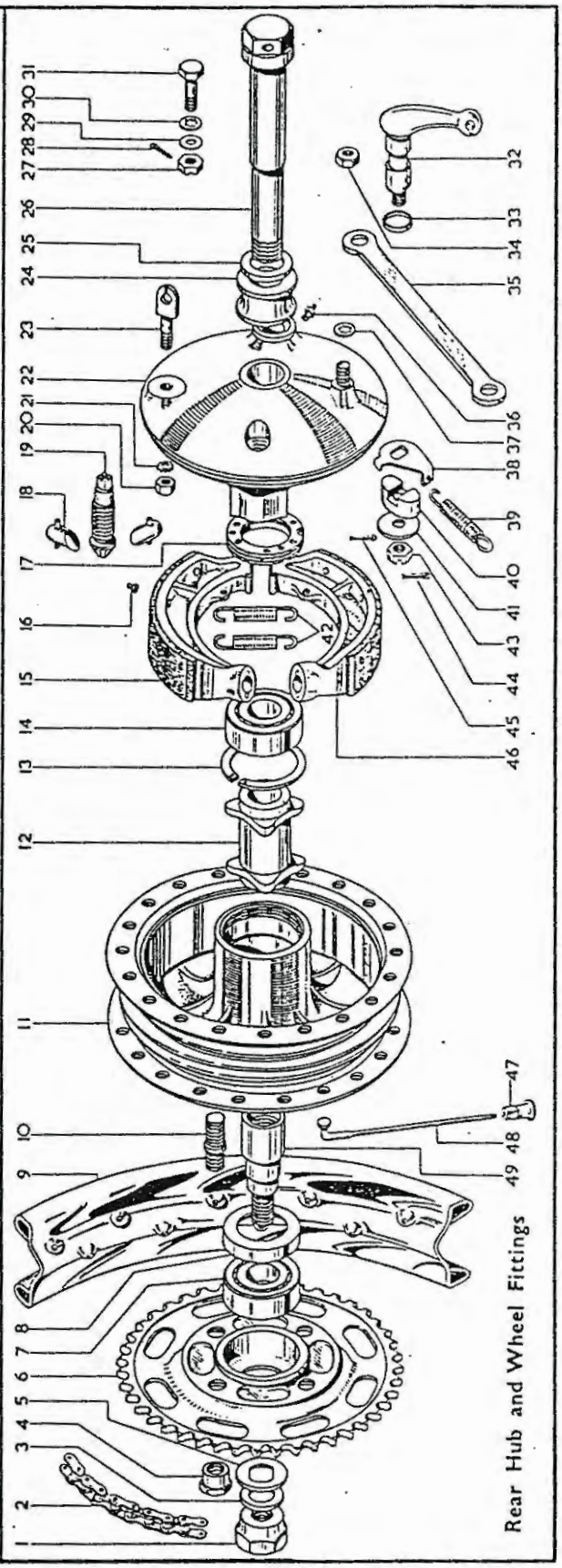

Rear Hub and Wheel Fittings

Plate 19—*continued* FRONT HUB and WHEEL FITTINGS

B31 B33 Swinging Arm (1956)

Plate Ref. Number.	Models.	Part No.	Description.	Number per set.
8	B31 B33	42-5618	Brake shoe complete with linings	2
9	B31 B33	42-5620	Brake shoe linings	2
10	B31 B33	42-5638	Brake shoe lining rivets	16
11	B31 B33	42-5583	Wheel bearing nut (offside)	1
12	B31 B33	35-608	Brake cam spindle split pin	1
13	B31 B33	21-5304	Brake cam spindle nut (slotted)	1
14	B31 B33	42-5629	Brake cam spindle washer (plain)	1
15	B31 B33	42-5594	Brake cam	1
16	B31 B33	42-5628	Brake return spring stop plate	1
17	B31 B33	42-5623	Brake shoe wedge assembly	2
18	B31 B33	42-5617	Brake shoe adjuster	1
19	B31 B33	42-5614	Brake plate	1
20	B31 B33	42-5593	Front brake anchor strap	1
21	B31 B33	42-6083	Anchor strap and brake plate bolt nut	1
22	B31 B33	42-5626	Brake lever and camshaft spindle assembly	1
23	B31 B33	42-5621	Front hub spindle nut	1
24	B31 B33	42-5630	Brake cam spindle washer (felt)	1
25	B31 B33	42-5592	Front brake cable abutment	1
26	B31 B33	28-2080	Brake plate grease nipple	1
27	B31 B33	36-382	Front brake cable abutment washer (shakeproof)	1
28	B31 B33	2-49	Front brake cable abutment nut	1
29	B31 B33	42-5631	Brake return spring	1
30	B31 B33	35-702	Wheel bearing nut split pin (offside)	1
31	B31 B33	42-5622	Brake shoe spring	2
32	B31 B33	27-6810	Front wheel spoke nipple	40
33	B31 B33	42-5635	Front wheel spoke	40

Plate 20 REAR HUB and WHEEL FITTINGS

B31 B33 Swinging Arm (1956)

Plate Ref. Number.	Models.	Part No.	Description.	Number per set.
—	B31 B33	42-6106	Rear wheel complete (less tyre)	1
1	B31 B33	42-6077	Fixed spindle nut	1
2	B31 B33	66-9162	Transmission chain (rear)	1
3	B31 B33	42-6078	Fixed spindle washer (small)	1
4	B31 B33	42-6095	Rear hub sprocket nut (spherical)	4
5	B31 B33	42-6091	Fixed spindle washer (large)	1
6	B31 B33	42-6087	Rear hub sprocket complete	1
7	B31 B33	89-3022	Rear hub bearing	1
8	B31 B33	42-6105	Rear hub grease retainer	2
9	B31 B33	42-5637	Wheel rim	1
10	B31 B33	42-6082	Rear hub sprocket stud	4
11	B31 B33	42-6088	Rear hub	1
12	B31 B33	42-6085	Rear hub spindle distance piece	1
13	B31 B33	42-5646	Hub bearing circlip	1
14	B31 B33	89-3022	Rear hub bearing	1
15	B31 B33	42-5620	Brake shoe lining	2
16	B31 B33	42-5638	Brake shoe lining rivet	16
17	B31 B33	42-5583	Rear wheel bearing nut	1
18	B31 B33	42-5623	Brake shoe wedge assembly	2
19	B31 B33	42-5617	Brake shoe adjuster	1
20	B31 B33	2-49	Brake cable abutment nut	1
21	B31 B33	36-382	Brake cable abutment nut washer	1
22	B31 B33	42-5614	Brake plate	—
23	B31 B33	42-5592	Brake cable abutment	1
24	B31 B33	42-6075	Rear hub slip collar	1

Plate 20—*continued* REAR HUB and WHEEL FITTINGS

B31 B33 Swinging Arm (1956)

Plate Ref. Number.	Models.	Part No.	Description.	Number per set.
25	B31 B33	42–6074	Rear hub spindle washer	1
26	B31 B33	42–6071	Rear hub spindle assembly	1
27	B31 B33	24–5860	Anchor strap swinging arm bolt nut	1
28	B31 B33	35–705	Brake anchor strap swinging arm bolt split pin	1
29	B31 B33	15–431	Brake anchor strap swinging arm bolt washer (plain)	1
30	B31 B33	66–4708	Brake anchor strap swinging arm bolt washer (shakeproof)	1
31	B31 B33	3–855	Brake anchor strap swinging arm bolt	1
32	B31 B33	42–5626	Brake lever and cam spindle assembly	1
33	B31 B33	42–5630	Brake cam spindle washer (felt)	1
34	B31 B33	21–5105	Brake cam anchor strap bolt nut	1
35	B31 B33	42–6084	Brake cam anchor strap	1
36	B31 B33	28–2080	Brake grease nipple	1
37	B31 B33	66–4708	Rear brake anchor strap bolt washer (shakeproof)	1
38	B31 B33	42–5628	Brake return spring stop plate	1
39	B31 B33	42–5631	Rear brake return spring	1
40	B31 B33	42–5594	Rear brake cam	1
41	B31 B33	42–5629	Brake cam spindle washer	1
42	B31 B33	42–5622	Brake shoe spring	2
43	B31 B33	21–5304	Brake cam spindle nut	1
44	B31 B33	35–698	Brake cam spindle split pin	1
45	B31 B33	35–702	Wheel bearing nut split pin (offside)	1
46	B31 B33	42–5618	Rear brake shoe complete with linings	2
47	B31 B33	27–6813	Spoke nipple	40
48	B31 B33	42–5635	Wheel spoke	40
49	B31 B33	42–6076	Fixed spindle	1

Plate 21 REAR HUB and WHEEL FITTINGS

B31 B33 Rigid Frame

Plate Ref. Number.	Models.	Part No.	Description.	Number per set.
—	B31 B33	65–6285	Rear wheel complete (less brake and tyre)	1
1	B31 B33	29–7365	Rear brake rod with toggle end	1
2	B31 B33	2–2395	Rear brake rod nut	1
3	B31 B33	15–1312	Rear brake rod spring	1
4	B31 B33	2–46	Rear brake anchor strap nut	3
5	B31 B33	65–6274	Rear brake rod swivel pin	1
6	B31 B33	29–7368	Rear brake adjuster ferrule	1
7	B31 B33	2–440	Rear brake operating lever nut	1
8	B31 B33	66–4708	Rear brake operating lever washer	1
9	B31 B33	15–431	Rear brake operating lever washer	1
10	B31 B33	65–6279	Rear brake operating lever	1
11	B31 B33	65–5674	Rear brake cam bearing oil hole clip	1
12	B31 B33	65–6276	Rear brake cover plate	1
13	B31 B33	65–5905	Rear brake shoe cam	1
14	B31 B33	65–6263	Rear wheel rim	1
15	B31 B33	27–6813	Spoke nipple	40
16	B31 B33	65–5901	Brake shoe with lining	2
17	B31 B33	35–6436	Brake shoe rivet	14
18	B31 B33	65–5903	Brake shoe lining	2
19	B31 B33	65–5904	Brake shoe spring	2
20	B31 B33	65–9191	Transmission chain	1
21	B31 B33	15–5290	Rear hub grease nipple	1
22	B31 B33	65–6289	Hub shell with bearings	1
23	B31 B33	24–7012	Wheel spoke (long)	20
24	B31 B33	65–6136	Hub spindle nut	1
25	B31 B33	27–6738	Rear hub adjusting plate	1

Plate 21

REAR HUB and WHEEL FITTINGS

B31 B33 Rigid Frame

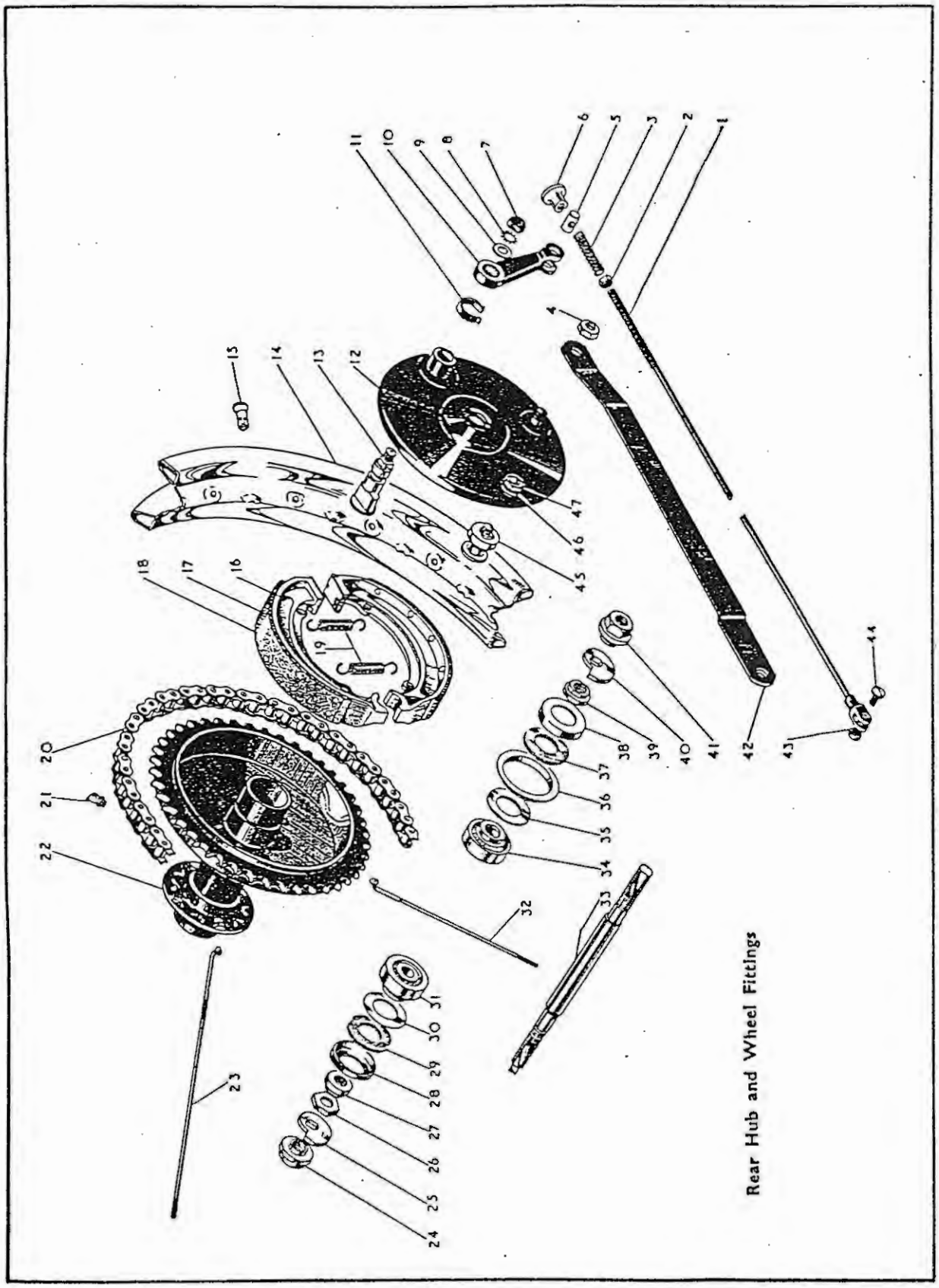

Rear Hub and Wheel Fittings

Plate 21—*continued* REAR HUB and WHEEL FITTINGS

B31 B33 Rigid Frame

Plate Ref. Number.	Models.	Part No.	Description.	Number per set.
26	B31 B33	27–6716	Rear hub spindle locknut	1
27	B31 B33	65–5670	Rear hub adjusting sleeve	1
28	B31 B33	29–5710	Rear hub bearing retaining cup	1
29	B31 B33	24–7047	Rear hub washer (felt)	1
30	B31 B33	29–5715	Rear hub bearing retaining washer	1
31	B31 B33	24–705S	Rear hub bearing	1
32	B31 B33	65–6027	Wheel spoke (short)	20
33	B31 B33	65–6161	Rear hub spindle	1
34	B31 B33	24–705S	Rear hub bearing	1
35	B31 B33	29–5715	Rear hub bearing retaining washer	1
36	B31 B33	29–5905	Hub grease flinger washer	1
37	B31 B33	24–7047	Rear hub washer (felt)	1
38	B31 B33	29–5710	Rear hub bearing retaining cup	1
39	B31 B33	65–5670	Rear hub adjusting sleeve	1
40	B31 B33	27–673S	Rear hub adjusting plate	1
41	B31 B33	65–6136	Rear hub spindle nut	1
42	B31 B33	65–7062	Rear brake anchor strap	1
43	B31 B33	2–443	Rear brake rod toggle end nut	1
44	B31 B33	2–510	Rear brake rod toggle end screw	1
45	B31 B33	65–5899	Rear brake shoe fulcrum pin	1
46	B31 B33	24–8045	Fulcrum pin washer	1
47	B31 B33	24–5S60	Brake shoe fulcrum pin locknut	1

Plate 22 REAR HUB and WHEEL FITTINGS

B31 B33 Spring Frame

Plate Ref. Number.	Models.	Part No.	Description.	Number per set.
—	B31 B33	65–6300	Rear wheel complete (less brake and tyre)	1
1	B31 B33	65–7071	Rear brake rod with toggle end	1
2	B31 B33	24–8045	Rear brake shoe fulcrum pin washer	1
3	B31 B33	24–5S60	Rear brake shoe fulcrum pin locknut	1
4	B31 B33	2–2395	Rear brake rod spring nut	1
5	B31 B33	67–6074	Rear hub bearing sleeve nut	1
6	B31 B33	15–1312	Rear brake rod spring	1
7	B31 B33	67–6073	Rear hub spindle nut complete	1
8	B31 B33	65–6279	Rear brake operating lever	1
9	B31 B33	65–6274	Rear brake screw swivel pin	1
10	B31 B33	67–7031	Adjusting nut extension tube	1
11	B31 B33	29–736S	Rear brake adjuster ferrule	1
12	B31 B33	2–440	Rear brake operating lever nut	1
13	B31 B33	66–4708	Rear brake operating lever washer (shakeproof)	1
14	B31 B33	15–431	Rear brake operating lever washer (plain)	1
15	B31 B33	67–608S	Rear brake anchor strap	1
16	B31 B33	65–5674	Rear brake cam bearing oil clip	1
17	B31 B33	67–6180	Rear wheel cover plate complete	1
18	B31 B33	65–5905	Rear brake shoe cam complete	1
19	B31 B33	65–5901	Rear brake shoe complete	2
20	B31 B33	65–5903	Rear brake shoe lining	2
21	B31 B33	35–6436	Rear brake shoe lining rivet	14
22	B31 B33	15–817	Rear transmission chain	1
23	B31 B33	89–3022	Brake drum and chainwheel ball bearing	1
24	B31 B33	67–6072	Ball bearing shim	1
25	B31 B33	67–6067	Ball bearing retaining ring	1
26	B31 B33	67–6101	Driving flange	1
27	B31 B33	67–6076	Rear hub bearing lockring	1
28	B31 B33	65–5883	Rear hub bearing	1

Plate 22

REAR HUB and WHEEL FITTINGS

B31 B33 Spring Frame

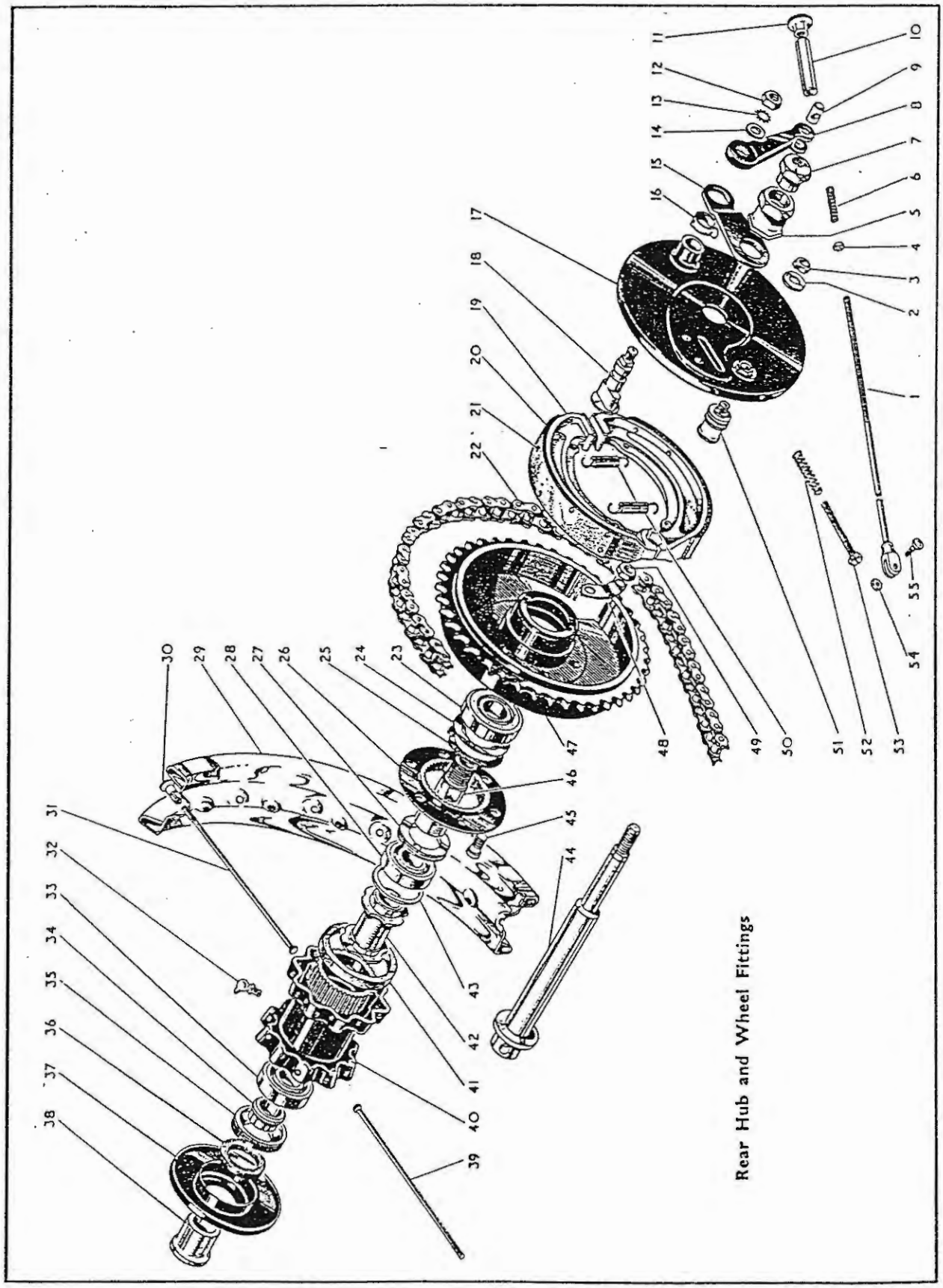

Rear Hub and Wheel Fittings

Plate 22—*continued* REAR HUB and WHEEL FITTINGS

B31 B33 Spring Frame

Plate Ref. Number.	Models.	Part No.	Description.	Number per set.
29	B31 B33	67-6005	Rear wheel rim	1
30	B31 B33	27-6813	Rear wheel spoke nipple	40
31	B31 B33	65-6303	Rear wheel spoke (short)	20
32	B31 B33	15-5290	Rear hub grease nipple	1
33	B31 B33	65-5883	Rear hub bearing	1
34	B31 B33	67-6077	Hub collar (right-hand)	1
35	B31 B33	67-6076	Rear hub bearing lockring	1
36	B31 B33	67-6075	Rear hub felt washer	1
37	B31 B33	67-6128	Hub shell cover assembled	1
38	B31 B33	67-6066	Hub distance piece	1
39	B31 B33	65-6302	Rear wheel spoke (long)	20
40	B31 B33	67-6126	Rear hub shell complete with bearings	1
41	B31 B33	67-6051	Rear hub shell washer (rubber)	1
42	B31 B33	67-6061	Bearing distance tube and retainers	1
43	B31 B33	65-5884	Rear hub bearing thrust washer	1
44	B31 B33	67-6164	Rear hub spindle	1
45	B31 B33	67-6038	Brake drum securing bolt	6
46	B31 B33	67-6060	Rear hub bearing sleeve	1
47	B31 B33	65-6294	Rear brake drum and chainwheel	1
48	B31 B33	67-6039	Brake drum securing bolt locking strip	3
49	B31 B33	2-452	Brake drum securing bolt nut	6
50	B31 B33	65-5904	Rear shoe spring	2
51	B31 B33	65-5899	Rear brake shoe fulcrum pin	1
52	B31 B33	15-1312	Rear wheel adjusting spring	2
53	B31 B33	66-4603	Rear wheel adjusting screw	2
54	B31 B33	2-443	Rear brake rod fork screw nut	1
55	B31 B33	2-510	Rear brake rod fork screw	1

Plate 23 REAR HUB and WHEEL FITTINGS

B32 B34 Rigid Frame (Competition)

Plate Ref. Number.	Models.	Part No.	Description.	Number per set.
—	B32 B34	42-6001	Rear wheel complete (less brake and tyre) (WM3-19)	1
1	B32 B34	2-440	Rear brake operating lever nut	1
2	B32 B34	66-4708	Rear brake operating lever washer (shakeproof)	1
3	B32 B34	15-431	Rear brake operating lever washer (plain)	1
4	B32 B34	65-5674	Cam bearing oil hole clip	1
5	B32 B34	65-5905	Rear brake cam	1
6	B32 B34	35-6436	Brake shoe lining rivet	14
7	B32 B34	65-5903	Brake shoe lining	2
8	B32 B34	15-8967	Transmission chain (rear)	1
9	B32 B34	65-5883	Rear hub ball bearing	1
10	B32 B34	67-6033	Hub ball journal shim	1
11	B32 B34	67-6034	Retaining spring ring	1
12	B32 B34	67-6030	Rear brake drum bearing sleeve	1
13	B32 B34	67-6101	Driving flange	1
14	B32 B34	65-5885	Hub ballrace retaining ring	1
15	B32 B34	27-6813	Spoke nipple	40
16	B32 B34	42-6002	Rear wheel rim (WM3-19)	1
17	B32 B34	67-6017	Rear wheel spoke (nearside)	20
18	B32 B34	15-5290	Rear hub grease nipple	1
19	B32 B34	67-6136	Rear hub shell complete with bearings	1
20	B32 B34	65-5883	Rear hub ball bearing	1
21	B32 B34	65-5887	Felt washer retaining ring	1

Plate 23

REAR HUB and WHEEL FITTINGS

B32 B34 Rigid Frame (Competition)

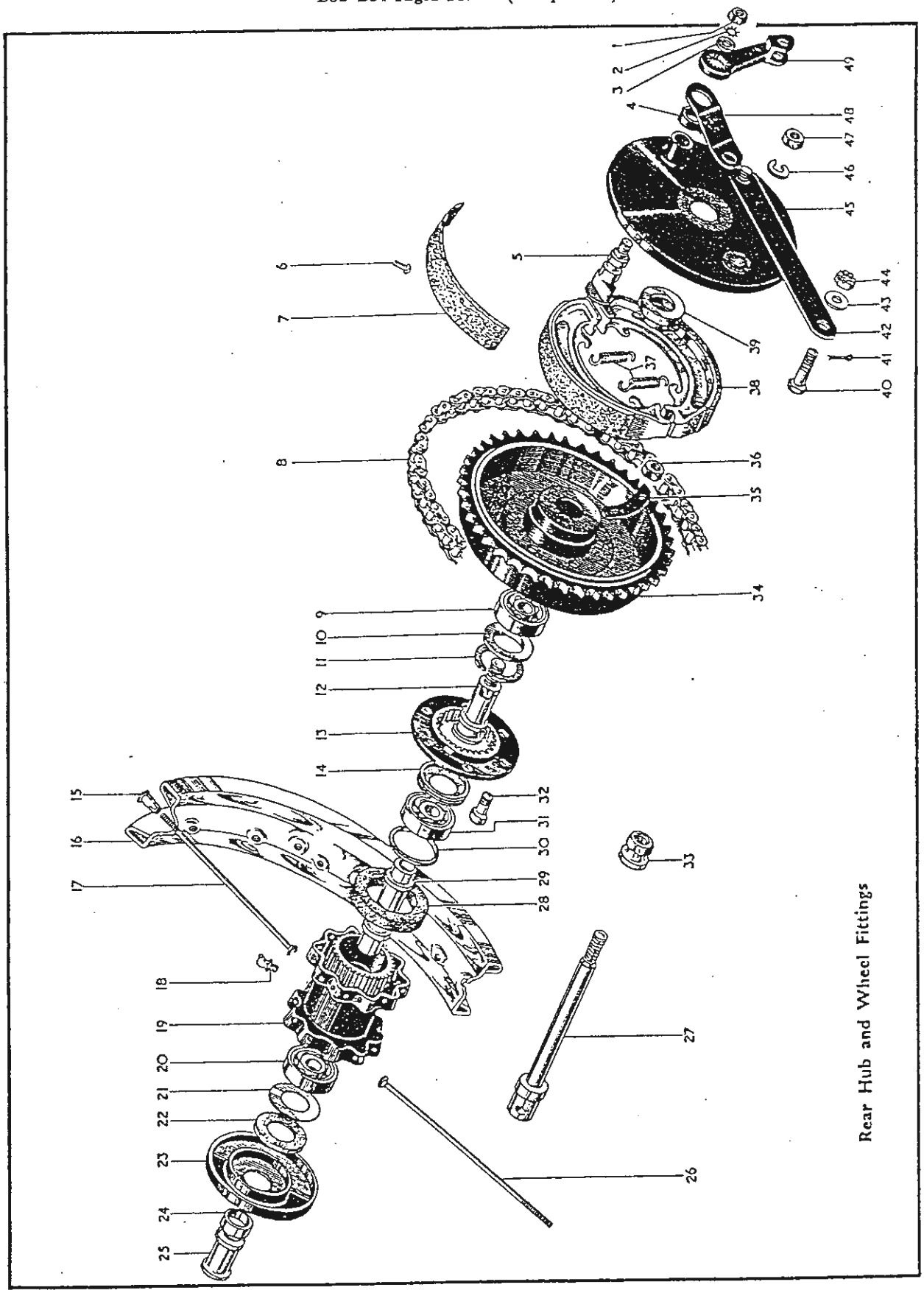

Rear Hub and Wheel Fittings

Plate 23—*continued* REAR HUB and WHEEL FITTINGS

B32 B34 Rigid Frame (Competition)

Plate Ref. Number.	Models.	Part No.	Description.	Number per set.
22	B32 B34	65–5886	Rear hub washer (felt)	1
23	B32 B34	67–6133	End cover	1
24	B32 B34	65–5890	Hub spindle distance collar	1
25	B32 B34	67–6028	Hub spindle distance sleeve	1
26	B32 B34	67–6016	Rear wheel spoke (offside)	20
27	B32 B34	67–6161	Rear hub spindle	1
28	B32 B34	67–6051	Hub shell washer (rubber)	1
29	B32 B34	67–6027	Hub spindle sleeve	1
30	B32 B34	65–5884	Hub bearing thrust washer	1
31	B32 B34	65–5883	Rear hub ball bearing	1
32	B32 B34	67–6038	Brake drum securing bolt	6
33	B32 B34	67–6031	Rear hub spindle nut	1
34	B32 B34	42–6024	Rear brake drum and chainwheel (42T)	1
35	B32 B34	67–6039	Brake drum bolt locking strip	3
36	B32 B34	2–452	Rear wheel securing bolt nut	6
37	B32 B34	65–5904	Rear brake spring	2
38	B32 B34	65–5901	Rear brake shoe complete	2
39	B32 B34	67–6032	Rear hub collar	1
40	B32 B34	42–7020	Rear brake anchor strap bolt	1
41	B32 B34	35–705	Anchor strap bolt split pin	1
42	B32 B34	42–7019	Rear brake anchor strap	1
43	B32 B34	2–2138	Anchor strap bolt washer (plain)	1
44	B32 B34	21–5304	Anchor strap bolt nut	1
45	B32 B34	42–6051	Rear brake cover plate	1
46	B32 B34	2–522	Rear brake anchor strap washer (spring)	1
47	B32 B34	2–46	Rear brake anchor strap nut	1
48	B32 B34	67–6046	Rear brake outrigger strap	1
49	B32 B34	65–6279	Rear brake operating lever	1

Plate 24 REAR HUB and WHEEL FITTINGS

B Group Swinging Arm Frame (1954/5)
B32 B34 Swinging Arm Frame (1956)

Plate Ref. Number.	Models.	Part No.	Description.	Number per set.
—	B31 B33	67–6011	Rear wheel complete (less brake and tyre) (1954/5)	1
—	B32 B34	42–6001	Rear wheel complete (less brake and tyre) (1956)	1
1	B Group	2–440	Rear brake operating lever nut (1954/5)	1
1	B32 B34	2–440	Rear brake operating lever nut (1956)	1
2	B Group	66–4708	Rear brake operating lever washer (shakeproof) (1954/5)	1
2	B32 B34	66–4708	Rear brake operating lever washer (shakeproof) (1956)	1
3	B Group	15–431	Rear brake operating lever washer (plain) (1954/5)	1
3	B32 B34	15–431	Rear brake operating lever washer (plain) (1956)	1
4	B Group	65–5674	Brake cam bearing oil hole clip (1954/5)	1
4	B32 B34	65–5674	Brake cam bearing oil hole clip (1956)	1
5	B Group	21–431	Brake anchor strap bolt nut (1954/5)	1
5	B32 B34	21–431	Brake anchor strap bolt nut (1956)	1
6	B Group	2–130	Brake anchor strap bolt washer (plain) (1954/5)	1
6	B32 B34	2–130	Brake anchor strap bolt washer (plain) (1956)	1
7	B Group	42–6036	Rear brake anchor strap (1954/5)	1
7	B32 B34	42–6036	Rear brake anchor strap (1956)	1
8	B Group	35–698	Rear brake anchor strap bolt split pin (1954/5)	1
8	B32 B34	35–698	Rear brake anchor strap bolt split pin (1956)	1
9	B Group	42–6037	Rear brake anchor strap bolt (1954/5)	1
9	B32 B34	42–6037	Rear brake anchor strap bolt (1954/6)	1
10	B Group	42–6034	Rear brake cam (1954/5)	1
10	B32 B34	42–6034	Rear brake cam (1956)	1

Plate 24

REAR HUB and WHEEL FITTINGS

B Group Swinging Arm Frame (1954/5)
B32 B34 Swinging Arm Frame (1956)

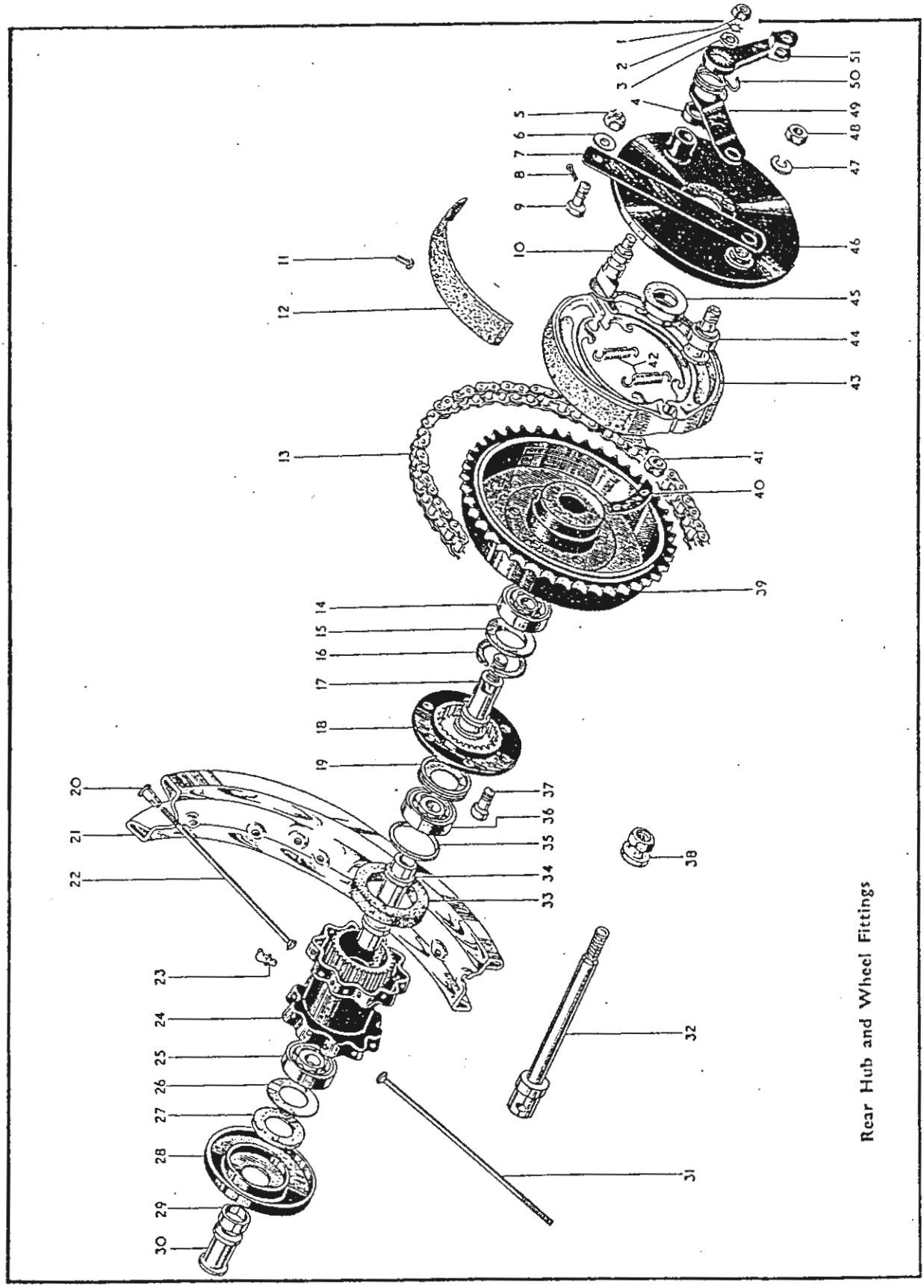

Rear Hub and Wheel Fittings

B Group Swinging Arm Frame (1954/5)
B32 B34 Swinging Arm Frame (1956)

Plate Ref. Number.	Models.	Part No.	Description.	Number per set.
11	B Group	35–6436	Brake shoe lining rivet (1954/5)	14
11	B32 B34	35–6436	Brake shoe lining rivet (1956)	14
12	B Group	65–5903	Brake shoe lining (1954/5)	2
12	B32 B34	65–5903	Brake shoe lining (1956)	2
13	B Group	66–9162	Transmission chain (rear) (1954/5)	1
13	B32 B34	66–9160	Transmission chain (rear) (1956)	1
14	B Group	65–5883	Rear hub ball bearing (1954/5)	1
14	B32 B34	65–5883	Rear hub ball bearing (1956)	1
15	B Group	67–6033	Rear hub ball journal shim (1954/5)	1
15	B32 B34	67–6033	Rear hub ball journal shim (1956)	1
16	B Group	67–6034	Rear hub retaining spring ring (1954/5)	1
16	B32 B34	67–6034	Rear hub retaining spring ring (1956)	1
17	B Group	67–6030	Rear brake drum bearing sleeve (1954/5)	1
17	B32 B34	67–6030	Rear brake drum bearing sleeve (1956)	1
18	B Group	67–6101	Driving flange (1954/5)	1
18	B32 B34	67–6101	Driving flange (1956)	1
19	B Group	65–5885	Hub ballrace retaining ring (1954/5)	1
19	B32 B34	65–5885	Hub ballrace retaining ring (1956)	1
20	B Group	27–6813	Spoke nipple (1954/5)	40
20	B32 B34	27–6813	Spoke nipple (1956)	40
21	B31 B33	67–6005	Rear wheel rim (WM2–19) (1954/5)	1
21	B32 B34	42–6002	Rear wheel rim (WM3–19) (1954/6)	1
22	B Group	67–6017	Rear wheel spoke (nearside) (1954/5)	20
22	B32 B34	67–6017	Rear wheel spoke (nearside) (1956)	20
23	B Group	15–5290	Rear huh grease nipple (1954/5)	1
23	B32 B34	15–5290	Rear hub grease nipple (1956)	1
24	B Group	67–6136	Rear hub shell complete with bearings (1954/5)	1
24	B32 B34	67–6136	Rear hub shell complete with bearings (1956)	1
25	B Group	65–5883	Rear hub ball bearing (1954/5)	1
25	B32 B34	65–5883	Rear hub ball bearing (1956)	1
26	B Group	65–5887	Felt washer retaining ring (1954/5)	1
26	B32 B34	65–5887	Felt washer retaining ring (1956)	1
27	B Group	65–5886	Rear hub washer (felt) (1954/5)	1
27	B32 B33	65–5886	Rear hub washer (felt) (1956)	1
28	B Group	67–6133	End cover (1954/5)	1
28	B32 B34	67–6133	End cover (1956)	1
29	B Group	65–5890	Hub spindle distance collar (1954/5)	1
29	B32 B34	65–5890	Hub spindle distance collar (1956)	1
30	B Group	67–6028	Hub spindle distance sleeve (1954/5)	1
30	B32 B34	67–6028	Hub spindle distance sleeve (1956)	1
31	B Group	67–6016	Rear wheel spoke (offside) (1954/5)	20
31	B32 B34	67–6016	Rear wheel spoke (offside) (1956)	20
32	B Group	67–6161	Rear hub spindle (1954/5)	1
32	B32 B34	67–6161	Rear hub spindle (1956)	1
33	B Group	67–6051	Hub shell washer (rubber) (1954/5)	1
33	B32 B34	67–6051	Hub shell washer (rubber) (1956)	1
34	B Group	67–6027	Hub spindle sleeve (1954/5)	1
34	B32 B34	67–6027	Hub spindle sleeve (1956)	1
35	B Group	65–5884	Hub bearing thrust washer (1954/5)	1
35	B32 B34	65–5884	Hub bearing thrust washer (1956)	1
36	B Group	65–5883	Rear hub ball bearing (1954/5)	1
36	B32 B34	65–5883	Rear hub hall bearing (1956)	1
37	B Group	67–6038	Brake drum securing bolt (1954/5)	6
37	B32 B34	67–6038	Brake drum securing bolt (1956)	6
38	B Group	67–6031	Rear hub spindle nut (1954/5)	1
38	B32 B34	67–6031	Rear hub spindle nut (1956)	1
39	B Group	42–6024	Rear brake drum and chainwheel (42T) (1954/5)	1
39	B32 B34	42–6024	Rear brake drum and chainwheel (42T) (1956)	1
40	B Group	67–6039	Brake drum bolt locking strip (1954/5)	3
40	B32 B34	67–6039	Brake drum bolt locking strip (1956)	3
41	B Group	2–452	Rear wheel securing bolt (1954/5)	6
41	B32 B34	2–452	Rear wheel securing bolt (1956)	6
42	B Group	65–5904	Rear brake shoe spring (1954/5)	2
42	B32 B34	65–5904	Rear brake shoe spring (1956)	2
43	B Group	65–5901	Rear brake shoe complete (1954/5)	2
43	B32 B34	65–5901	Rear brake shoe complete (1956)	2
44	B Group	42–6033	Rear brake fulcrum pin (1954/5)	1
44	B32 B34	42–6033	Rear brake fulcrum pin (1956)	1
45	B Group	67–6032	Rear hub collar (1954/5)	1

Plate 24—*continued* REAR HUB and WHEEL FITTINGS

B Group Swinging Arm Frame (1954/5)
B32 B34 Swinging Arm Frame (1956)

Plate Ref. Number.	Models.	Part No.	Description.	Number per set.
45	B32 B34	67-6032	Rear hub collar (1956)	1
46	B Group	42-6030	Rear brake cover plate with fixed fittings (1954/5)	1
46	B32 B34	42-6030	Rear brake cover plate with fixed fittings (1956)	1
47	B Group	65-5111	Rear brake fulcrum pin washer (spring) (1954/5)	1
47	B32 B34	65-5111	Rear brake fulcrum pin washer (spring) (1956)	1
48	B Group	2-124	Rear brake fulcrum pin nut (1954/5)	1
48	B32 B34	2-124	Rear brake fulcrum pin nut (1956)	1
—	B32 B34	30-729	Rear brake fulcrum pin washer (plain) (1956)	1
49	B Group	67-6046	Rear brake outrigger strap (1954/5)	1
49	B32 B34	67-6046	Rear brake outrigger strap (1956)	1
50	B Group	42-6046	Brake pedal return spring (1954/5)	1
50	B32 B34	42-6046	Brake pedal return spring (1956)	1
51	B Group	42-6045	Rear brake operating lever (1954/5)	1
51	B32 B34	42-6045	Rear brake operating lever (1956)	1

Plate 25 MUDGUARDS, CHAINGUARD, TOOLBOX and SILENCER

B31 B33 Spring Frame
B33 Rigid Frame

Plate Ref. Number.	Models.	Part No.	Description.	Number per set.
1	B31 B33 (spring)	2-1462	Rear chainguard bottom fixing bolt washer (spring)	1
2	B31 B33 (spring)	2-2395	Rear chainguard bottom fixing bolt nut	1
3	B31 B33 (spring)	15-7161	Rear chainguard bottom fixing bolt	1
4	B31 B33 (spring)	27-8560	Rear chainguard bottom fixing bolt washer (plain)	1
5	B31 B33 (spring)	2-2395	Rear chainguard chaincase fixing nut	1
6	B31 B33 (spring)	2-1462	Rear chainguard chaincase fixing nut washer (spring)	1
7	B31 B33 (spring)	2-525	Rear chainguard chaincase fixing nut washer (plain)	1
8	B31 B33 (spring)	65-7720	Rear chainguard complete	1
9	B31 B33 (spring)	1-5069	Rear chainguard rear fixing bolt	1
10	B31 B33 (spring)	2-923	Rear chainguard rear fixing bolt washer (plain)	1
11	B31 B33 (spring)	36-382	Rear chainguard rear fixing bolt washer (shakeproof)	1
12	B33 (rigid and spring)	67-6530	Front stand complete	1
13	B33 (rigid and spring)	67-6544	Front mudguard stay	1
14	B33 (rigid and spring)	67-6547	Front mudguard stay insulator (rubber)	2
15	B33 (rigid and spring)	67-6543	Front mudguard complete with fixed fittings	1
16	B33 (rigid and spring)	65-6623	Front mudguard support bridge	1
17	B33 (rigid and spring)	67-6546	Front mudguard support bridge insulator (rubber)	2
18	B31 B33 (spring)	65-110	Rear mudguard bottom fixing bolt	1
19	B31 B33 (spring)	66-8348	Rear mudguard bottom fixing bolt distance tube	1
20	B31 B33 (spring)	36-5344	Rear mudguard bottom fixing bolt washer (plain)	1
21	B31 B33 (spring)	2-204	Toolbox and mudguard fixing bolt	2
22	B31 B33 (spring)	27-8560	Toolbox and mudguard fixing bolt washer (plain)	2
23	B31 B33 (spring)	67-4030	Rear mudguard seatstay fixing bolt	2
24	B31 B33 (spring)	67-6761	Rear mudguard seatstay fixing bolt spacing washer	2
25	B31 B33 (spring)	2-522	Rear mudguard seatstay fixing bolt washer (spring)	2
26	B31 B33 (spring)	2-449	Rear mudguard seatstay fixing bolt nut	2
27	B31 B33 (spring)	2-49	Rear mudguard stay bolt nut	2
28	B31 B33 (spring)	36-382	Rear mudguard stay bolt washer (shakeproof)	2
29	B31 B33 (spring)	2-923	Rear mudguard stay bolt washer (plain)	2
30	B31 B33 (spring)	24-6770	Rear mudguard stay bolt	2
31	B31 B33 (spring)	67-6774	Rear mudguard stay complete (nearside)	1
32	B31 B33 (spring)	2-2395	Mudguard and toolbox fixing bolt nut	2
33	B31 B33 (spring)	2-1462	Mudguard and toolbox fixing bolt washer (spring)	2
34	B31 B33 (spring)	36-5344	Rear mudguard bottom fixing bolt washer (plain)	1
35	B31 B33 (spring)	2-49	Rear mudguard bottom fixing bolt nut	1
36	B31 B33 (spring)	36-382	Rear mudguard bottom fixing bolt washer (shakeproof)	1

Plate 25 MUDGUARDS, CHAINGUARD, TOOLBOX and SILENCER

B31 B33 Spring Frame
B33 Rigid Frame

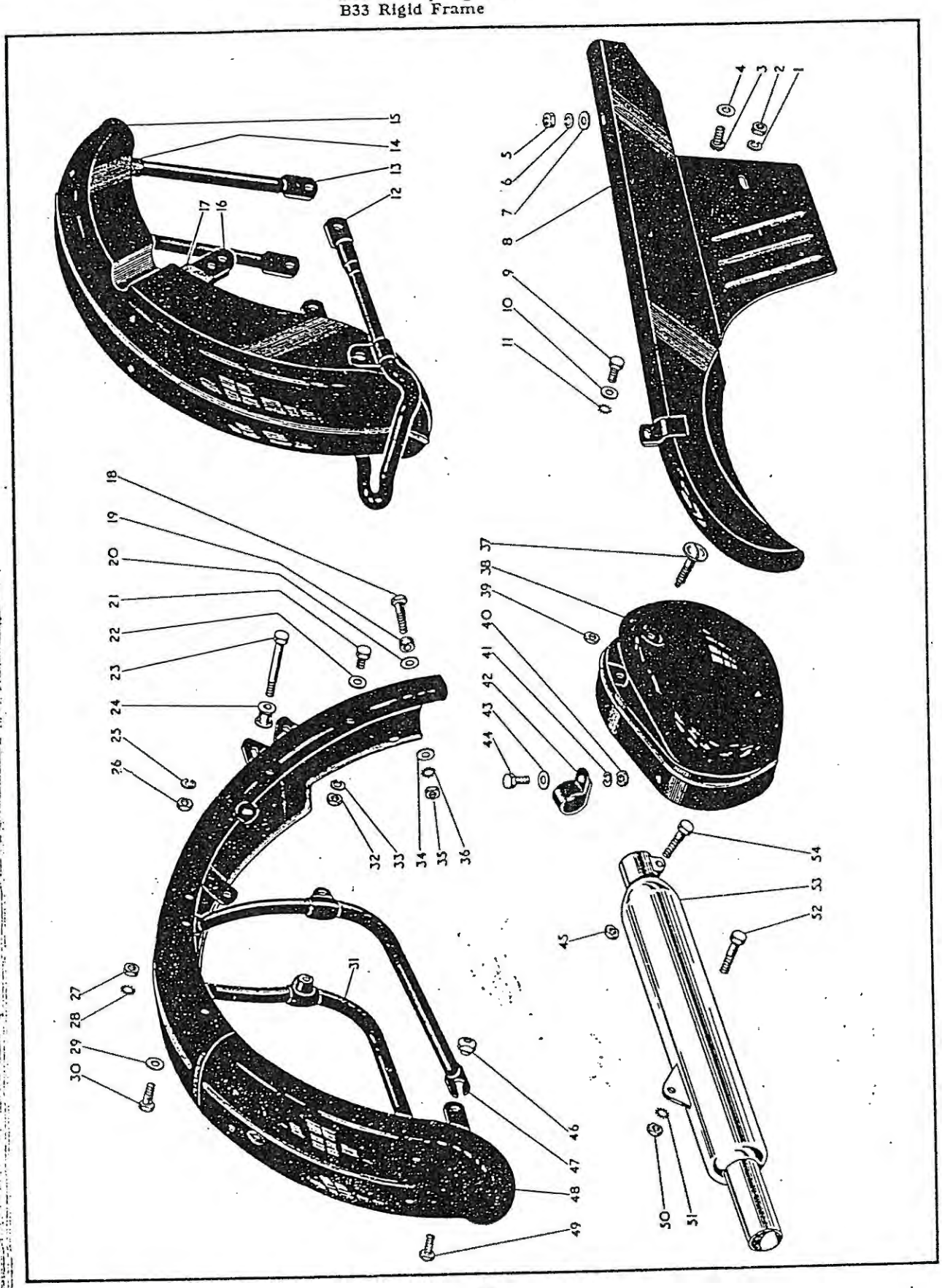

Plate 25—*continued* MUDGUARDS, CHAINGUARDS, TOOLBOX and SILENCER

B31 B33 Spring Frame
B33 Rigid Frame

Plate Ref. Number.	Models.	Part No.	Description.	Number per set.
37	B31 B33 (spring)	29–9132	Toolbox lid fixing screw complete	1
38	B31 B33 (spring)	67–9002	Toolbox complete	1
39	B31 B33 (spring)	2–1027	Toolbox lid fixing screw nut	1
40	B31 B33 (spring)	2–2395	Toolbox fixing clip bolt nut	1
41	B31 B33 (spring)	2–1462	Toolbox fixing clip bolt washer (spring)	1
42	B31 B33 (spring)	24–8928	Toolbox fixing clip	1
43	B31 B33 (spring)	27–8560	Toolbox fixing clip bolt washer (plain)	1
44	B31 B33 (spring)	2–204	Toolbox fixing clip bolt	1
45	B31 B33 (spring)	2–2395	Silencer inlet tube clip bolt nut	1
46	B31 B33 (spring)	15–447	Rear mudguard stay bottom bolt nut	2
47	B31 B33 (spring)	67–6772	Rear mudguard stay complete (offside)	1
48	B31 B33 (spring)	65–6740	Rear mudguard complete with fixed fittings	1
49	B31 B33 (spring)	2–1354	Rear mudguard stay bottom bolt	2
50	B31 B33 (spring)	2–49	Silencer fixing bolt nut	1
51	B31 B33 (spring)	36–382	Silencer fixing bolt washer (shakeproof)	1
52	B31 B33 (spring)	3–1399	Silencer fixing bolt	1
53	B31 B33 (spring)	65–2780	Silencer complete	1
54	B31 B33 (spring)	24–7343	Silencer inlet tube clip bolt	1

Plate 26 MUDGUARDS, CHAINGUARD, OIL TANK, TOOLBOX and SILENCER

B31 B33 Rigid and Spring Frame

Plate Ref. Number.	Models.	Part No.	Description.	Number per set.
1	B31 B33 (rigid)	65–2754	Silencer complete	1
2	B31 B33 (rigid)	2–2395	Silencer inlet tube clip bolt nut	1
3	B31 B33 (rigid)	24–7343	Silencer inlet tube clip bolt	1
4	B31 B33 (rigid)	15–7161	Toolbox strap bolt	2
5	B31 B33 (rigid)	29–541	Toolbox strap bolt washer (shakeproof)	2
6	B31 B33 (rigid)	65–9085	Toolbox fixing bracket	1
7	B31 B33 (rigid)	2–2395	Toolbox strap bolt nut	2
8	B31 B33 (rigid)	65–9080	Toolbox complete	1
9	B31 B33 (rigid and spring)	29–7962	Oil tank filter complete	1
10	B31 B33 (rigid)	65–7715	Rear chainguard complete	1
11	B31 B33 (rigid)	29–9132	Toolbox lid fixing screw complete	1
12	B31 B33 (rigid and spring)	29–7971	Oil feed pipe banjo union washer (fibre)	1
13	B31 B33 (rigid and spring)	66–8340	Oil tank breather pipe extension clip	1
14	B31 B33 (rigid and spring)	65–8499	Oil tank breather pipe extension	1
15	B31 B33 (rigid and spring)	65–8461	Oil feed pipe complete (tank)	1
16	B31 B33 (rigid and spring)	65–8422	Oil feed pipe connection ferrule	1
17	B31 B33 (rigid and spring)	65–2060	Oil feed pipe connection (rubber)	1
18	B31 B33 (rigid and spring)	65–8422	Oil feed pipe connection ferrule	1
19	B31 B33 (rigid and spring)	65–8465	Oil feed pipe complete (engine)	1
20	B31 B33 (rigid and spring)	66–8332	Oil feed pipe nipple nut	1
21	B31 B33 (rigid)	2–525	Rear chainguard fixing nut washer	1

MUDGUARDS, CHAINGUARD, OIL TANK, TOOLBOX and SILENCER

B31 B33 Rigid and Spring Frame

Plate Ref. Number.	Models.	Part No.	Description.	Number per set.
22	B31 B33 (rigid)	2-2395	Rear chainguard fixing nut	1
23	B31 B33 (rigid and spring)	65-S465	Oil return pipe complete (engine)	1
24	B31 B33 (rigid and spring)	66-S332	Oil return pipe nipple nut	1
25	B31 B33 (rigid and spring)	65-S422	Oil return pipe connection ferrule	1
26	B31 B33 (rigid and spring)	65-2060	Oil return pipe connection (rubber)	1
27	B31 B33 (rigid and spring)	65-S422	Oil return pipe connection ferrule	1
28	B31 B33 (rigid and spring)	65-S420	Oil return pipe connection	1
29	B31 (rigid and spring)	65-6603	Front stand complete	1
30	B31 B33 (rigid and spring)	15-447	Front stand mudguard fixing bolt nut	2
31	B31 B33 (rigid and spring)	2-1934	Front stand fork end fixing bolt	2
32	B31 (rigid and spring)	65-6607	Front mudguard stay	1
33	B31 B33 (rigid and spring)	15-7354	Front mudguard stay fork end fixing bolt	2
34	B31 (rigid and spring)	28-233S	Front mudguard support bridge bottom fixing bolt	4
34	B33 (rigid and spring)	28-233S	Front mudguard support bridge bottom fixing bolt	2
35	B31 B33 (rigid and spring)	2-1616	Front stand fork end fixing bolt nut	2
36	B31 B33 (rigid and spring)	24-S7S4	Front stand fork end fixing bolt washer (spring)	2
37	B31 B33 (rigid and spring)	24-S7S4	Front mudguard stay fork end fixing bolt washer (spring)	2
38	B31 B33 (rigid and spring)	2-1616	Front mudguard stay fork end fixing bolt nut	2
39	B31 B33 (rigid and spring)	2-2395	Front mudguard support bridge fixing screw nut	2
40	B31 B33 (rigid and spring)	2-1462	Front mudguard support bridge fixing screw washer (spring)	2
41	B31 B33 (rigid and spring)	66-751S	Front mudguard support bridge fixing screw washer (fibre)	2
42	B31 (rigid and spring)	65-6623	Front mudguard support bridge	1
43	B31 B33 (rigid and spring)	2-2395	Front mudguard stay fixing screw nut	2
44	B31 B33 (rigid and spring)	2-1462	Front mudguard stay fixing screw washer (spring)	2
45	B31 B33 (rigid and spring)	2-2395	Front number plate fixing stud nut	2
46	B31 B33 (rigid and spring)	2-1462	Front number plate fixing stud washer (spring)	2
47	B31 B33 (rigid and spring)	15-7161	Front mudguard stay fixing screw	2
48	B31 B33 (rigid and spring)	27-S560	Front mudguard stay fixing screw washer (plain)	2
49	B31 B33 (rigid and spring)	65-6576	Front number plate complete	1
50	B31 (rigid and spring)	65-6605	Front mudguard complete with fixed fittings	1
51	B31 B33 (rigid and spring)	15-7161	Front mudguard support bridge fixing screw	2
52	B31 B33 (rigid and spring)	27-S560	Front mudguard support bridge fixing screw washer (plain)	2
53	B31 B33 (rigid and spring)	36-3S2	Front mudguard support bridge bottom fixing bolt washer (shakeproof)	4
54	B31 B33 (rigid and spring)	2-49	Front mudguard support bridge bottom fixing bolt nut	4
55	B31 B33 (rigid and spring)	65-S500	Oil tank filler cap	1
56	B31 B33 (rigid and spring)	67-42	Oil tank filler cap washer (fibre)	1
57	B31 B33 (rigid and spring)	65-S479	Oil tank with fixed fittings	1
58	B31 B33 (rigid and spring)	2-1354	Front stand mudguard fixing bolt	2

Plate 26

MUDGUARDS, CHAINGUARD, OIL TANK, TOOLBOX and SILENCER

B31 B33 Rigid and Spring Frame

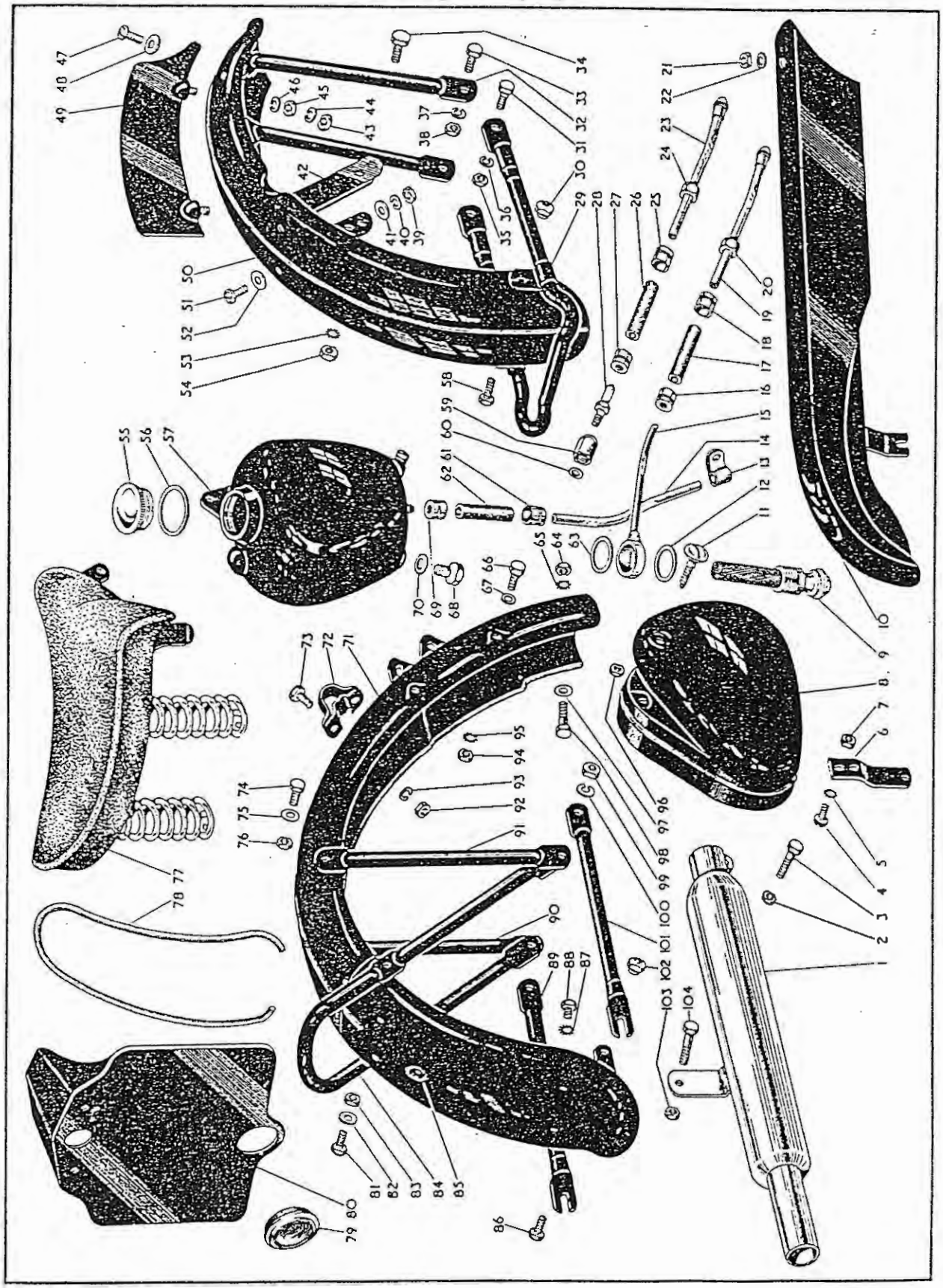

MUDGUARDS, CHAINGUARD, OIL TANK, TOOLBOX and SILENCER

B31 B33 Rigid and Spring Frame

Plate Ref. Number.	Models.	Part No.	Description.	Number per set.
59	B31 B33 (rigid and spring)	65–8424	Oil return pipe connection nut	1
60	B31 B33 (rigid and spring)	65–8421	Oil return pipe connection nut washer (fibre)	1
61	B31 B33 (rigid and spring)	65–8422	Oil tank breather pipe extension ferrule	1
62	B31 B33 (rigid and spring)	65–2060	Oil tank breather pipe extension connection (rubber)	1
63	B31 B33 (rigid and spring)	29–7971	Oil feed pipe banjo union washer (fibre)	1
64	B31 B33 (rigid)	2–49	Rear mudguard chainstay bridge bolt nut	1
65	B31 B33 (rigid)	36–382	Rear mudguard chainstay bridge bolt washer (shakeproof)	1
66	B31 B33 (rigid)	2–2273	Toolbox and mudguard fixing bolt	2
67	B31 B33 (rigid)	2–525	Toolbox and mudguard fixing bolt washer (plain)	2
68	B31 B33 (rigid and spring)	2–84	Oil tank drain plug	1
69	B31 B33 (rigid and spring)	65–8422	Oil tank breather pipe extension ferrule	1
70	B31 B33 (rigid and spring)	2–100	Oil tank drain plug washer (fibre)	1
71	B31 B33 (rigid)	65–6742	Rear mudguard complete with fixed fittings	1
72	B31 B33 (rigid)	*65–6770	Rear mudguard backstay bridge bracket	1
73	B31 B33 (rigid)	2–204	Rear mudguard backstay bridge bracket bolt	2
74	B31 B33 (rigid)	2–1354	Rear mudguard vertical stay fixing bolt	2
75	B31 B33 (rigid)	2–1374	Rear mudguard vertical stay fixing bolt washer (plain)	2
76	B31 B33 (rigid)	2–2395	Rear mudguard vertical stay fixing bolt nut	2
77	B31 B33 (rigid)	65–9100	Saddle	1
77	B31 B33 (spring)	66–9207	Saddle	1
78	B31 B33 (rigid and spring)	67–6851	Rear number plate rubber extrusion	1
79	B31 B33 (rigid and spring)	67–9067	Rear reflector (1954)	1
79	B31 B33 (rigid and spring)	67–9069	Rear reflector (1955)	1
—	B31 B33 (rigid and spring)	21–5102	Rear reflector nut (1955)	1
—	B31 B33 (rigid and spring)	29–541	Rear reflector washer (1955)	1
80	B31 B33 (rigid and spring)	67–6830	Rear number plate complete (with small hole for reflector)	1
81	B31 B33 (rigid)	2–1354	Lifting handle and rear mudguard stay fixing bolt	2
82	B31 B33 (rigid)	2–1374	Lifting handle and rear mudguard stay fixing bolt washer (plain)	2
83	B31 B33 (rigid)	2–2395	Lifting handle and rear mudguard stay fixing bolt nut	2
84	B31 B33 (rigid)	65–6839	Lifting handle and rear mudguard stay	1
85	B31 B33 (rigid and spring)	67–6839	Tail lamp wiring grommet	2
86	B31 B33 (rigid and spring)	2–204	Rear mudguard bottom stay bolt	2
87	B31 B33 (rigid and spring)	29–541	Rear number plate fixing bolt washer (shakeproof)	4
88	B31 B33 (rigid and spring)	2–220	Rear number plate fixing bolt	4
89	B31 B33 (rigid)	65–6842	Rear mudguard bottom stay (nearside)	1
90	B31 B33 (rigid)	65–6839	Rear mudguard vertical stay (nearside)	1
91	B31 B33 (rigid)	65–6837	Rear mudguard vertical stay (offside)	1
92	B31 B33 (rigid)	2–2395	Rear mudguard backstay bridge bracket bolt nut	2
93	B31 B33 (rigid)	2–1462	Rear mudguard backstay bridge bracket bolt washer (spring)	2
94	B31 B33 (rigid)	2–2395	Toolbox and mudguard fixing bolt nut	2
95	B31 B33 (rigid)	29–541	Toolbox and mudguard fixing bolt washer (shakeproof)	2
96	B31 B33 (rigid)	2–1027	Toolbox lid fixing screw nut	1
97	B31 B33 (rigid)	2–2899	Rear mudguard chainstay bridge bolt washer (plain)	1
98	B31 B33 (rigid)	27–6312	Rear mudguard chainstay bridge bolt	1
99	B31 B33 (rigid)	2–449	Rear mudguard stay fixing stud nut	2
100	B31 B33 (rigid)	2–2903	Rear mudguard stay fixing stud washer (spring)	2
101	B31 B33 (rigid)	65–6840	Rear mudguard bottom stay (offside)	1
102	B31 B33 (rigid)	15–447	Rear mudguard bottom stay bolt nut	2
103	B31 B33 (rigid)	2–449	Silencer fixing bolt nut	1
104	B31 B33 (rigid)	3–1399	Silencer fixing bolt	1

*Supplied as 65–6771 and 65–6772

MUDGUARDS, CHAINGUARD, OIL TANK, TOOLBOX and SILENCER

B32 B34 Rigid Frame (Competition)

Plate Ref. Number.	Models.	Part No.	Description.	Number per set.
1	B32 B34	42-7707	Rear chainguard complete	1
2	B32 B34	24-7178	Rear mudguard chainguard screw	2
3	B32 B34	27-8560	Rear mudguard chainguard screw washer (plain)	2
4	B32 B34	2-2395	Rear mudguard chainguard screw nut	2
5	B32 B34	29-541	Rear mudguard chainguard screw washer (shakeproof)	2
6	B32 B34	24-8784	Rear chainguard bolt washer (spring)	1
7	B32 B34	2-2899	Rear chainguard bolt washer (plain)	1
8	B32 B34	15-7354	Rear chainguard bolt	1
9	B32 B34	65-8465	Oil return pipe complete (engine)	1
10	B32 B34	66-8332	Oil return pipe nipple nut	1
11	B32 B34	65-8422	Oil return pipe connection ferrule	1
12	B32 B34	65-2060	Oil return pipe connection (rubber)	1
13	B32 B34	65-8422	Oil return pipe connection ferrule	1
14	B32 B34	65-8420	Oil return pipe connection	1
15	B32 B34	65-8424	Oil return pipe connection nut	1
16	B32 B34	65-8421	Oil return pipe connection nut washer (fibre)	1
17	B32 B34	2-2395	Front mudguard bottom stay fixing screw nut	2
18	B32 B34	2-1462	Front mudguard bottom stay fixing screw washer (spring)	2
19	B32 B34	65-6612	Front mudguard bottom stay	1
20	B32 B34	2-1616	Front mudguard stay fork end fixing bolt nut	4
21	B32 B34	24-8784	Front mudguard stay fork end fixing bolt washer (spring)	4
22	B32 B34	65-6612	Front mudguard top stay	1
23	B32 B34	2-923	Front mudguard stay fork end fixing bolt washer (plain)	4
24	B32 B34	15-7354	Front mudguard stay fork end fixing bolt	4
25	B32 B34	2-1462	Front mudguard centre stay fixing screw washer (spring)	2
26	B32 B34	2-2395	Front mudguard centre stay fixing screw nut	2
27	B32 B34	2-49	Front mudguard centre stay bolt nut	4
28	B32 B34	36-382	Front mudguard centre stay bolt washer (shakeproof)	4
29	B32 B34	15-480	Front mudguard centre stay bolt (offside)	2
30	B32 B34	42-6505	Front mudguard centre stay	1
31	B32 B34	2-1462	Front mudguard top stay fixing screw washer (spring)	2
32	B32 B34	2-2395	Front mudguard top stay fixing screw nut	2
33	B32 B34	15-7161	Front mudguard top stay fixing screw	2
34	B32 B34	27-8560	Front mudguard top stay fixing screw washer (plain)	2
35	B32 B34	42-6517	Front mudguard complete with fixed fittings	1
36	B32 B34	27-8560	Front mudguard centre stay fixing screw washer (plain)	2
37	B32 B34	15-7161	Front mudguard centre stay fixing screw	2
38	B32 B34	65-8500	Oil tank filler cap	1
39	B32 B34	67-42	Oil tank filler cap washer (fibre)	1
40	B32 B34	42-8356	Oil tank complete with fixed fittings	1
41	B32 B34	3-1156	Front mudguard centre stay bolt (nearside)	2
42	B32 B34	27-8560	Front mudguard bottom stay fixing screw washer (plain)	2
43	B32 B34	15-7161	Front mudguard bottom stay fixing screw	2
44	B32 B34	2-204	Rear mudguard bracket bolt	2
45	B32 B34	2-1462	Rear mudguard bracket bolt washer (spring)	2
46	B32 B34	42-8362	Oil tank fixing stud	4
47	B32 B34	2-2899	Oil tank fixing stud washer (plain)	4
48	B32 B34	42-8331	Oil tank fixing stud spacing tube	4
49	B32 B34	42-8341	Oil tank mounting pad (rubber)	4
50	B32 B34	42-8341	Oil tank mounting pad (rubber)	4
51	B32 B34	2-2899	Oil tank fixing stud washer (plain)	4
52	B32 B34	2-49	Oil tank fixing stud nut	4
53	B32 B34	2-1354	Rear mudguard clip bolt	2
54	B32 B34	2-525	Rear mudguard clip bolt washer	2
55	B32 B34	2-2276	Rear mudguard clip	1
56	B32 B34	42-6783	Rear mudguard support plate	1
57	B32 B34	27-8560	Rear mudguard stay fixing screw washer (plain)	4
58	B32 B34	15-7161	Rear mudguard stay fixing screw	4
59	B32 B34	65-6819	Rear number plate complete	1
60	B32 B34	15-7161	Rear number plate top fixing screw	2
61	B32 B34	27-8560	Rear number plate top fixing screw washer (plain)	2
62	B32 B34	2-1462	Rear mudguard stay fixing screw washer (spring)	4
63	B32 B34	2-2395	Rear mudguard stay fixing screw nut	4
64	B32 B34	27-8560	Rear number plate top fixing screw washer (plain)	2
65	B32 B34	2-1462	Rear number plate top fixing screw washer (spring)	2
66	B32 B34	2-2395	Rear number plate top fixing screw nut	2
66A	B32 B34	21-5102	Rear reflector nut	1
67	B32 B34	29-541	Rear reflector washer	1
67A	B32 B34	67-9069	Rear reflector	1

Plate 27

MUDGUARDS, CHAINGUARD, OIL TANK, TOOLBOX and SILENCER

B32 B34 Rigid Frame (Competition)

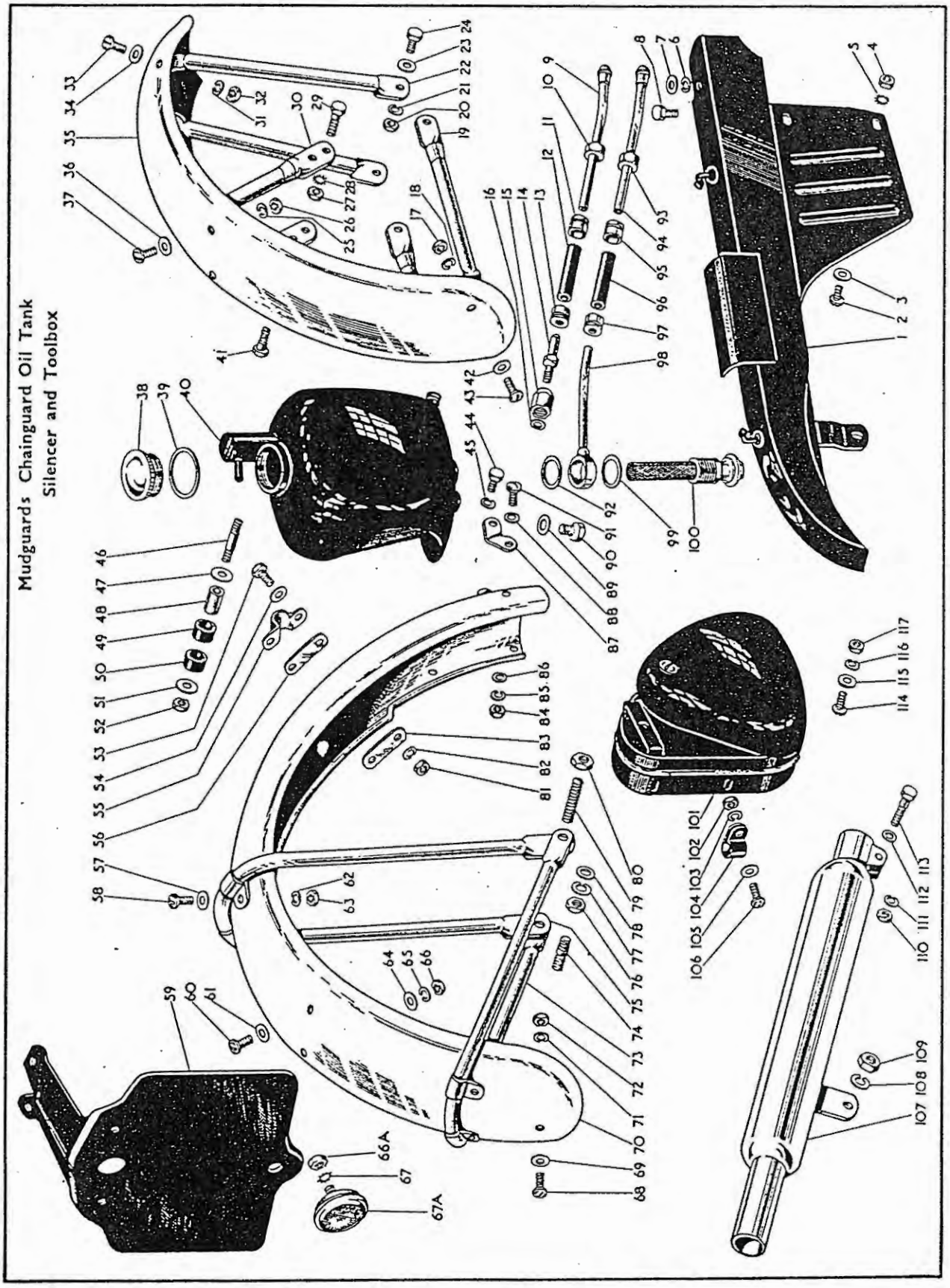

Plate 27—*continued* MUDGUARDS, CHAINGUARD, OIL TANK, TOOLBOX and SILENCER

B32 B34 Rigid Frame (Competition)

Plate Ref. Number.	Models.	Part No.	Description.	Number per set
67A	B32 B34	67–9067	Rear reflector (1954)	1
68	B32 B34	15–7161	Rear number plate bottom fixing screw	1
69	B32 B34	27–8560	Rear number plate bottom fixing screw washer (plain)	1
70	B32 B34	42–6806	Rear mudguard complete with fixed fittings	1
71	B32 B34	2–1462	Rear number plate bottom fixing screw washer (spring)	1
72	B32 B34	2–2395	Rear number plate bottom fixing screw nut	1
73	B32 B34	42–6809	Rear mudguard bottom stay complete	1
74	B32 B34	*65–4618	Rear mudguard stay stud (nearside)	1
75	B32 B34	42–6807	Rear mudguard top stay complete	1
76	B32 B34	2–46	Rear mudguard stay stud nut	2
77	B32 B34	2–522	Rear mudguard stay stud washer (spring)	2
78	B32 B34	2–2138	Rear mudguard stay stud washer (plain)	2
79	B32 B34	42–6813	Rear mudguard stay stud (offside)	1
80	B32 B34	2–452	Rear mudguard stay stud locknut (offside)	1
81	B32 B34	2–2395	Rear mudguard clip bolt nut	2
82	B32 B34	2–1462	Rear mudguard clip bolt washer (spring)	2
83	B32 B34	42–6783	Rear mudguard support plate	1
84	B32 B34	2–2395	Rear mudguard bracket fixing screw nut	2
85	B32 B34	2–1462	Rear mudguard bracket fixing screw washer (spring)	2
86	B32 B34	2–525	Rear mudguard bracket fixing screw washer (plain)	2
87	B32 B34	42–6811	Rear mudguard bracket	2
88	B32 B34	2–525	Rear mudguard bracket fixing screw washer (plain)	2
89	B32 B34	2–100	Oil tank drain plug washer (fibre)	1
90	B32 B34	2–84	Oil tank drain plug	1
91	B32 B34	15–7161	Rear mudguard bracket fixing screw	2
92	B32 B34	29–7971	Oil feed pipe banjo union washer (fibre)	1
93	B32 B34	66–8332	Oil feed pipe nipple nut	1
94	B32 B34	65–8465	Oil feed pipe complete (engine)	1
95	B32 B34	65–8422	Oil feed pipe connection ferrule	1
96	B32 B34	65–2060	Oil feed pipe connection (rubber)	1
97	B32 B34	65–8422	Oil feed pipe connection ferrule	1
98	B32 B34	42–8372	Oil tank feed pipe complete	1
99	B32 B34	29–7971	Oil feed pipe banjo union washer (fibre)	1
100	B32 B34	29–7962	Oil tank filter complete	1
101	B32 B34	42–9015	Toolbox complete with fixed fittings	1
102	B32 B34	2–2395	Toolbox fixing clip screw nut	2
103	B32 B34	2–1462	Toolbox fixing clip screw washer (spring)	2
104	B32 B34	42–9020	Toolbox fixing clip	2
105	B32 B34	27–8560	Toolbox fixing clip screw washer (plain)	2
106	B32 B34	2–204	Toolbox fixing clip screw	2
107	B32 B34	42–2751	Silencer complete	1
108	B32 B34	2–522	Silencer securing nut washer (spring)	1
109	B32 B34	2–46	Silencer securing nut	1
110	B32 B34	2–2395	Silencer inlet tube clip bolt nut	1
111	B32 B34	2–1462	Silencer inlet tube clip bolt washer (spring)	1
112	B32 B34	2–525	Silencer inlet tube clip bolt washer (plain)	1
113	B32 B34	24–7343	Silencer inlet tube clip bolt	1
114	B32 B34	2–204	Toolbox to bracket fixing screw	1
115	B32 B34	27–8560	Toolbox to bracket fixing screw washer (plain)	1
116	B32 B34	2–1462	Toolbox to bracket fixing screw washer (spring)	1
117	B32 B34	2–2395	Toolbox to bracket fixing screw nut	1

*Not supplied separately

Plate 28 MUDGUARDS, OIL TANK and REAR CHAINGUARD

B31 B33 Swinging Arm (1954/6)

Plate Ref. Number.	Models.	Part No.	Description.	Number per set.
1	B31 B33	42–7701	Rear chainguard complete (1954/5)	1
1	B31 B33	42–7730	Rear chainguard complete (1956)	1
2	B31 B33	65–292	Rear chainguard fixing bolt (1954/5)	1
2	B31 B33	24–7343	Rear chainguard fixing bolt (1956)	4

MUDGUARDS, OIL TANK and REAR CHAINGUARD

B31 B33 Swinging Arm (1954/6)

Plate Ref. Number.	Models.	Part No.	Description.	Number per set.
3	B31 B33	2–923	Rear chainguard fixing bolt washer (plain) (1954/5)	1
3	B31 B33	2–525	Rear chainguard fixing bolt washer (plain) (1956)	2
4	B31 B33	30–1194	Rear chainguard fixing bolt distance piece (1954/5)	1
5	B31 B33	2–49	Rear chainguard fixing bolt nut (1954/5)	1
6	B31 B33	24–8784	Rear chainguard fixing bolt washer (spring) (1954/5)	1
7	B31 B33	2–49	Rear chainguard long fixing bolt nut (1954/5)	1
8	B31 B33	24–8784	Rear chainguard long fixing bolt washer (spring) (1954/5)	1
9	B31 B33	2–353	Rear chainguard fixing bolt (short) (1954/5)	2
10	B31 B33	24–8784	Rear chainguard short fixing bolt washer (spring) (1954/5)	2
—	B31 B33	29–541	Rear chainguard securing bolt washer (shakeproof) (1956)	4
11	B31 B33	24–7178	Front mudguard stiffener fixing screw (1954/5)	2
12	B31 B33	2–2580	Front mudguard stiffener fixing screw washer (plain) (1954/5)	2
13	B31 B33	67–6560	Front mudguard stiffener (1954/5)	1
14	B31 B33	2–1462	Front mudguard stiffener fixing screw washer (spring) (1954/5)	2
15	B31 B33	2–2395	Front mudguard stiffener fixing screw nut (1954/5)	2
16	B31	67–6558	Front stand complete (1954/5)	1
16	B31 B33	67–6530	Front stand complete (1956)	1
17	B31 B33	2–1616	Front mudguard stay fork end fixing bolt nut (1954/5)	2
17	B31 B33	2–49	Front mudguard stay fork end fixing bolt nut (1956)	2
18	B31 B33	24–8784	Front mudguard stay fork end fixing bolt washer (spring) (1954/6)	2
19	B31	67–6557	Front mudguard stay (1954/5)	1
19	B31	67–6544	Front mudguard stay (1956)	1
—	B31 B33	2–923	Front mudguard stay spacing washer (offside bottom) (1956)	1
20	B31 B33	2–923	Front mudguard stay fork end fixing bolt washer (plain) (1954/5)	2
21	B31 B33	2–923	Front stand fork end fixing bolt washer (plain) (1954/5)	2
22	B31 B33	15–7354	Front mudguard stay fork end fixing bolt (1954/5)	2
22	B31 B33	24–6770	Front mudguard stay fork end fixing bolt (1956)	2
23	B31 B33	2–1934	Front stand fork end fixing bolt (1954/5)	2
23	B31 B33	3–1156	Front stand fork end fixing bolt (1956)	2
—	B31 B33	66–7518	Front mudguard support bridge washer (fibre) (1956)	2
24	B31 B33	32–194	Support bridge bottom fixing bolt (1954/5)	2
24	B31 B33	28–2338	Support bridge bottom fixing bolt (1956)	2
25	B31 B33	24–8784	Front stand fork end fixing bolt washer (spring) (1954/6)	2
26	B31 B33	2–1616	Front stand fork end fixing bolt nut (1954/5)	2
26	B31 B33	2–49	Front stand fork end fixing bolt nut (1956)	2
27	B31 B33	2–2580	Front stand release bolt washer (thin) (1954/5)	1
28	B31 B33	2–14	Front stand release bolt (1954/5)	1
29	B31 B33	2–1462	Front mudguard support bridge fixing screw washer (spring) (1954/6)	2
30	B31 B33	2–2395	Front mudguard support bridge fixing screw nut (1954/6)	2
31	B31 B33	2–49	Support bridge bottom fixing bolt nut (1954/6)	4
32	B31 B33	36–382	Support bridge bottom fixing bolt washer (shakeproof) (1954/6)	4
33	B31	67–6559	Front mudguard support bridge (1954/5)	1
33	B31	65–6623	Front mudguard support bridge (1956)	1
34	B31 B33	2–2395	Front mudguard stay fixing bolt nut (1954/6)	2
35	B31 B33	2–1462	Front mudguard stay fixing screw washer (spring) (1954/6)	2
36	B31 B33	2–2395	Front number plate fixing stud nut (1954/5)	2
37	B31 B33	2–1462	Front number plate fixing stud washer (spring) (1954/5)	2
38	B31 B33	27–8560	Front mudguard stay fixing screw washer (plain) (1954/6)	2
39	B31 B33	65–6576	Front number plate complete (1954/5)	1
40	B31 B33	15–7161	Front mudguard stay fixing screw (1954/5)	2
40	B31 B33	2–204	Front mudguard stay fixing screw (1956)	2
41	B31 B33	42–8342	Oil tank mounting strip (rubber) (1954/6)	4
42	B31 B33	65–8500	Oil tank filler cap (1954/6)	1
43	B31 B33	67–42	Oil tank filler cap washer (fibre) (1954/6)	1
44	B31 B33	42–8367	Oil tank with fixed fittings (1954/6)	1
—	B31 B33	42–8351	Oil tank fixing bracket (1956)	1
45	B31	67–6556	Front mudguard with fixed fittings (1954/5)	1
45	B31	67–6543	Front mudguard with fixed fittings (1956)	1
46	B31 B33	27–8560	Front mudguard support bridge fixing screw washer (plain) (1954/6)	2
47	B31 B33	15–7161	Front mudguard support bridge fixing screw (1954/5)	2
47	B31 B33	2–204	Front mudguard support bridge fixing screw (1956)	2
48	B31 B33	28–2338	Support bridge bottom fixing bolt (nearside) (1954/5)	2
49	B31 B33	42–8334	Oil tank filter assembly (1954/6)	1
50	B31 B33	42–8343	Oil tank filter plug washer (fibre) (1954/6)	1
51	B31 B33	15–7354	Rear mudguard frame fixing bolt (1954/5)	2
52	B31 B33	2–49	Rear mudguard bottom bracket fixing bolt nut (1954/5)	2

Plate 28 MUDGUARDS, OIL TANK and REAR CHAINGUARD

B31 B33 Swinging Arm Frame (1954/6)

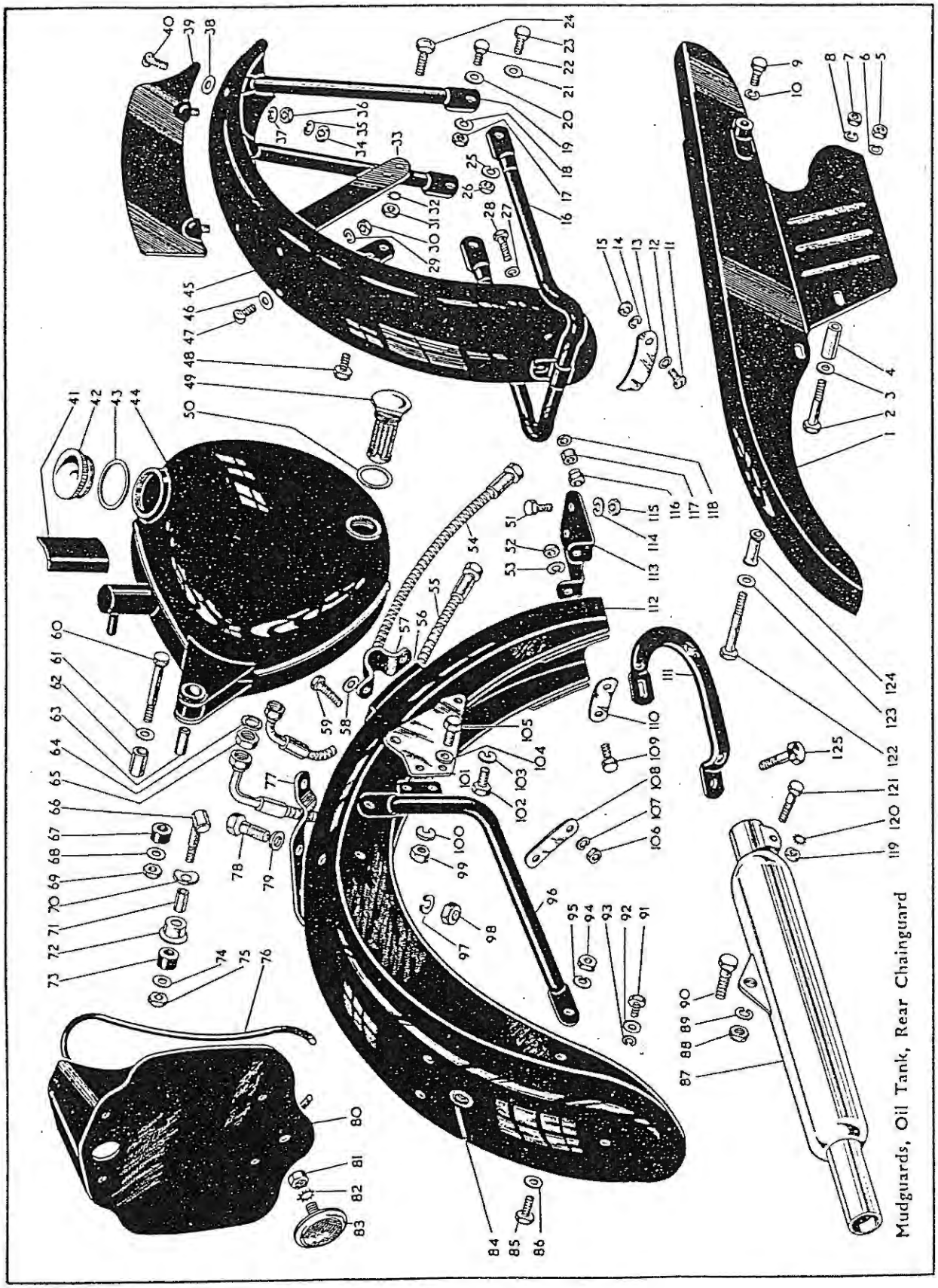

Mudguards Chainguard Handrail etc.
Petrol Tank Handlebar Rear Brake
Handlebar Petrol Tank Dual Seat etc.
Handlebar Petrol Tank Front Mudguard
Safety Bars Carrier Handrail
Legshields
Tools and Sundries
Electrical Equipment
Carrier and Panniers

MUDGUARDS, OIL TANK and REAR CHAINGUARD

B31 B33 Swinging Arm (1954/6)

Plate Ref. Number.	Models.	Part No.	Description.	Number per set.
53	B31 B33	24-8784	Rear mudguard bottom bracket fixing bolt washer (spring) (1954/6)	2
54	B31 B33	42-8344	Oil tank feed pipe (armoured) (1954/6)	1
55	B31 B33	42-8345	Oil tank return pipe (armoured) (1954/6)	1
56	B31 B33	42-6853	Rear mudguard distance piece (rubber) (1954/6)	2
57	B31 B33	42-6759	Rear mudguard fixing clip (large) (1954/6)	2
58	B31 B33	2-525	Rear mudguard fixing clip bolt washer (plain) (1954/6)	4
59	B31 B33	24-8328	Rear mudguard fixing clip bolt (1954/6)	4
60	B31 B33	29-5289	Oil tank top fixing bolt (1954/6)	1
61	B31 B33	2-537	Oil tank top fixing bolt washer (plain) (1954/6)	1
62	B31 B33	42-8339	Oil tank top fixing bolt distance tube (1954/6)	1
63	B31 B33	42-8331	Oil tank top fixing bolt spacing tube (1954/6)	1
64	B31 B33	15-203	Rocker feed pipe banjo washer (fibre) (1954/6)	1
65	B31 B33	42-8340	Rocker feed pipe banjo locknut (1954/6)	1
66	B31 B33	42-8326	Oil tank front fixing bolt (1954/5)	1
66	B31 B33	42-8385	Oil tank front fixing bolt (1956)	1
67	B31 B33	42-8341	Oil tank top fixing bolt mounting pad (rubber) (1954/6)	2
68	B31 B33	2-537	Oil tank top fixing bolt washer (plain) (1954/6)	1
69	B31 B33	2-49	Oil tank top fixing bolt nut (1954/6)	1
70	B31 B33	42-8329	Oil tank fixing bolt saddle washer (1954/6)	1
71	B31 B33	42-8331	Oil tank front fixing bolt spacing tube (1954/6)	1
72	B31 B33	42-8330	Oil tank front fixing bolt bracket cup (1954/6)	1
73	B31 B33	42-8341	Oil tank front fixing bolt mounting pad (rubber) (1954/6)	1
74	B31 B33	2-537	Oil tank front fixing bolt washer (plain) (1954/6)	1
75	B31 B33	2-49	Oil tank front fixing bolt nut (1954/6)	1
76	B31 B33	67-6851	Rear number plate rubber extrusion (1954/6)	1
77	B31 B33	42-6799	Dual seat support bridge (1954/6)	1
78	B31 B33	15-7354	Dual seat support bridge bolt	2
79	B31 B33	2-923	Dual seat support bridge bolt washer (plain) (1954/6)	2
80	B31 B33	67-6830	Rear number plate (1954/5)	1
80	B31 B33	67-6885	Rear number plate (1956)	1
81	B31 B33	21-5102	Rear number plate reflector nut	1
82	B31 B33	29-541	Rear number plate reflector washer (shakeproof) (1954/5)	1
83	B31 B33	67-9067	Rear reflector (1954)	1
83	B31 B33	67-9069	Rear reflector (1955)	1
84	B31 B33	67-6839	Rear mudguard tail lamp wiring grommet (1954/6)	2
85	B31 B33	28-2338	Rear mudguard stay bolt (1954/6)	2
86	B31 B33	2-923	Rear mudguard stay bolt washer (plain) (1954/6)	4
87	B31 B33	42-2725	Silencer complete (1954/5)	1
87	B31 B33	42-2888	Silencer complete (1956)	1
88	B31 B33	2-449	Silencer bracket fixing bolt nut (1954/6)	1
89	B31 B33	2-522	Silencer bracket fixing bolt washer (spring) (1954/6)	1
90	B31 B33	2-803	Silencer bracket fixing bolt (1954/6)	1
91	B31 B33	2-220	Rear number plate fixing bolt (1954/6)	4
92	B31 B33	27-8560	Rear number plate fixing bolt washer (plain) (1954/6)	4
93	B31 B33	2-1462	Rear number plate fixing bolt washer (spring) (1954/6)	4
94	B31 B33	2-49	Rear mudguard stay bolt nut (1954/6)	4
95	B31 B33	24-8784	Rear mudguard stay bolt washer (spring) (1954/6)	4
96	B31 B33	42-6860/7...	Rear mudguard stay complete (offside) (1955/6)	1
96	B31 B33	42-6858/7...	Rear mudguard stay complete (nearside) (1955/6)	1
96	B31 B33	42-6824/7...	Rear mudguard stay complete (offside) (1954)	1
96	B31 B33	42-6822	Rear mudguard stay complete (nearside) (1954)	1
97	B31 B33	24-8784	Dual seat support bridge washer (spring) (1954/6)	2
98	B31 B33	2-49	Dual seat support bridge bolt nut (1954/6)	2
99	B31 B33	2-2395	Rear mudguard stay bracket bolt nut (1954/6)	4
100	B31 B33	2-1462	Rear mudguard stay bracket bolt washer (spring) (1954/6)	4
101	B31 B33	42-6761	Rear mudguard stay bracket (offside) (1954/6)	1
101	B31 B33	42-6762	Rear mudguard stay bracket (nearside) (1954/6)	1
102	B31 B33	42-6782	Rear mudguard stay bracket bottom bolt (1954/6)	2
103	B31 B33	24-8784	Rear mudguard stay bracket bottom bolt washer (spring)	2
104	B31 B33	2-923	Rear mudguard stay bracket bolt washer (plain) (1954/6)	4
105	B31 B33	28-2338	Rear mudguard stay bracket bolt (1954/6)	4
106	B31 B33	2-2395	Rear mudguard fixing clip bolt nut (1954/6)	4
107	B31 B33	2-1462	Rear mudguard fixing clip bolt washer (spring) (1954/6)	4
108	B31 B33	42-6782	Rear mudguard fixing clip stiffening plate (1954/6)	2
109	B31 B33	24-7148	Rear mudguard bottom bracket fixing bolt (1954/5)	2
110	B31 B33	42-6783	Rear mudguard support plate (1954/5)	1
111	B31 B33	42-6865	Lifting handle (1954/6)	1
112	B31 B33	42-6856	Rear mudguard complete with fixed fittings (1954/6)	1

Plate 28—*continued*

MUDGUARDS, OIL TANK and REAR CHAINGUARD

B31 B33 Swinging Arm (1954/6)

Plate Ref. Number.	Models.	Part No.	Description.	Number per set.
112	B31 B33	42-6841	Rear mudguard with fixed fittings (1954)	1
113	B31 B33	42-6820	Rear mudguard bottom bracket (1954/5)	1
114	B31 B33	24-8784	Rear mudguard frame fixing bolt washer (spring) (1954/6)	1
115	B31 B33	2-49	Rear mudguard frame fixing bolt nut (1954/5)	2
116	B31	15-447	Front stand release bolt nut (1954/5)	1
117	B31	27-410	Front stand release bolt locknut (1954/5)	1
118	B31	2-6537	Front stand release bolt washer (thick) (1954/5)	1
119	B31 B33	2-2395	Silencer inlet tube clip bolt nut (1954/5)	1
120	B31 B33	29-541	Silencer inlet tube clip bolt washer (shakeproof) (1954/5)	1
121	B31 B33	24-7343	Silencer inlet tube clip bolt (1954/5)	1
122	B31 B33	33-4089	Rear chainguard fixing bolt (long) (1954/5)	1
123	B31 B33	2-923	Rear chainguard fixing bolt washer (plain) (1954/5)	1
124	B31 B33	42-7703	Rear chainguard fixing bolt distance tube (short) (1954/5)	1
125	B31 B33	27-6037	Rear mudguard stay and lifting handle bolt (1954/6)	2
—	B31 B33	15-7161	Rear mudguard bridge fixing bolt (top) (1956)	2
—	B31 B33	27-8560	Rear mudguard bridge fixing bolt washer (plain) (1956)	2
—	B31 B33	2-1462	Rear mudguard bridge fixing bolt washer (spring) (1956)	2
—	B31 B33	2-2395	Rear mudguard bridge fixing bolt nut (1956)	2
—	B31 B33	42-7710	Rear chaincase front section (1956)	1
—	B31 B33	2-1354	Rear chaincase fixing bolt (1956)	1
—	B31 B33	29-541	Rear chaincase fixing bolt washer (shakeproof) (1956)	1
—	B31 B33	42-7727	Rear chaincase and footrest rubber sleeve	1
—	B31 B33	42-7715	Rear chaincase top section (as required) (1956)	1
—	B31 B33	42-7719	Rear chaincase bottom section (as required) (1956)	1
—	B31 B33	42-7722	Rear chaincase rear section (as required) (1956)	1
—	B31 B33	24-7343	Rear chaincase securing bolt (top and bottom) (as rqd.) (1956)	4
—	B31 B33	2-204	Rear chaincase securing bolt (rear) (as required) (1956)	2
—	B31 B33	29-541	Rear chaincase securing bolt washer (shakeproof) (as required) (1956)	6
—	B31 B33	2-525	Rear chaincase securing bolt washer (rear) (plain) (as required) (1956)	2
—	B31 B33	42-8010	Chaincase rubber grommet (as required) (1956)	2
—	B31 B33	2-2899	Chaincase top and bottom plain washer (as required) (1956)	4

Plate 29

MUDGUARDS, CHAINGUARD, OIL TANK, SILENCER and HANDRAIL

B Group Swinging Arm Frame

Plate Ref. Number.	Models.	Part No.	Description.	Number per set.
1	B32 B34 (swinging arm)	42-7701/3	Rear chainguard complete	1
2	B32 B34 (swinging arm)	65-292	Rear chainguard fixing bolt	1
3	B32 B34 (swinging arm)	2-923	Rear chainguard fixing bolt washer (plain)	2
4	B32 B34 (swinging arm)	30-1194	Rear chainguard fixing bolt distance piece	1
5	B32 B34 (swinging arm)	24-8784	Rear chainguard fixing bolt washer (spring)	1
6	B32 B34 (swinging arm)	2-49	Rear chainguard fixing bolt nut	1
7	B32 B34 (swinging arm)	24-8784	Rear chainguard long fixing bolt washer (spring)	1
8	B32 B34 (swinging arm)	2-49	Rear chainguard long fixing bolt nut	1
9	B32 B34 (swinging arm)	2-353	Rear chainguard fixing bolt (short)	2
10	B32 B34 (swinging arm)	24-8784	Rear chainguard short fixing bolt washer (spring)	2
11	B32 B34 (swinging arm)	15-7161	Front mudguard stay fixing screw (1954/5)	4
11	B32 B34 (swinging arm)	2-204	Front mudguard fixing screw (1956)	4
12	B32 B34 (swinging arm)	27-8560	Front mudguard stay fixing screw washer (plain)	4
13	B32 B34 (swinging arm)	42-6503	Front mudguard with fixed fittings (1954/5)	1
13	B32 B34 (swinging arm)	42-6517	Front mudguard with fixed fittings (1956)	1
14	B32 B34 (swinging arm)	2-1462	Front mudguard stay fixing screw washer (spring)	4
15	B32 B34 (swinging arm)	2-2395	Front mudguard stay fixing screw nut	4

Plate 29

MUDGUARDS, CHAINGUARD, OIL TANK, SILENCER and HANDRAIL

B Group Swinging Arm Frame

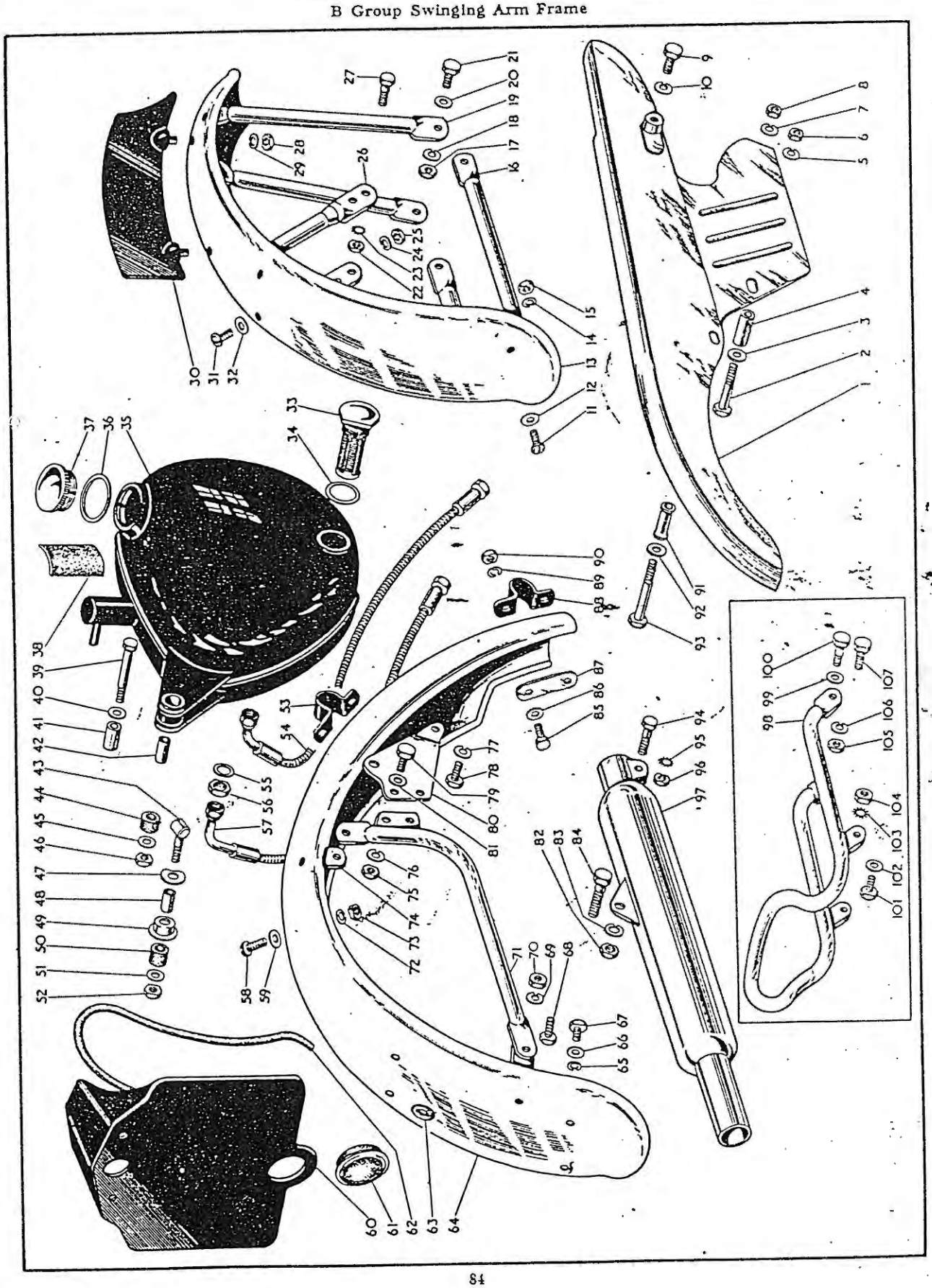

MUDGUARDS, CHAINGUARD, OIL TANK, SILENCER and HANDRAIL

B Group Swinging Arm Frame

Plate Ref. Number.	Models.	Part No.	Description.	Number per set.
16	B32 B34 (swinging arm)	65–6612	Front mudguard bottom stay	1
—	B32 B34 (swinging arm)	2–1934	Front mudguard stay bolt (offside) (1956)	1
—	B32 B34 (swinging arm)	2–370	Front mudguard stay distance piece (offside) (1956)	1
17	B32 B34 (swinging arm)	2–1616	Front mudguard stay fork end fixing bolt nut	4
18	B32 B34 (swinging arm)	24–8784	Front mudguard stay fork end fixing bolt washer (spring)	4
19	B32 B34 (swinging arm)	65–6612	Front mudguard top stay	1
20	B32 B34 (swinging arm)	2–923	Front mudguard stay fork end fixing bolt washer (plain)	4
21	B32 B34 (swinging arm)	15–7354	Front mudguard stay fork end fixing bolt (1954/5)	4
21	B32 B34 (swinging arm)	15–7354	Front and rear stay bolt (1956)	3
22	B32 B34 (swinging arm)	2–49	Front mudguard centre stay bolt nut	4
23	B32 B34 (swinging arm)	36–382	Front mudguard centre stay bolt washer (shakeproof)	4
24	B32 B34 (swinging arm)	2–1462	Front mudguard centre stay fixing screw washer (spring)	2
25	B32 B34 (swinging arm)	2–2395	Front mudguard centre stay fixing screw nut	2
26	B32 B34 (swinging arm)	42–6505	Front mudguard centre stay complete (1954/5)	1
26	B32 B34 (swinging arm)	42–6524	Front mudguard centre stay (1956)	1
27	B32 B34 (swinging arm)	3–1156	Front mudguard centre stay bolt (1954/5)	4
27	B32 B34 (swinging arm)	15–480	Front mudguard centre stay bolt (offside) (1956)	2
27	B32 B34 (swinging arm)	3–1156	Front mudguard centre stay bolt (nearside) (1956)	2
28	B32 B34 (swinging arm)	2–2395	Front number plate fixing stud nut (1954/5)	2
29	B32 B34 (swinging arm)	2–1462	Front number plate fixing stud washer (spring) (1954/5)	2
30	B32 B34 (swinging arm)	65–6576	Front number plate complete (1954/5)	1
31	B32 B34 (swinging arm)	15–7161	Front mudguard centre stay fixing screw (1954/5)	2
31	B32 B34 (swinging arm)	2–204	Front mudguard fixing screw (1956)	2
32	B32 B34 (swinging arm)	27–8560	Front mudguard centre stay fixing screw washer (plain)	2
33	B32 B34 (swinging arm)	42–8334	Oil tank filter assembly (1954/5)	1
33	B32 B34 (swinging arm)	29–7962	Oil tank filter assembly (1956)	1
34	B32 B34 (swinging arm)	42–8343	Oil tank filter plug washer (fibre) (1954/5)	1
—	B32 B34 (swinging arm)	42–8401	Oil tank strap (1956)	1
—	B32 B34 (swinging arm)	2–2395	Oil tank strap pin nut (1956)	1
—	B32 B34 (swinging arm)	27–8560	Oil tank strap pin nut washer (plain) (1956)	1
—	B32 B34 (swinging arm)	29–4664	Oil tank strap hinge pin (1956)	1
—	B32 B34 (swinging arm)	42–8410	Oil tank strap sponge rubber (1956)	1
—	B32 B34 (swinging arm)	42–8409	Oil tank base sponge rubber (1956)	1
35	B32 B34 (swinging arm)	42–8367	Oil tank with fixed fittings (1954/5)	1
35	B32 B34 (swinging arm)	42–8390	Oil tank with fixed fittings (1956)	1
36	B32 B34 (swinging arm)	67–42	Oil tank filler cap washer (fibre)	1
37	B32 B34 (swinging arm)	65–8500	Oil tank filler cap	1
38	B32 B34 (swinging arm)	42–8342	Oil tank mounting strip (rubber) (1954/5)	4
39	B32 B34 (swinging arm)	29–5289	Oil tank top fixing bolt (1954/5)	1
40	B32 B34 (swinging arm)	2–537	Oil tank top fixing bolt washer (plain) (1954/5)	1
41	B32 B34 (swinging arm)	42–8339	Oil tank top fixing bolt distance tube (1954/5)	1
42	B32 B34 (swinging arm)	42–8331	Oil tank top fixing bolt spacing tube (1954/5)	1
43	B32 B34 (swinging arm)	42–8326	Oil tank front fixing bolt complete (1954/5)	1
44	B32 B34 (swinging arm)	42–8341	Oil tank top fixing bolt mounting pad (rubber) (1954/5)	2
45	B32 B34 (swinging arm)	2–537	Oil tank top fixing bolt washer (plain) (1954/5)	1
46	B32 B34 (swinging arm)	2–49	Oil tank top fixing bolt nut (1954/5)	1
47	B32 B34 (swinging arm)	42–8329	Oil tank front fixing bolt saddle washer (1954/5)	1
48	B32 B34 (swinging arm)	42–8331	Oil tank front fixing bolt spacing tube (1954/5)	1
49	B32 B34 (swinging arm)	42–8330	Oil tank front fixing bolt bracket cup (1954/5)	1
50	B32 B34 (swinging arm)	42–8341	Oil tank front fixing bolt mounting pad (rubber) (1954/5)	1
51	B32 B34 (swinging arm)	2–537	Oil tank front fixing bolt washer (plain) (1954/5)	1
52	B32 B34 (swinging arm)	2–49	Oil tank front fixing bolt nut (1954/5)	1
53	B32 B34 (swinging arm)	42–6785	Rear mudguard fixing clip (small) (1954/5)	1
54	B32 B34 (swinging arm)	42–8344	Oil tank feed pipe (armoured) (1954/5)	1
54	B32 B34 (swinging arm)	42–8404	Oil feed pipe complete (1956)	1
—	B32 B34 (swinging arm)	29–7971	Oil feed pipe banjo washer (fibre) (1956)	1
55	B32 B34 (swinging arm)	15–203	Rocker feed pipe banjo washer (fibre)	2
56	B32 B34 (swinging arm)	42–8340	Rocker feed pipe banjo locknut	1
57	B32 B34 (swinging arm)	42–8345	Oil tank return pipe (armoured) (1954/5)	1
57	B32 B34 (swinging arm)	42–8408	Oil return pipe (1956)	1
—	B32 B34 (swinging arm)	2–84	Oil tank drain plug (1956)	1
—	B32 B34 (swinging arm)	2–100	Oil tank drain plug washer (fibre) (1956)	1
58	B32 B34 (swinging arm)	15–7161	Rear mudguard bridge fixing screw (when saddle is fitted) (1954/5)	4
59	B32 B34 (swinging arm)	27–8560	Rear mudguard bridge fixing screw washer (plain) (when saddle is fitted) (1954/5)	4
60	B32 B34 (swinging arm)	67–6830	Rear number plate complete (1954/5)	1
60	B32 B34 (swinging arm)	90–6854	Rear number plate complete (1956)	1
61	B32 B34 (swinging arm)	67–9067	Rear reflector	1

Plate 29—*continued.*

MUDGUARDS, CHAINGUARD, OIL TANK, SILENCER and HANDRAIL

B Group Swinging Arm Frame

Plate Ref. Number.	Models.	Part No.	Description.	Number per set.
61	B32 B34 (swinging arm)	67-9069	Rear reflector (1955)	1
—	B32 B34 (swinging arm)	21-5102	Rear reflector nut (1955)	1
—	B32 B34 (swinging arm)	29-541	Rear reflector nut washer (1955)	1
62	B32 B34 (swinging arm)	67-6S51	Rear number plate rubber extrusion (1954/5)	1
63	B32 B34 (swinging arm)	67-6839	Rear mudguard tail lamp wiring grommet	2
64	B32 B34 (swinging arm)	42-6S51	Rear mudguard complete with fixed fittings (1954/5)	1
64	B32 B34 (swinging arm)	42-6S71	Rear mudguard with fixed fittings (1956)	1
65	B32 B34 (swinging arm)	2-1462	Rear number plate fixing bolt washer (spring)	4
65	B32 B34 (swinging arm)	2-1462	Rear number plate fixing bolt washer (spring) (1956)	3
—	B32 B34 (swinging arm)	2-2395	Rear number plate fixing plate nut (1956)	3
66	B32 B34 (swinging arm)	27-S560	Rear number plate fixing bolt washer (plain) (1954/5)	4
66	B32 B34 (swinging arm)	2-525	Rear number plate fixing bolt washer (plain) (1956)	2
67	B32 B34 (swinging arm)	2-220	Rear number plate fixing bolt (1954/5)	4
67	B32 B34 (swinging arm)	2-204	Rear number plate fixing bolt (1956)	2
68	B32 B34 (swinging arm)	24-6770	Rear mudguard stay bolt (1954/5)	4
68	B32 B34 (swinging arm)	2-1354	Rear mudguard stay bolt (1956)	4
69	B32 B34 (swinging arm)	24-S784	Rear mudguard stay bolt washer (spring) (1954/5)	4
69	B32 B34 (swinging arm)	24-S784	Rear mudguard stay support bolt washer (spring) (1956)	2
70	B32 B34 (swinging arm)	2-49	Rear mudguard stay bolt nut (1954/5)	4
70	B32 B34 (swinging arm)	29-S814	Rear mudguard stay bolt nut (1956)	4
—	B32 B34 (swinging arm)	28-233S	Rear mudguard stay support bolt (1956)	2
—	B32 B34 (swinging arm)	27-S560	Rear mudguard stay bolt washer (1956)	8
71	B32 B34 (swinging arm)	42-6S46	Rear mudguard stay complete (offside) (1954/5)	1
71	B32 B34 (swinging arm)	42-6S48	Rear mudguard stay complete (nearside) (1954/5)	1
71	B32 B34 (swinging arm)	42-6S74	Rear mudguard stay (1956)	1
71	B32 B34 (swinging arm)	42-6S72	Rear mudguard stay complete (top) (1956)	1
72	B32 B34 (swinging arm)	2-1462	Rear mudguard bridge fixing screw washer (spring) (when saddle is fitted)	4
73	B32 B34 (swinging arm)	2-2395	Rear mudguard bridge fixing screw nut (when saddle is fitted)	4
74	B32 B34 (swinging arm)	42-6S32	Rear mudguard bridge	2
75	B32 B34 (swinging arm)	2-2395	Rear mudguard stay bracket bolt nut	4
76	B32 B34 (swinging arm)	2-1462	Rear mudguard stay bracket bolt washer (spring)	4
77	B32 B34 (swinging arm)	24-S784	Rear mudguard stay bracket bottom bolt washer (spring)	2
78	B32 B34 (swinging arm)	28-233S	Rear mudguard stay bracket bottom bolt	2
79	B32 B34 (swinging arm)	28-233S	Rear mudguard stay bracket bolt	4
80	B32 B34 (swinging arm)	42-6761	Rear mudguard stay bracket (offside)	1
80	B32 B34 (swinging arm)	42-6762	Rear mudguard stay bracket (nearside)	1
81	B32 B34 (swinging arm)	2-923	Rear mudguard stay bracket bolt washer (plain) (1954/5)	4
81	B32 B34 (swinging arm)	2-923	Rear mudguard stay support bolt washer (plain) (1956)	2
82	B32 B34 (swinging arm)	2-449	Silencer bracket fixing bolt nut (when pillion footrests not fitted)	1
83	B32 B34 (swinging arm)	2-522	Silencer bracket fixing bolt washer (spring) (when pillion footrests not fitted)	1
84	B32 B34 (swinging arm)	2-803	Silencer bracket fixing bolt (when pillion footrests not fitted)	1
85	B32 B34 (swinging arm)	2-204	Rear mudguard fixing clip bolt (1954/5)	4
85	B32 B34 (swinging arm)	2-1354	Rear mudguard clip screw (1956)	2
86	B32 B34 (swinging arm)	27-S560	Rear mudguard fixing clip bolt washer (plain) (1954/5)	4
86	B32 B34 (swinging arm)	2-525	Rear mudguard clip screw washer (plain) (1956)	2
87	B32 B34 (swinging arm)	42-67S2	Rear mudguard fixing clip stiffening plate	2
87	B32 B34 (swinging arm)	42-6S77	Rear mudguard stiffening plate (1956)	1
88	B32 B34 (swinging arm)	42-6759	Rear mudguard fixing clip (large)	1
89	B32 B34 (swinging arm)	2-1462	Rear mudguard fixing clip bolt washer (spring) (1954/5)	4
89	B32 B34 (swinging arm)	2-1462	Rear mudguard clip screw washer (spring) (1956)	2
90	B32 B34 (swinging arm)	2-2395	Rear mudguard fixing clip bolt nut	4
90	B32 B34 (swinging arm)	2-2395	Rear mudguard clip screw nut (1956)	2
91	B32 B34 (swinging arm)	42-7703	Rear chainguard fixing bolt distance tube (short)	1
92	B32 B34 (swinging arm)	2-923	Rear chainguard fixing bolt washer (plain)	1
93	B32 B34 (swinging arm)	33-40S9	Rear chainguard fixing bolt (long)	1
94	B32 B34 (swinging arm)	24-7343	Silencer inlet tube clip bolt	1
95	B32 B34 (swinging arm)	29-541	Silencer inlet tube clip bolt washer (shakeproof)	1
96	B32 B34 (swinging arm)	2-2395	Silencer inlet tube clip bolt nut	1
97	B32 (swinging arm)	42-27S2	Silencer complete (1954/5)	1
97	B34 (swinging arm)	42-2730	Silencer complete (1954/5)	1
—	B32 B34 (swinging arm)	42-291S	Silencer complete (1956)	1
—	B32 B34 (swinging arm)	2-525	Silencer clip bolt washer (plain) (1956)	1
—	B32 B34 (swinging arm)	2-1462	Silencer clip bolt washer (spring) (1956)	1
—	B32 B34 (swinging arm)	28-233S	Silencer fixing bolt (1956)	1
—	B32 B34 (swinging arm)	2-923	Silencer fixing bolt washer (plain) (1956)	1
—	B32 B34 (swinging arm)	24-S784	Silencer fixing bolt washer (spring) (1956)	1
98	B32 B34 (swinging arm)	42-9075	Dual seat bandrail complete (1954/5)	1

Plate 29—*continued* MUDGUARDS, CHAINGUARD, OIL TANK, SILENCER and HANDRAIL

B Group Swinging Arm Frame

Plate Ref. Number.	Models.	Part No.	Description.	Number per set.
99	B32 B34 (swinging arm)	2-923	Handrail stay bolt washer (plain) (1954/5)	2
100	B31 B33 (swinging arm)	27-6037	Handrail stay bolt (1954/5)	2
101	B32 B34 (swinging arm)	24-6770	Handrail mudguard bolt (1954/5)	2
102	B32 B34 (swinging arm)	2-923	Handrail mudguard bolt washer (plain) (1954/5)	2
103	B32 B34 (swinging arm)	36-382	Handrail mudguard bolt washer (shakeproof) (1954/5)	2
104	B32 B34 (swinging arm)	2-49	Handrail mudguard bolt nut (1954/5)	2
105	B32 B34 (swinging arm)	2-49	Handrail stay bolt nut (1954/5)	2
106	B32 B34 (swinging arm)	24-8784	Handrail stay bolt washer (spring) (1954/5)	2
107	B32 B34 (swinging arm)	28-2338	Handrail stay bolt (1954/5)	2

Plate 30 PETROL TANK, HANDLEBAR and REAR BRAKE CONTROL

B32 B34 Rigid Frame (Competition)

Plate Ref. Number.	Models.	Part No.	Description.	Number per set.
1	B32 B34	65-6274	Rear brake lever swivel pin	1
2	B32 B34	29-7368	Rear brake rod adjuster ferrule	1
3	B32 B34	15-1312	Rear brake rod spring	1
4	B32 B34	2-2395	Rear brake rod spring nut	1
5	B32 B34	67-1025	Petrol tank stiffening plate bolt	2
6	B32 B34	2-923	Petrol tank stiffening plate bolt washer (plain)	2
7	B32 B34	36-382	Petrol tank stiffening plate bolt washer (shakeproof)	2
8	B32 B34	42-8037	Petrol tank stiffening plate	1
9	B32 B34	24-8504	Petrol tank filter washer (fibre)	1
10	B32 B34	27-8443	Petrol tank filter complete	1
11	B32 B34	2-930	Petrol tap washer (fibre)	As required
12	B32 B34	65-8171	Petrol tap	1
13	B32 B34	65-8172	Flexible petrol pipe	1
14	B32 B34	42-8055	Petrol tank complete with filler cap (two gallons)	1
15	B32 B34	42-8010	Petrol tank rubber grommet	1
16	B32 B34	42-8011	Petrol tank front fixing bolt	1
17	B32 B34	42-8012	Petrol tank mounting rubber (top)	1
18	B32 B34	2-1945	Petrol tank front fixing bolt washer (plain)	1
19	B32 B34	65-8504	Twist grip rotor and rotor sleeve complete	1
20	B32 B34	65-8503	Twist grip rubber grip	1
21	B32 B34	24-9570	Twist grip friction spring screw	1
22	B32 B34	24-9571	Twist grip friction spring screw locknut	1
23	B32 B34	24-9569	Twist grip friction spring	1
24	B32 B34	24-9573	Twist grip body screw	2
25	B32 B34	65-8505	Twist grip body (top half)	1
26	B32 B34	65-8506	Twist grip body (bottom half)	1
27	B32 B34	24-9572	Twist grip cable stop	1
28	B32 B34	65-8501	Throttle twist grip complete (less cable and cover)	1
29	B32 B34	29-8810	Front brake control complete (less cable and cover)	1
30	B32 B34	65-4960	Handlebar complete (less controls)	1
31	B32 B34	65-8675	Front brake cable and cover complete	1
32	B32 B34	66-8896	Air control complete (less cable and cover)	1
33	B32 B34	65-8832	Throttle cable and cover complete	1
34	B32 B34	65-8836	Air control cable and cover complete	1
35	B32 B34	65-8714	Ignition control cable and cover complete	1
36	B32 B34	66-8810	Ignition control complete (less cable and cover)	1
37	B32 B34	65-8502	Dummy grip (left-hand bar)	1
38	B32 B34	29-8820	Clutch control complete (less cable and cover)	1
39	B32 B34	42-8610	Exhaust lifter control complete (less cable and cover)	1
40	B32 B34	42-8601	Exhaust lifter control cable and cover complete	1
41	B32 B34	65-8680	Clutch control cable and cover complete	1

Plate 30

PETROL TANK, HANDLEBAR and REAR BRAKE CONTROL

B32 B34 Rigid Frame (Competition)

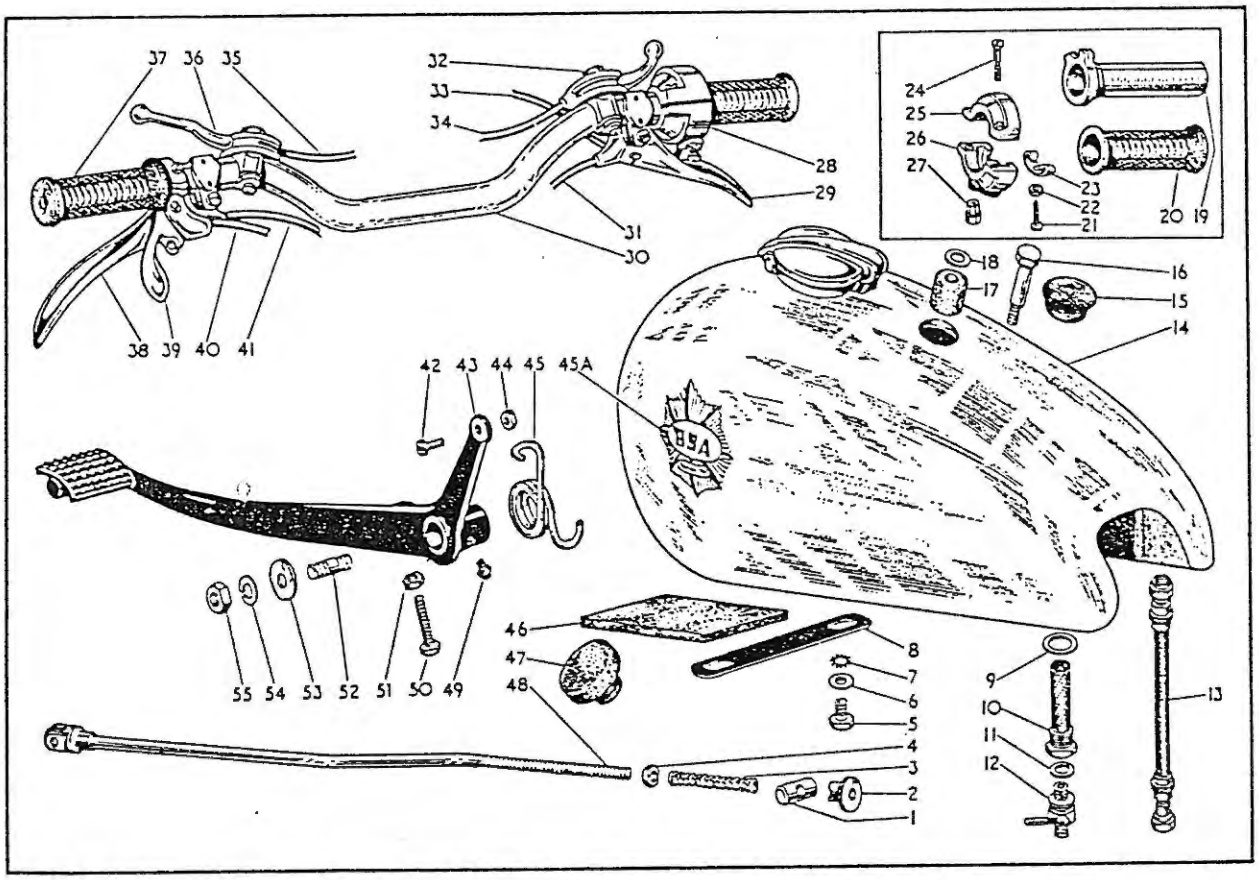

Plate Ref. Number.	Models.	Part No.	Description.	Number per set.
42	B32 B34	2-510	Rear brake rod toggle end screw	1
43	B32 B34	42-7022	Rear brake pedal complete	1
44	B32 B34	2-443	Rear brake rod toggle end screw nut	1
45	B32 B34	42-7021	Rear brake pedal return spring	1
45A	B32	65-S170	Petrol tank badge transfer (350c.c. Gold Star)	2
45A	B34	65-S175	Petrol tank badge transfer (500c.c. Gold Star)	2
46	B32 B34	42-S051	Petrol tank rubber (top tube)	2
47	B32 B34	42-S052	Petrol tank rubber (anti-roll)	2
48	B32 B34	42-7017	Rear brake rod complete	1
49	B32 B34	2S-2080	Rear brake pedal grease nipple	1
50	B32 B34	67-4S01	Rear brake pedal adjusting screw	1
51	B32 B34	2-2395	Rear brake pedal adjusting screw nut	1
52	B32 B34	67-4032	Rear brake pedal fulcrum stud	1
53	B32 B34	30-196	Rear brake pedal fulcrum stud washer (plain)	1
54	B32 B34	2-522	Rear brake pedal fulcrum stud washer (spring)	1
55	B32 B34	2-46	Rear brake pedal fulcrum stud nut	1

Plate 31

HANDLEBAR, PETROL TANK, DUAL SEAT, BATTERY CARRIER and BRAKE RODS

B31 B33 Rigid and Spring Frame

Plate Ref. Number.	Models.	Part No.	Description.	Number per set.
1	B31 B33 (rigid and spring)	29-7368	Rear brake rod adjuster ferrule	1
2	B31 B33 (rigid and spring)	65-6274	Rear brake lever swivel pin	1
3	B31 B33 (rigid and spring)	15-1312	Rear brake rod spring	1
4	B31 B33 (rigid and spring)	2-2395	Rear brake rod spring nut	1
5	B31 B33 (spring)	67-7031	Rear brake rod extension tube	1
6	B31 B33 (spring)	65-7071	Rear brake rod complete	1
7	B31 B33 (rigid and spring)	2-129	Dual seat fixing bolt	7
8	B31 B33 (rigid and spring)	2-923	Dual seat fixing bolt washer (plain)	7
9	B31 B33 (rigid and spring)	35-33	Dual seat fixing bolt washer (spring)	7
10	B31 B33 (rigid)	67-9094	Dual seat rear support bracket (offside)	1
10	B31 B33 (spring)	67-9093	Dual seat rear support bracket (offside)	1
11	B31 B33 (rigid and spring)	2-49	Dual seat to mudguard fixing bolt nut	2
12	B31 B33 (rigid and spring)	35-33	Dual seat to mudguard fixing bolt washer (spring)	2
13	B31 B33 (rigid)	67-9093	Dual seat rear support bracket (nearside)	1
13	B31 B33 (spring)	67-9094	Dual seat rear support bracket (nearside)	1
14	B31 B33 (rigid and spring)	2-923	Dual seat to mudguard fixing bolt washer (plain)	2
15	B31 B33 (rigid and spring)	27-6037	Dual seat to mudguard fixing bolt	2
16	B31 B33 (rigid and spring)	67-9095	Backstay and seat lug stud	1
17	B31 B33 (rigid and spring)	65-9236	Dual seat front support bracket	1
18	B31 B33 (rigid and spring)	15-431	Backstay and seat lug stud washer (plain)	2
19	B31 B33 (rigid and spring)	2-1925	Backstay and seat lug stud nut	2
20	B31 B33 (rigid and spring)	65-8038	Petrol tank rear support bolt wire	1
21	B31 B33 (rigid and spring)	66-8089	Petrol tank rear support bolt	2
22	B31 B33 (rigid and spring)	30-660	Petrol tank rear support bolt washer	2
23	B31 B33 (rigid and spring)	36-4140	Petrol tank rear support bolt rubber	2
24	B31 B33 (rigid and spring)	65-8032	Petrol tank rear support bolt rubber (top)	2
25	B31 B33 (rigid and spring)	65-8503	Twist grip rubber grip	1
26	B31 B33 (rigid and spring)	65-8504	Twist grip rotor and rotor sleeve complete	1
27	B31 B33 (rigid and spring)	24-9570	Friction spring screw	1
28	B31 B33 (rigid and spring)	24-9571	Friction spring screw locknut	1
29	B31 B33 (rigid and spring)	24-9569	Friction spring	1
30	B31 B33 (rigid and spring)	24-9573	Twist grip body screw	2
31	B31 B33 (rigid and spring)	65-8505	Twist grip body (top half)	1
32	B31 B33 (rigid and spring)	65-8506	Twist grip body (bottom half)	1
33	B31 B33 (rigid and spring)	24-9572	Twist grip cable stop	1
34	B31 B33 (rigid and spring)	65-8501	Throttle twist grip complete (less cable and cover)	1
35	B31 B33 (rigid and spring)	29-8810	Front brake control (less cable and cover)	1

Plate 31

HANDLEBAR, PETROL TANK, DUAL SEAT, BATTERY CARRIER and BRAKE RODS

B31 B33 Rigid and Spring Frame

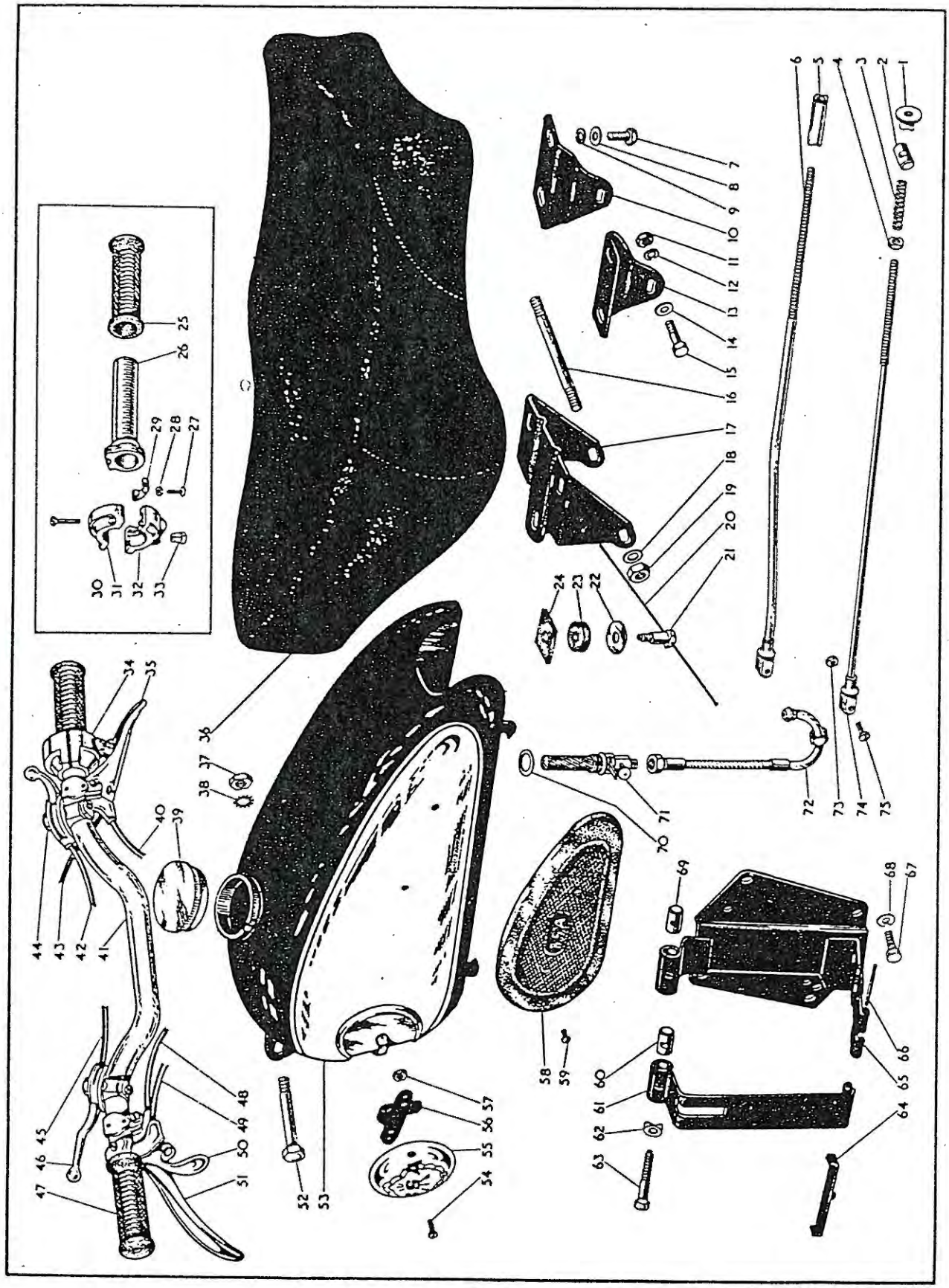

Plate 31—*continued* HANDLEBAR, PETROL TANK, DUAL SEAT, BATTERY CARRIER and BRAKE RODS

B31 B33 Rigid and Spring Frame

Plate Ref. Number.	Models.	Part No.	Description.	Number per set.
36	B 1 B33 (rigid and spring)	65–9254	Dual seat complete with fittings	1
37	B31 B33 (rigid and spring)	2–449	Petrol tank front fixing bolt nut	1
38	B31 B33 (rigid and spring)	66–4707	Petrol tank front fixing bolt washer (shakeproof)	1
39	B31 B33 (rigid and spring)	29–7898	Petrol tank filler cap	1
40	B31 B33 (rigid and spring)	65–8675	Front brake cable and cover complete	1
41	B31 B33 (rigid and spring)	65–4960	Handlebar complete (less controls)	1
42	B31 B33 (rigid and spring)	65–8836	Air control cable and cover complete	1
43	B31 B33 (rigid and spring)	65–8832	Throttle cable and cover complete	1
44	B31 B33 (rigid and spring)	66–8896	Air control complete (less cable and cover)	1
45	B31 B33 (rigid and spring)	65–8714	Ignition control cable and cover complete	1
46	B31 B33 (rigid and spring)	66–8810	Ignition control complete (less cable and cover)	1
47	B31 B33 (rigid and spring)	65–8502	Dummy grip (left-hand bar)	1
48	B31 B33 (rigid and spring)	65–8680	Clutch control cable and cover complete	1
49	B31 B33 (rigid and spring)	65–8795	Exhaust lifter control cable and cover complete	1
50	B31 B33 (rigid and spring)	66–8513	Exhaust lifter control complete (less cable and cover)	1
51	B31 B33 (rigid and spring)	29–8820	Clutch control complete (less cable and cover)	1
52	B31 B33 (rigid and spring)	65–8326	Petrol tank front fixing bolt	1
53	B31 B33 (rigid and spring)	65–8222	Petrol tank	1
54	B31 B33 (rigid and spring)	65–8317	Petrol tank badge clip screw	4
55	B31 B33 (rigid and spring)	65–8220	Petrol tank badge	2
56	B31 B33 (rigid and spring)	42–8020	Petrol tank badge clip	2
57	B31 B33 (rigid and spring)	42–8034	Petrol tank badge clip screw nut	4
58	B31 B33 (rigid and spring)	65–8206	Knee-grip rubber (left-hand)	1
58	B31 B33 (rigid and spring)	65–8205	Knee-grip rubber (right-hand)	1
59	B31 B33 (rigid and spring)	2–79	Knee-grip fixing screw	4
—	B31 B33 (rigid and spring)	65–4667	Battery carrier complete	1
60	B31 B33 (rigid and spring)	65–2352	Battery carrier swivel block (plain)	1
61	B31 B33 (rigid and spring)	29–4657	Battery carrier strap	1
62	B31 B33 (rigid and spring)	29–4662	Battery carrier strap bolt saddle washer	1
63	B31 B33 (rigid and spring)	29–4661	Battery carrier strap bolt	1
64	B31 B33 (rigid and spring)	29–4665	Battery locating strip complete	1
65	B31 B33 (rigid and spring)	65–4668	Battery carrier bracket complete	1
66	B31 B33 (rigid and spring)	29–4664	Battery carrier hinge pin	1
67	B31 B33 (rigid and spring)	2–1934	Battery carrier fixing bolt	5
68	B31 B33	24–8784	Battery carrier fixing bolt washer (spring)	5

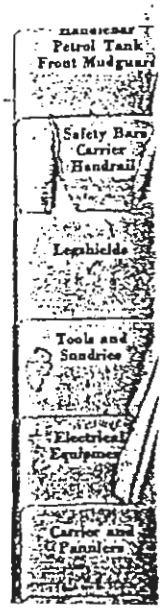

Plate 31—*continued* HANDLEBAR, PETROL TANK DUAL SEAT, BATTERY CARRIER and BRAKE RODS

B31 B33 Rigid and Spring Frame

Plate Ref. Number.	Models.	Part No.	Description.	Number per set.
69	B31 B33	65–2353	Battery carrier swivel block (tapped)	1
70	B31 B33	24–S504	Petrol tap washer (fibre) (.078")	as reqd.
70	B31 B33 (spring)	65–S218	Petrol tap washer ($\frac{1}{16}$") (1955)	as reqd.
70	B31 B33 (spring)	65–S219	Petrol tap washer ($\frac{3}{32}$") (1955)	as reqd.
71	B31 B33	65–S216	Petrol tap	1
72	B31 B33	65–S153	Flexible petrol pipe complete	1
73	B31 B33	2–443	Rear brake rod toggle end screw nut	1
74	B31 B33 (rigid)	29–7365	Rear brake rod complete	1
75	B31 B33	2–510	Rear brake rod toggle end screw	1

Plate 32 HANDLEBAR, PETROL TANK, FRONT MUDGUARD, TOOLBOX and DUAL SEAT

B Group Swinging Arm (1954/6)

Plate Ref. Number.	Models.	Part No.	Description.	Number per set.
1	B Group	29–736S	Rear brake rod adjuster ferrule (1954/5)	1
1	B32 B34	29–736S	Rear brake rod adjuster ferrule (1956)	1
2	B Group	65–6274	Rear brake lever swivel pin (1954/5)	1
2	B32 B34	65–6274	Rear brake lever swivel pin (1956)	1
3	B Group	15–1312	Rear brake rod spring (1954/5)	1
3	B32 B34	15–1312	Rear brake rod spring (1956)	1
4	B Group	2–2395	Rear brake rod spring nut (1954/5)	1
4	B32 B34	2–2395	Rear brake rod spring nut (1956)	1
5	B Group	42–7007	Rear brake rod complete (1954/5)	1
5	B32 B34	42–7007	Rear brake rod complete (1956)	1
6	B31 B33	42–903S	Toolbox complete with fixed fittings (1954/6)	1
7	B31 B33	65–292	Toolbox top fixing bolt (1954/5)	1
7	B31 B33	29–4329	Toolbox top fixing bolt (1956)	1
8	B31 B33	35–33	Toolbox front fixing bolt washer (spring) (1954/6)	2
9	B31 B33	42–4080	Toolbox fixing stud (1954/5)	1
9	B31 B33	65–536S	Toolbox fixing stud (1956)	1
10	B31 B33	2–49	Toolbox fixing stud nut (front) (1954/6)	2
11	B31 B33	24–S784	Toolbox top fixing bolt washer (spring) (1954/6)	1
12	B31 B33	42–S339	Toolbox top fixing distance tube (1954/6)	1
13	B31 B33	2–49	Toolbox top fixing bolt nut (1954/6)	1
14	B31 B33	27–5676	Toolbox top fixing washer (plain)	1
15	B31 B33	42–9061	Dual seat rear fixing bolt (1954/6)	2
16	B31 B33	2–923	Dual seat rear fixing bolt washer (plain) (1954/6)	2
17	B31 B33	35–33	Dual seat rear fixing bolt washer (spring) (1954/6)	2
18	B31 B33	42–6799	Dual seat rear support bracket (1954/6)	1
19	B31 B33	42–9072	Dual seat complete with brackets (1954/6)	1
20	B31 B33	2–49	Dual seat rear support bridge bolt nut (1954/6)	2
21	B31 B33	24–S784	Dual seat rear support bridge bolt washer (spring) (1954/6)	2
—	B31 B33	42–9073	Dual seat loose fittings (sets)	1
22	B31 B33	2–923	Dual seat rear support bridge bolt washer (plain) (1954/6)	2
23	B31 B33	15–7354	Dual seat rear support bridge bolt (1954/6)	2
24	B Group	65–S503	Twist grip rubber grip (1954/6)	1
25	B Group	65–S504	Twist grip rotor and sleeve complete (1954/6)	1
26	B Group	24–9570	Twist grip friction spring screw (1954/6)	1
27	B Group	24–9571	Twist grip friction spring screw locknut (1954/6)	1
28	B Group	24–9569	Twist grip friction spring (1954/6)	1
29	B Group	24–9573	Twist grip body screw (1954/6)	2
30	B Group	65–S505	Twist grip body (top half) (1954/6)	1
31	B Group	65–S506	Twist grip body (bottom half) (1954/6)	1
32	B Group	24–9572	Twist grip cable stop (1954/6)	1
33	B Group	65–S501	Twist grip complete (less cable and cover) (1954/6)	1
34	B Group	29–SS10	Front brake control complete (less cable and cover) (1954/5)	1

Plate 32 HANDLEBAR, PETROL TANK, FRONT MUDGUARD, TOOLBOX and DUAL SEAT

B Group Swinging Arm Frame (1954/6)

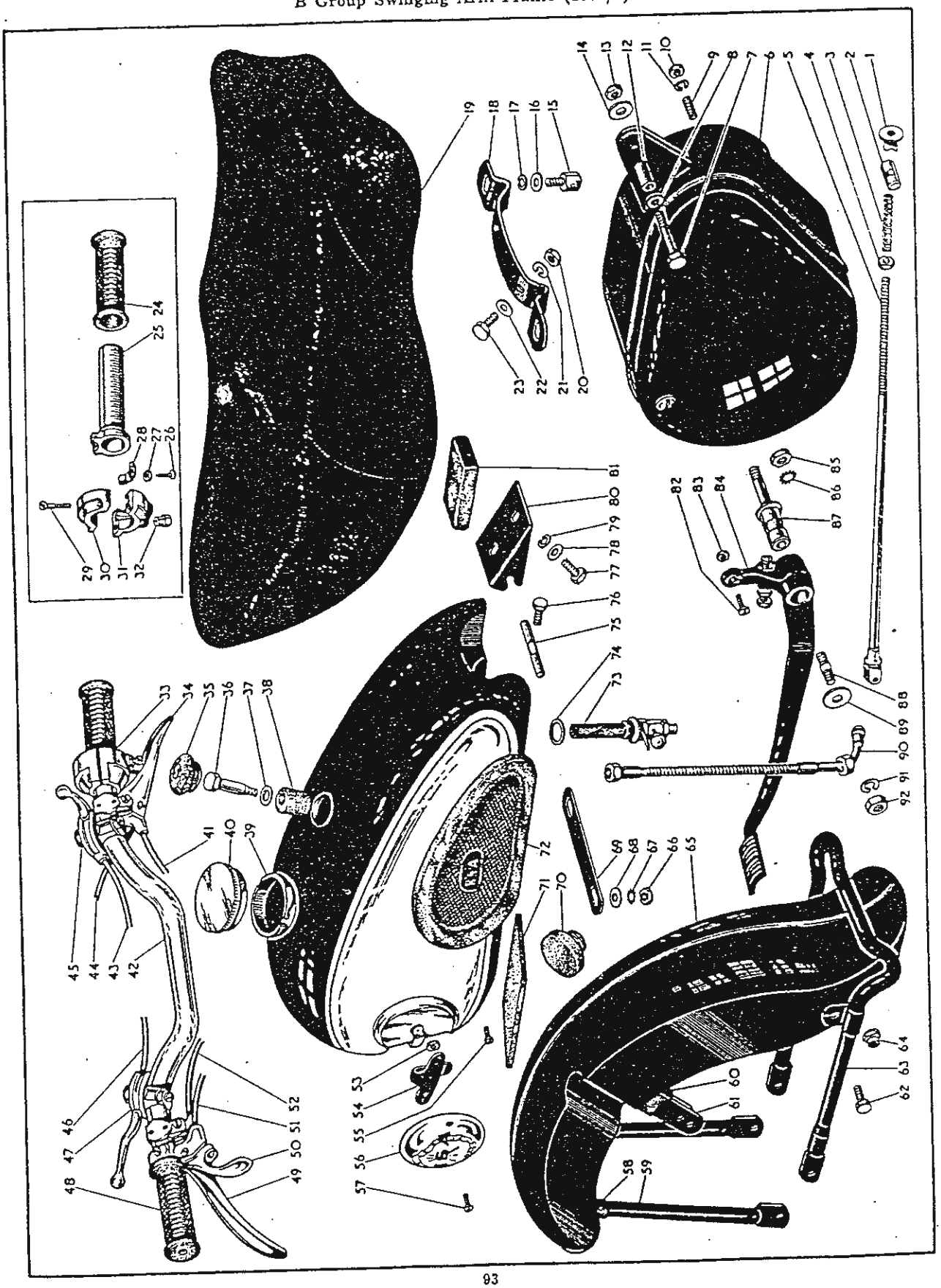

Plate 32—*continued.* HANDLEBAR, PETROL TANK, FRONT MUDGUARD, TOOLBOX and DUAL SEAT

B Group Swinging Arm Frame (1954/6)

Plate Ref. Number.	Models.	Part No.	Description.	Number per set.
—	B Group	42–8655	Combined front brake and air control complete (less cable and cover) (1956)	1
35	B Group	42–8010	Petrol tank rubber grommet (1954/6)	1
36	B Group	42–8011	Petrol tank fixing bolt (1954/6)	1
37	B Group	2–1945	Petrol tank fixing bolt washer (plain) (1954/6)	1
38	B Group	42–8012	Petrol tank mounting rubber (top)	1
39	B31 B33	42–8043/36	Petrol tank (two gallons) (1954/6)	1
39	B31 B33	42–8053/36	Petrol tank (four gallons) (1954/6)	1
39	B32 B34	42–8043/19	Petrol tank (two gallons (1954/5)	1
39	B32 B34	42–8055/19	Petrol tank (two gallons) complete with filler cap (1956)	1
40	B Group	29–7898	Petrol tank filler cap (1954/5)	1
40	B31 B33	29–7898	Petrol tank filler cap (1956)	1
41	B31 B32 B34	65–8675	Fron ke cable and cover complete (1954/5)	1
41	B33	67–8610	Front ke cable and cover complete (1954/5)	1
41	B Group	42–8670	Front e cable and cover complete (1956)	1
42	B Group	65–4960	Handle r (less controls) (1954/5)	1
42	B31 B33	65–4960	Handlebar (less controls) (1956)	1
42	B32 B34	42–4985	Handlebar (less controls) (1956)	1
43	B Group	65–8836	Air control cable and cover complete (1954/5)	1
43	B Group	42–8693	Air control cable and cover complete (1956)	1
44	B Group	65–8832	Throttle control cable and cover complete (1954/6)	1
45	B Group	66–8896	Air control complete (less cable and cover) (1954/5)	1
46	B Group	65–8714	Ignition control cable and cover complete (1954/6)	1
47	B Group	66–8810	Ignition control complete (less cable and cover) (1954/6)	1
48	B Group	65–8502	Dummy grip (left-hand bar) (1954/6)	1
49	B Group	29–8820	Clutch control complete (less cable and cover) (1954/6)	1
50	B Group	66–8513	Exhaust control complete (less cable and cover) (1954/6)	1
51	B Group	65–8795	Exhaust lifter cable and cover complete (1954/6)	1
52	B Group	65–8680	Clutch control cable and cover complete (1954/5)	1
52	B31 B33	65–8680	Clutch control cable and cover complete (1956)	1
52	B32 B34	42–8710	Clutch control cable and cover complete (1956)	1
53	B Group	42–8034	Petrol tank badge clip screw nut (1954/5)	4
53	B31 B33	42–8034	Petrol tank badge clip screw nut (1956)	4
54	B Group	42–8020	Petrol tank badge clip (1954/5)	2
54	B31 B33	42–8020	Petrol tank badge clip (1956)	2
55	B Group	2–79	Knee grip fixing screw (1954/5)	4
55	B31 B33	2–79	Knee grip fixing screw (1956)	4
56	B Group	65–8220	Petrol tank badge (1954/5)	2
56	B31 B33	65–8220	Petrol tank badge (1956)	2
57	B Group	65–8317	Petrol tank badge clip screw (1954/5)	4
57	B31 B33	65–8317	Petrol tank badge clip screw (1956)	4
58	B31 B33	67–6547	Front mudguard stay insulator (rubber) (1954/6)	2
59	B31 B33	67–6544	Front mudguard stay (1954/6)	1
60	B31 B33	67–6548	Front mudguard bridge stay insulator (rubber) (1954/6)	2
61	B31 B33	65–6623	Front mudguard support bridge (1956)	1
62	B31 B33	2–1354	Front stand mudguard fixing bolt (1954/6)	2
63	B31 B33	67–6530	Front stand (1954/6)	1
64	B31 B33	15–447	Front stand mudguard fixing bolt nut (1954/6)	2
65	B33	67–6543	Front mudguard complete with fixed fittings (1954/6)	1
66	B Group	2–49	Petrol tank stiffening plate stud nut (1954/5)	2
66	B31 B33	2–49	Petrol tank stiffening plate stud nut (1956)	2
67	B Group	36–382	Petrol tank stiffening plate stud washer (1954/5)	2
67	B31 B33	36–382	Petrol tank stiffening plate stud washer (1956)	2
67	B32 B34	36–382	Petrol tank stiffening plate bolt washer (1956)	2
68	B Group	2–923	Petrol tank stiffening plate stud washer (plain) (1954/5)	2
68	B31 B33	2–923	Petrol tank stiffening plate stud washer (plain) (1956)	2
68	B32 B34	2–923	Petrol tank stiffening plate bolt washer (plain) (1956)	2
69	B Group	42–8058	Petrol tank stiffening plate (1954/5)	1
69	B31 B33	42–8058	Petrol tank stiffening plate (1956)	1
69	B32 B34	42–8037	Petrol tank stiffening plate (1956)	1
—	B32 B34	67–1025	Petrol tank stiffening plate bolt (1956)	2
70	B Group	42–8052	Petrol tank mounting rubber (anti-roll) (1954/6)	2
71	B Group	42–8051	Petrol tank mounting rubber (top tube)	2
72	B Group	65–8206	Knee grip (nearside) (1954/5)	1
72	B Group	65–8205	Knee grip (offside) (1954/5)	1
72	B31 B33	65–8206	Knee grip (nearside) (1956)	1
72	B31 B33	65–8205	Knee grip (nearside) (1956)	1
73	B Group	65–8216	Petrol tap with filter (1954/5)	1

Plate 32—*continued* HANDLEBAR, PETROL TANK, FRONT MUDGUARD, TOOLBOX and DUAL SEAT

B Group Swinging Arm Frame (1954/6)

Plate Ref. Number.	Models.	Part No.	Description.	Number per set.
73	B31 B33	65–8216	Petrol tap with filter (1956)	1
73	B32 B34	65–8171	Petrol tap only (1956)	1
—	B32 B34	27–8443	Petrol tap filter only (1956)	1
74	B Group	24–8504	Petrol tap washer (fibre) (.078") (1954/6)	As required
74	B31 B33	24–8504	Petrol tap washer (fibre) (.078") (1956)	As required
74	B31 B33	65–8218	Petrol tap washer (fibre) (1/16") (1956)	As required
74	B31 B33	65–8219	Petrol tap washer (fibre) (3/32") (1956)	As required
74	B32 B34	2–930	Petrol tap washer (fibre) (1956)	As required
75	B Group	42–9060	Dual seat front support pin (1954/5)	1
75	B31 B33	42–9060	Dual seat front support pin (1956)	1
76	B Group	2–220	Dual seat front support pin securing bolt (1954/5)	1
76	B31 B33	15–645	Dual seat front support pin securing bolt (1956)	1
77	B Group	28–2338	Dual seat fixing bolt (1954/5)	2
77	B31 B33	28–2338	Dual seat fixing bolt (1956)	2
78	B Group	2–923	Dual seat front fixing bolt washer (plain)	2
78	B31 B33	2–923	Dual seat front fixing bolt washer (plain)	2
79	B Group	35–33	Dual seat front fixing bolt washer (spring) (1954/5)	2
79	B31 B33	35–33	Dual seat front fixing bolt washer (spring) (1956)	2
80	B Group	42–9058	Dual seat front support bracket (1954/5)	1
80	B31 B33	42–9058	Dual seat front support bracket (1956)	1
81	B Group	42–9057	Dual seat support rubber (1954/5)	2
81	B31 B33	42–9057	Dual seat support rubber (1956)	2
82	B Group	2–510	Rear brake rod toggle end screw (1954/6)	1
82	B31 B33	2–510	Rear brake rod toggle end screw (1956)	1
83	B Group	2–443	Rear brake rod toggle end screw nut (1954/5)	1
83	B31 B33	2–443	Rear brake rod toggle end screw nut (1956)	1
84	B Group	42–7003	Rear brake pedal (1954/5)	1
84	B32 B34	42–7003	Rear brake pedal (1956)	1
84	B31 B33	42–4347	Rear brake pedal (1956)	1
85	B Group	2–46	Rear brake pedal fulcrum pin nut (1954/5)	1
85	B32 B34	2–46	Rear brake pedal fulcrum pin nut (1956)	1
86	B Group	66–4707	Rear brake pedal fulcrum pin washer (shakeproof) (1954/5)	1
86	B32 B34	66–4707	Rear brake pedal fulcrum pin washer (shakeproof) (1956)	1
87	B Group	42–7012	Rear brake pedal fulcrum pin (1954/5)	1
87	B32 B34	42–7012	Rear brake pedal fulcrum pin (1956)	1
88	B Group	67–4032	Rear brake pedal fulcrum stud (1954/5)	1
88	B32 B34	67–4032	Rear brake pedal fulcrum stud (1956)	1
89	B Group	30–196	Rear brake pedal fulcrum stud washer (plain) (1954/5)	1
89	B32 B34	30–196	Rear brake pedal fulcrum stud washer (plain) (1956)	1
90	B Group	42–8060	Flexible petrol pipe complete (1954)	1
90	B Group	42–8076	Flexible petrol pipe complete (1955/6)	1
91	B Group	2–522	Rear brake pedal fulcrum stud washer (spring) (1954/5)	1
91	B32 B34	2–522	Rear brake pedal fulcrum stud washer (spring) (1956)	1
92	B Group	2–46	Rear brake pedal fulcrum stud nut (1954/5)	1
92	B32 B34	2–46	Rear brake pedal fulcrum stud nut (1956)	1
—	B31 B33	24–7343	Rear brake pedal bolt (1956)	1
—	B31 B33	24–978	Rear brake pedal bolt washer (spring)	1
—	B31 B33	42–4349	Rear brake cross shaft	1
—	B31 B33	42–4350	Rear brake cross shaft lever	1
—	B31 B33	42–7031	Rear brake cross shaft lever bolt	1
—	B31 B33	24–978	Rear brake cross shaft lever bolt washer (spring)	1
—	B31 B33	42–7030	Rear brake cable and cover complete	1
—	B31 B33	42–4355	Rear brake pedal return spring	1

Plate 33

SAFETY BARS, CARRIER, HANDRAIL

B31 B33 Swinging Arm Frame

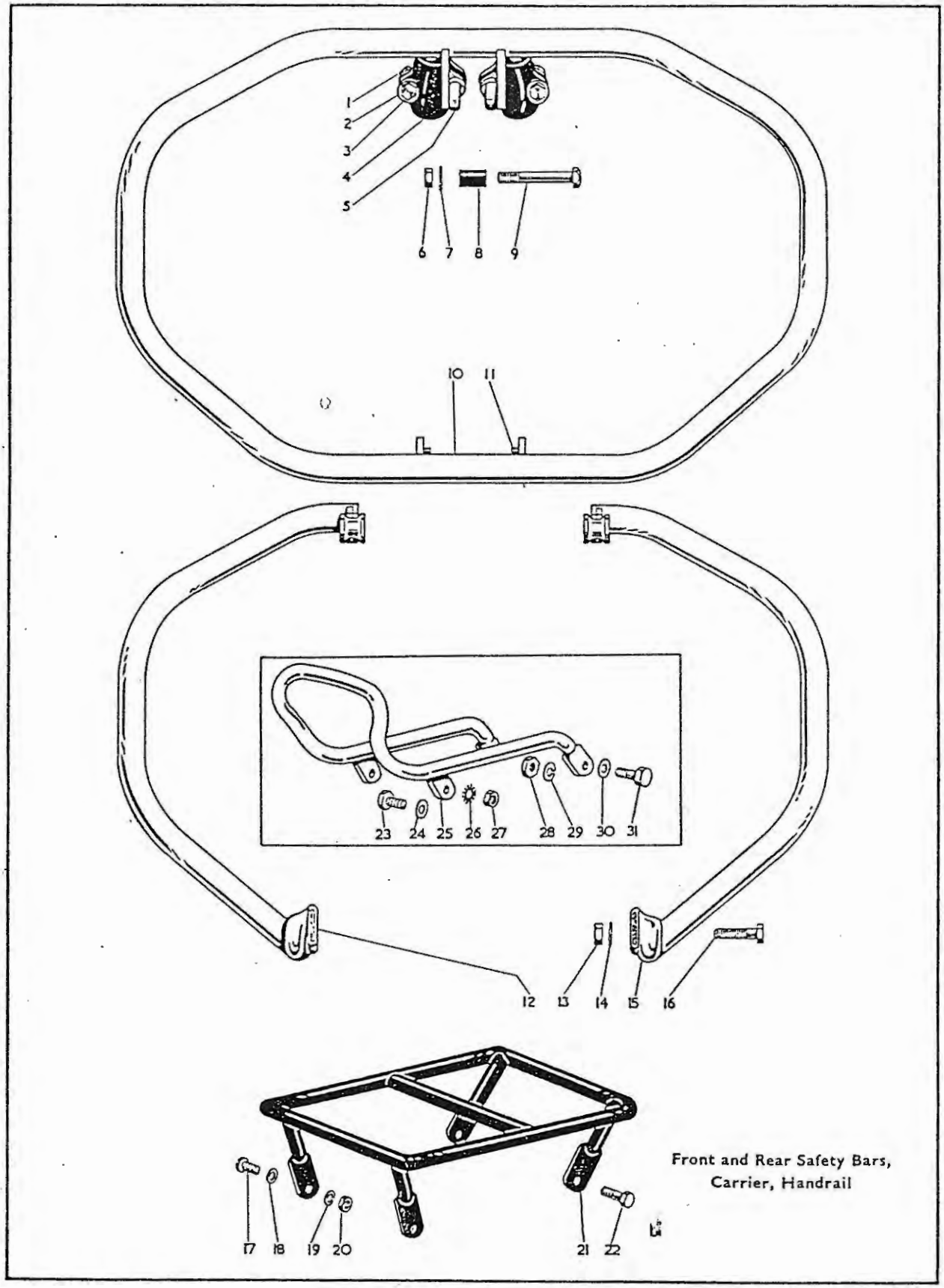

Front and Rear Safety Bars, Carrier, Handrail

Plate 33 SAFETY BARS, CARRIER and HANDRAIL

B31 B33 Swinging Arm Frame

Plate Ref. Number.	Models.	Part No.	Description.	Number per set.
—	B31 B33	42–4899	Front safety bar assembled complete with fittings	1
1	B31 B33	2–46	Front safety bar split clamp bolt nut	2
2	B31 B33	2–2903	Front safety bar split clamp bolt washer	2
3	B31 B33	2–803	Front safety bar split clamp bolt	2
4	B31 B33	42–4906	Front safety bar split clamp	2
5	B31 B33	42–4904	Front safety bar eye bolt	2
—	B31 B33	2–522	Front safety bar eye bolt washer (spring)	2
—	B31 B33	2–46	Front safety bar eye bolt nut	2
6	B31 B33	2–46	Front safety bar fixing bolt nut (top)	1
7	B31 B33	2–522	Front safety bar fixing bolt washer (spring) (top)	1
8	B31 B33	42–4905	Front safety bar eye bolt spacing tube	1
9	B31 B33	65–4185	Front safety bar fixing bolt (top)	1
10	B31 B33	42–4900	Front safety bar complete	1
11	B31 B33	42–4907	Front safety bar engine plate distance collar	2
12	B31 B33	42–4910	Rear safety bar complete (offside)	1
13	B31 B33	2–449	Rear safety bar fixing bolt nut (nearside) (bottom) (when pillion footrests not fitted)	1
14	B31 B33	2–522	Rear safety bar fixing bolt spring washer (nearside) (bottom) (when pillion footrests not fitted)	1
15	B31 B33	42–4914	Rear safety bar complete (nearside)	1
16	B31 B33	2–803	Rear safety bar fixing bolt (nearside) (bottom) (when pillion footrests not fitted)	1
—	B31 B33	65–4894	Pillion footrest anchor bolt (when safety bars are fitted)	2
—	B31 B33	29–7565	Pillion footrest anchor bolt distance piece (required only when safety bars, pillion footrests and enclosed chaincase are fitted)	1
17	B31 B33	15–7161	Carrier fixing screw (rear)	2
18	B31 B33	2–525	Carrier fixing screw washer (plain) (rear)	2
19	B31 B33	2–1462	Carrier fixing screw washer (spring) (rear)	2
20	B31 B33	2–2395	Carrier fixing screw nut (rear)	2
21	B31 B33	42–6920	Carrier complete	1
22	B31 B33	27–6037	Carrier fixing screw (front)	2
23	B31 B33	24–6770	Handrail mudguard bolt	2
24	B31 B33	2–923	Handrail mudguard bolt washer (plain)	2
25	B31 B33	42–9075	Dual seat handrail complete	1
26	B31 B33	36–382	Handrail mudguard bolt washer (shakeproof)	2
27	B31 B33	2–49	Handrail mudguard bolt nut	2
28	B31 B33	2–49	Handrail mudguard stay bolt nut	2
29	B31 B33	24–8784	Handrail mudguard stay bolt washer (spring)	2
30	B31 B33	2–923	Handrail mudguard stay bolt washer	2
31	B31 B33	27–6037	Handrail mudguard stay bolt	2

Plate 34 FRONT SAFETY BARS

B31 B33 Rigid and Spring Frame

Plate Ref. Number.	Models.	Part No.	Description.	Number per set.
1	B31 B33	2–49	Front safety bar "U" bolt nut	2
2	B31 B33	36–382	Front safety bar "U" bolt washer (shakeproof)	2
3	B31 B33	65–4798	Front safety bar "U" bolt saddle washer	2
4	B31 B33	65–4795	Front safety bar complete	1
5	B31 B33	65–4797	Front safety bar "U" bolt	1
6	B31 B33	2–861	Front safety bar stud washer (plain)	2
7	B31 B33	66–4163	Down tube, exhaust pipe, and safety bar stud	1

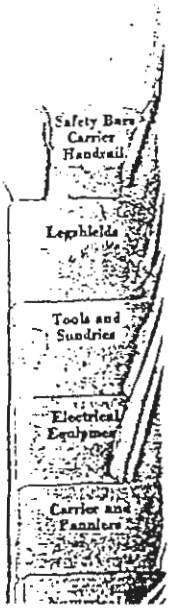

Plate 34 FRONT SAFETY BARS

B31 B33 Rigid and Spring Frame

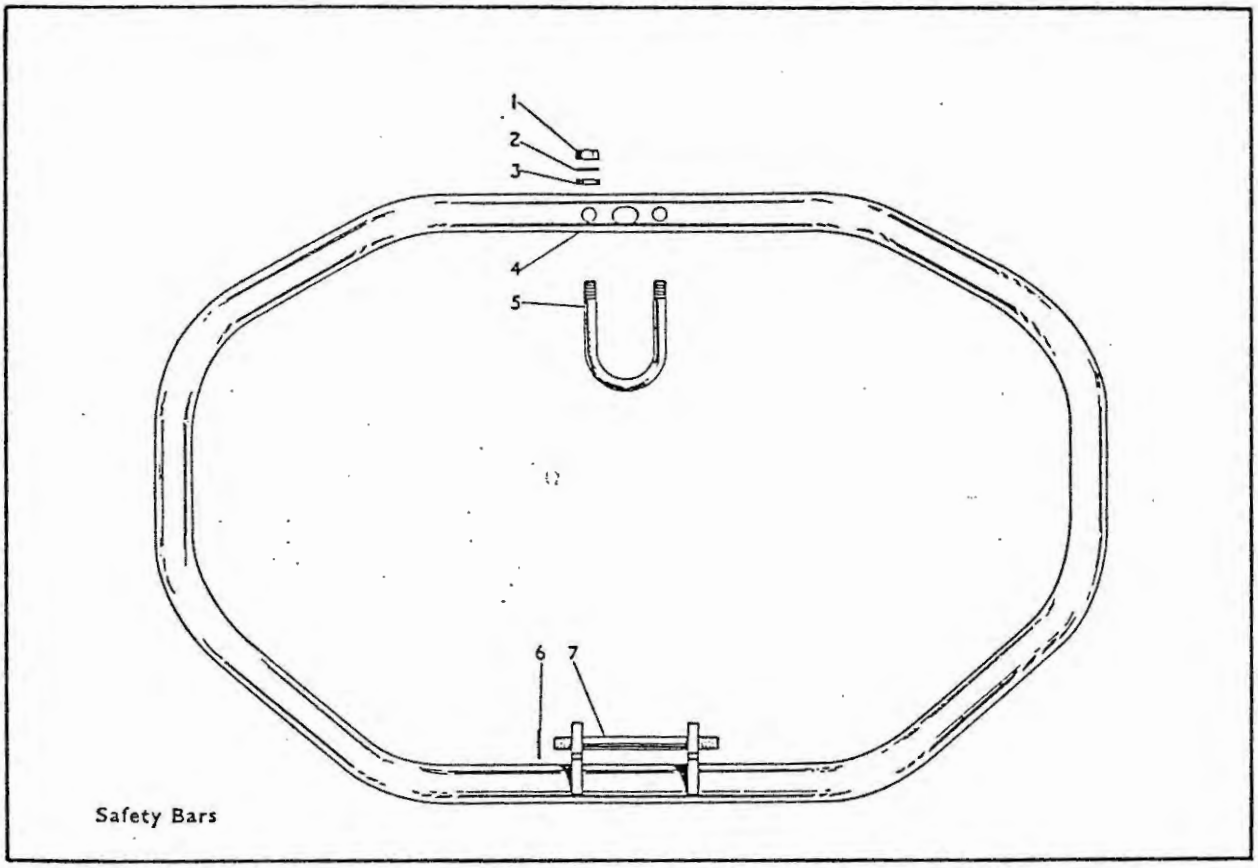

Plate 35 LEGSHIELDS

B31 B33 Rigid and Spring Frame

Plate Ref. Number.	Models.	Part No.	Description.	Number per set.
—	B31 B33	66–7366	Legshields assembled complete	1
1	B31 B33	15–7161	Legshield clip support screw	8
—	B31 B33	27–8560	Legshield clip support screw washer (plain)	8
—	B31 B33	2–2395	Legshield clip support screw nut	8
2	B31 B33	2–46	Legshield bottom support plate stud nut	2
3	B31 B33	66–7373	Legshield bottom support plate	2
4	B31 B33	2–452	Engine plate and crankcase stud locknut	1
5	B31 B33	66–7372	Engine plate and crankcase stud	1
6	B31 B33	2–522	Engine plate and crankcase stud washer (spring) (existing)	2
7	B31 B33	2–46	Engine plate and crankcase stud nut (existing)	2
8	B31 B33	2–2903	Legshield bottom support plate stud washer (spring)	2
9	B31 B33	66–7370	Legshield support tube (bottom)	2
10	B31 B33	29–6110	Legshield bottom support plate bolt	2
11	B31 B33	2–2903	Legshield bottom support plate bolt washer (spring)	2
12	B31 B33	66–7367	Legshield only	2
13	B31 B33	65–7286	Legshield support frame clip (right-hand)	1
14	B31 B33	65–7287	Legshield support frame clip (left-hand)	1
15	B31 B33	66–7353	Legshield support tube clip	8
16	B31 B33	66–7368	Legshield top support tube	1
17	B31 B33	27–7979	Legshield support tube sleeve nut	2

Plate 35

LEGSHIELDS

B31 B33 Rigid and Spring

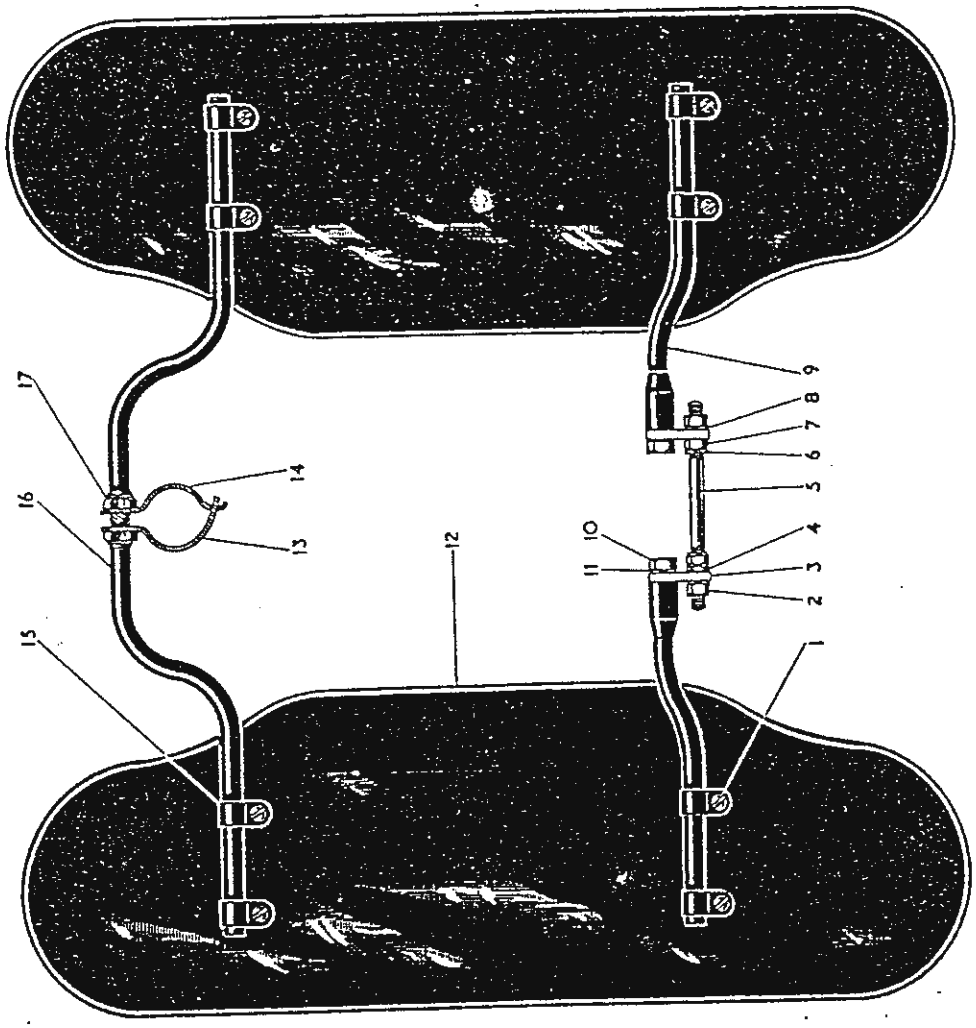

Legshields

LEGSHIELDS

B31 B33 Swinging Arm Frame

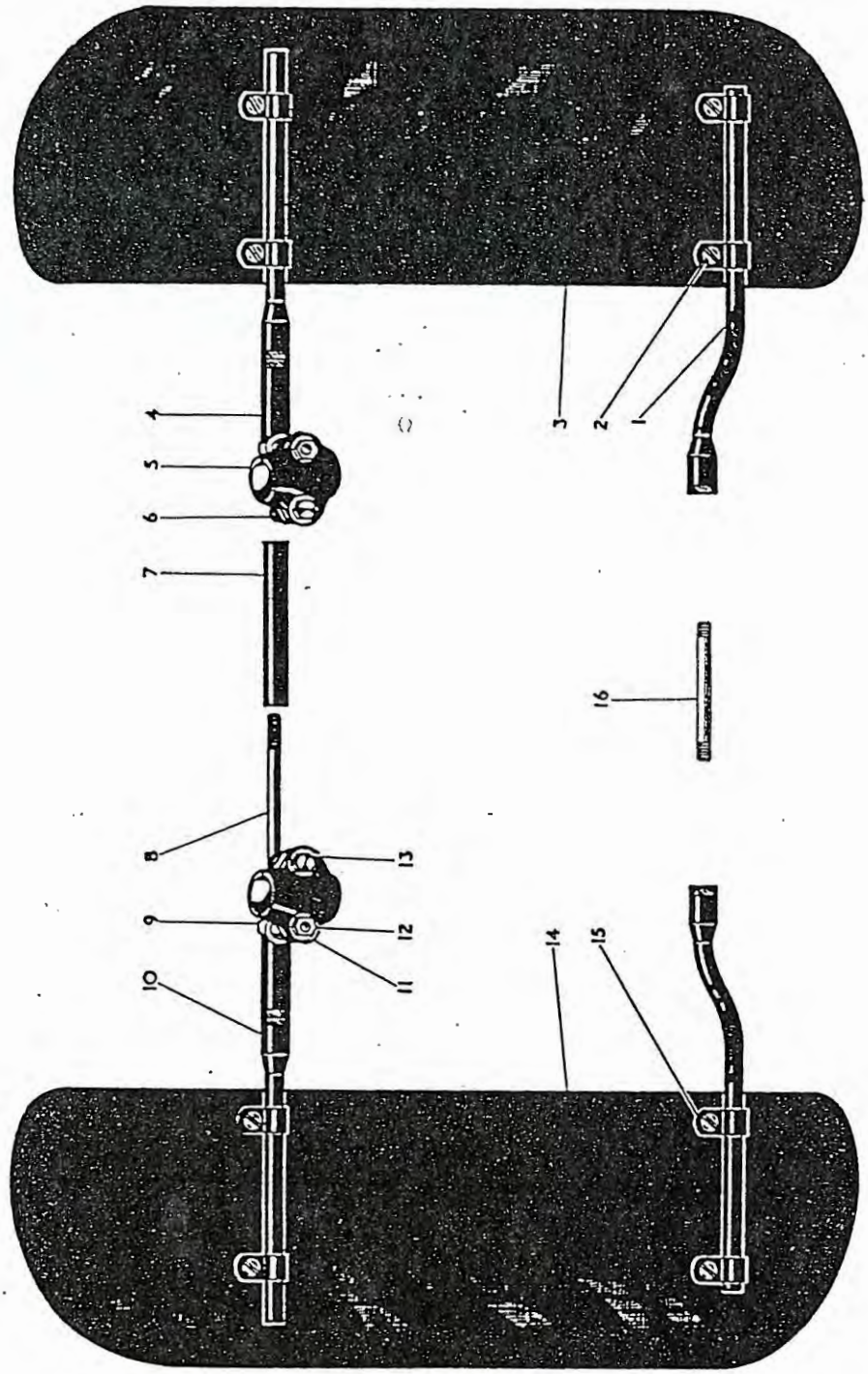

Legshields

Plate 36 LEGSHIELDS

B31 B33 Swinging Arm Frame

Plate Ref. Number.	Models.	Part No.	Description.	Number per set.
—	B31 B33	42–7219	Legshields assembled complete	1
1	B31 B33	42–7216	Legshield support tube complete (bottom)	2
2	B31 B33	15–7161	Legshield support tube clip screw	8
—	B31 B33	27–8560	Legshield support tube clip washer (plain)	8
—	B31 B33	2–2395	Legshield support tube clip nut	8
3	B31 B33	42–7207	Legshield (nearside)	1
4	B31 B33	67–7205	Legshield top cross tube adaptor	2
5	B31 B33	42–4906	Legshield front down tube split clamp	2
6	B31 B33	2–803	Legshield front down tube bolt	2
7	B31 B33	42–7210	Legshield top spacing sleeve	1
8	B31 B33	42–7211	Legshield top cross tube adaptor stud	1
9	B31 B33	42–7212	Legshield front down tube clamp eye bolt	2
10	B31 B33	66–7351	Legshield support tube complete (top) (1956)	2
11	B31 B33	2–522	Legshield front down tube bolt washer (spring)	4
12	B31 B33	2–46	Legshield front down tube bolt nut	4
13	B31 B33	2–2138	Legshield front down tube bolt washer (plain)	4
14	B31 B33	42–7206	Legshield (offside)	1
15	B31 B33	66–7353	Legshield support tube clip	8
16	B31 B33	27–5684	Crankcase and engine plate stud (existing)	1

Plate 37 LEGSHIELDS & FRONT SAFETY BAR

B31 B33 Swinging Arm Frame

Plate Ref. Number.	Models.	Part No.	Description.	Number per set.
—	B31 B33	42–7215	Legshield and front safety bar assembly	1
1	B31 B33	42–7211	Legshield top cross tube adaptor stud	1
2	B31 B33	42–7210	Legshield top spacing sleeve	1
3	B31 B33	67–7205	Legshield top cross tube adaptor	2
4	B31 B33	66–7351	Legshield support tube (top) complete	2
5	B31 B33	2–2395	Legshield support tube clip nut	8
6	B31 B33	27–8560	Legshield support tube clip washer (plain)	8
7	B31 B33	2–522	Legshield front down tube split clamp eye bolt washer (spring)	2
8	B31 B33	2–522	Front safety bar eye bolt washer (spring)	2
9	B31 B33	2–46	Front safety bar eye bolt nut	2
10	B31 B33	42–7212	Legshield front down tube split clamp eye bolt	2
11	B31 B33	2–46	Front safety bar top fixing bolt nut	2
12	B31 B33	2–46	Front safety bar top fixing bolt nut	1
13	B31 B33	2–522	Front safety bar top fixing bolt washer (spring)	1
14	B31 B33	42–4905	Front safety bar eye bolt spacing tube	1
15	B31 B33	42–4904	Front safety bar eye bolt	2
16	B31 B33	65–4185	Front safety bar top fixing bolt	1
17	B31 B33	66–7353	Legshield support tube clip	8
18	B31 B33	42–4906	Legshield front support tube split clamp	2
19	B31 B33	66–7351	Legshield support tube complete (top)	2
20	B31 B33	42–7216	Legshield support tube complete (bottom)	2
21	B31 B33	15–7161	Legshield support tube clip screw	8
22	B31 B33	42–7206	Legshield (offside)	1
23	B31 B33	42–4900	Front safety bar assembly	1
24	B31 B33	42–4907	Front safety bar engine plate distance collar	2
25	B31 B33	42–7207	Legshield (nearside)	1

Plate 37

LEGSHIELDS & FRONT SAFETY BAR

B31 B33 Swinging Arm Frame

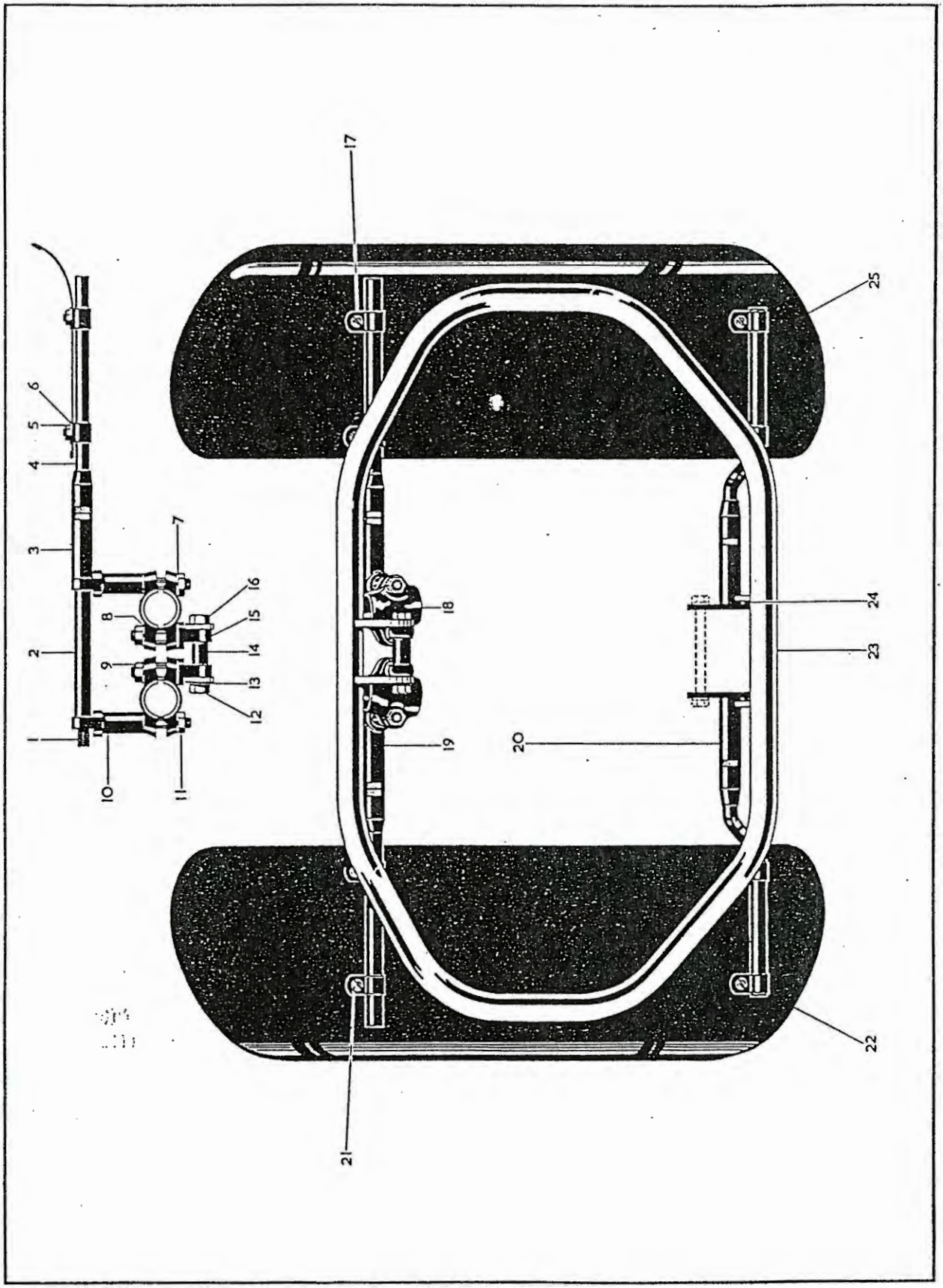

TOOLS & SUNDRIES

B Group

Plate Ref. Number.	Models.	Part No.	Description	Number per set.
1	B Group	66–9132	Sparking plug spanner	1
2	B Group	65–9246	Combined spanner (1954/5)	1
2	B Group	65–9246	Carburetter and tappet adjusting spanner	1
3	B Group	29–9253	Tommy bar	1
4	B Group	29–9254	Combination spanner	1
5	B32 B34	65–9282	Toolbag only (1956)	1
6	B31 (rigid and spring)	65–9266	Front brake cover nut spanner	1
6	B31 B33 (swinging arm)	65–9266	Rear spindle nut spanner	1
6	B31 B33	42–9118	Front wheel box spanner (1956)	1
7	B32 B34 (swinging arm)	66–9036	Box spanner (1956)	1
8	B Group	24–8957	Petrol tank fixing bolt tommy bar (1956)	1
9	B Group	65–9115	Box spanner (small)	1
10	B Group	65–9130	Tappet feelers (set)	1
11	B Group	42–9026	Inflator	1
12	B32 B34	67–9028	Double ended spanner (1956)	1
13	B Group	1–3051	B.S.A. double ended spanner	1
14	B31 B33 (rigid and spring)	65–9170	Pillion seat	1
15	B Group	29–9252	Tyre lever	1
16	B31 B33 (rigid and spring)	15–7161	Pillion seat bolt	4
17	B31 B33 (rigid and spring)	2–1462	Pillion seat bolt washer (spring)	4
18	B31 B33 (rigid and spring)	2–2395	Pillion seat bolt nut	4
19	B32 B34 (swinging arm)	29–9257	Box spanner (1956)	1
20	B Group (swinging arm) (competition rigid models)	42–9031	Petrol tank fixing bolt spanner	1
21	B Group (swinging arm)	42–9080	Damper unit adjusting spanner	1
22	B Group	29–9251	Magdyno spanner	1
23	B Group	29–9255	Front hub spanner	1
24	B32 B34	29–9256	Swinging arm pivot spindle nut spanner (1956)	1
25	B Group	65–9243	Fork top nut and gland spanner	1
26	B31 B33	65–9205	Toolbag only (1956)	1
26	B Group	65–9205	Toolbag only (1954/5)	1
27	B31 B33	15–832	Box spanner	1
28	B Group	65–9132	Tappet spanner	1
29	B Group	65–9133	Tappet adjusting spanner	1
—	B31 B33 (rigid)	65–9204	Toolbag complete with tools (1954/5)	1
—	B31 B33 (spring)	65–9277	Toolbag complete with tools (1954/5)	1
—	B32 B34 (competition)	65–9277	Toolbag complete with tools (1954/5)	1
—	B Group (swinging arm)	42–9090	Toolbag complete with tools (1954/5)	1
—	B31 B33 (swinging arm)	42–9109	Toolbag complete with tools (1956)	1
—	B32 B34 (swinging arm)	42–9106	Toolbag complete with tools (1956)	1

TOOLS and SUNDRIES

B Group

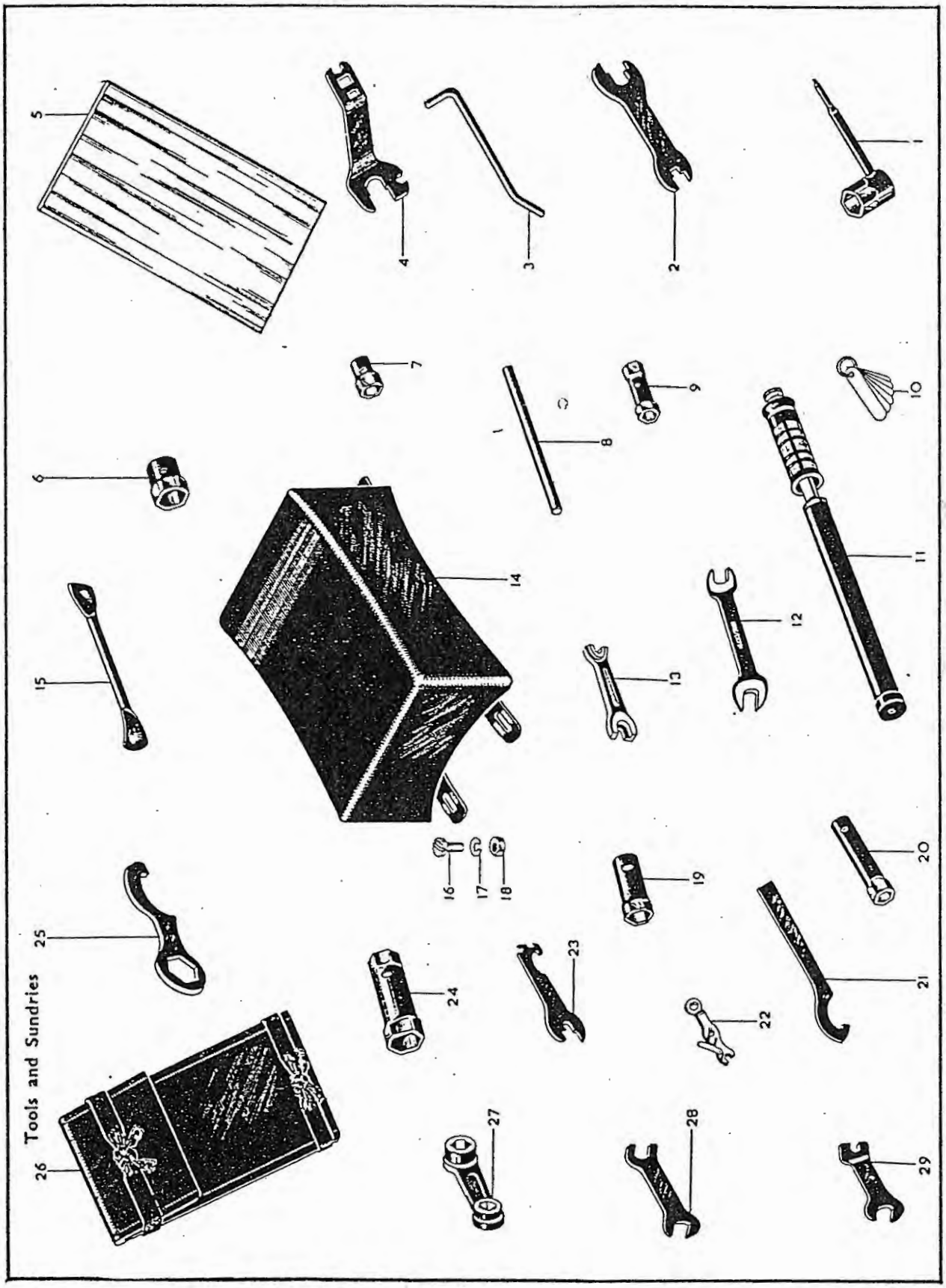

ELECTRICAL EQUIPMENT

B Group

Plate Ref. Number.	Models.	Part No.	Description.	Number per set.
1	B31 B33 (rigid and spring)	2–15SS	Stop lamp switch clip screw nut	1
2	B31 B33 (rigid and spring)	29–3319	Stop lamp switch clip screw washer (shakeproof)	1
3	B31 B33 (rigid and spring)	65–922S	Stop lamp switch clip	1
4	B31 B33 (rigid and spring)	65–5912	Stop lamp switch clip screw	1
5	B31 B33 (rigid and spring)	65–9231	Stop lamp operating spring	1
6	B31 B33 (rigid and spring)	19–1106	Stop lamp switch	1
7	B31 B33 (rigid and spring)	29–9342	Stop lamp switch plate	1
8	B31 B33 (rigid and spring)	2–1309	Stop and tail lamp switch screw	2
9	B31 B33 (rigid and spring)	29–3319	Stop and tail lamp switch screw washer	2
10	B31 B33 (rigid and spring)	2–47	Stop and tail lamp switch screw nut	2
11	B31 B33 (rigid and spring)	3–1399	Switch plate bolt (when pillion footrests are not fitted)	1
12	B31 B33 (rigid and spring)	2–S61	Switch plate bolt washer (plain) (when pillion footrests are not fitted)	1
13	B31 B33 (rigid and spring)	2–449	Switch plate bolt nut (when pillion footrests are not fitted)	1
14	B31 B33 (rigid and spring)	19–1011	Stop and tail lamp (1954/5) B31 B33 (1956)	1
14	B31 B33 (rigid and spring)	19–1000	Stop and tail lamp (1954)	1
15	B31 B33 (rigid and spring)	2–14	Voltage control support bolt (mudguard fixing)	2
16	B31 B33 (rigid and spring)	2–1374	Voltage control support bolt washer (plain) (mudguard fixing)	2
17	B31 B33 (rigid and spring)	24–S7S4	Voltage control support bolt washer (spring) (mudguard fixing)	2
18	B31 B33 (rigid and spring)	2–2395	Voltage control support bolt nut (mudguard fixing)	2
19	B31 B33 (rigid and spring)	27–S560	Voltage control support bolt washer (plain) (mudguard fixing)	2
20	B31 B33 (rigid and spring)	15–73S3	Voltage control support bolt washer (rubber) (mudguard fixing)	2
21	B31 B33 (rigid and spring)	27–S560	Voltage control support bolt washer (plain) (mudguard fixing)	4
22	B31 B33 (rigid and spring)	2–2395	Voltage control support bolt nut (mudguard fixing)	2
23	B Group (swinging arm)	2–1354	Voltage control support bolt (toolbox fixing) (1954/5)	2
23	B31 B33 (swinging arm)	2–1354	Voltage control support bolt (toolbox fixing) (1956)	2
23	B Group (swinging arm)	25–71S0	Voltage control support bolt washer (toolbox fixing) (1954/5)	2
23	B31 B33 (swinging arm)	25–71S0	Voltage control support bolt washer (toolbox fixing) (1956)	2
23	B Group (swinging arm)	2–2395	Voltage control support bolt nut (toolbox fixing) (1954/5)	2
23	B31 B33 (swinging arm)	2–2395	Voltage control support bolt nut (toolbox fixing) (1956)	2
24	B Group	67–9067	Rear reflector (1954)	1
24	B Group	67–9069	Rear reflector (1955)	1
25	B31 B33 (rigid)	19–2022	Electric horn (1954)	1
25	B31 B33 (spring) B Group (swinging arm)	42–9046	Electric horn (1955)	1
25	B31 B33 (swinging arm)	42–9046	Electric horn (1956)	1
26	B Group	29–9221	Licence holder	1
27	B Group	19–1515	Voltage control (1954/5)	1
27	B31 B33 (swinging arm)	19–1515	Voltage control (1956)	1
28	B Group	19–1212	Magdyno (1954/5)	1
28	B31 B33 (swinging arm)	19–1212	Magdyno (1956)	1
29	B Group	19–526	Headlamp (pilot light in reflector) (1955)	1
29	B31 B33 (swinging arm)	19–535	Headlamp (right-hand dip) (home orders only) (1956)	1
29	B31 B33 (swinging arm)	19–536	Headlamp (vertical dip) (export only excepting France and Continent) (1956)	1
29	B31 B33 (swinging arm)	19–537	Headlamp (Continental) (as required) (1956)	1
29	B31 B33 (swinging arm)	19–538	Headlamp (French) (as required) (1956)	1
30	B Group	19–2012	Horn push (1954/5)	1
31	B32 B34 (competition)	65–9267	Speedometer cable (1954/5)	1
32	B32 B34 (competition)	19–1204	Racing magneto (1954/6)	1
33	B31 B33 (rigid and spring)	19–660	Cable harness and dipper switch	1
33	B Group (swinging arm)	19–690	Cable harness and dipper switch (1954/5)	1
34	B Group (swinging arm)	42–9027	Stop lamp switch operating link (1954/5)	1
35	B Group (swinging arm)	65–9235	Stop lamp switch operating spring (1954/5)	1
35	B31 B33 (swinging arm)	42–9129	Stop lamp switch operating spring (1956)	1
36	B Group (swinging arm)	2–47	Stop lamp switch screw nut (1954/5)	2
36	B31 B33 (swinging arm)	2–47	Stop lamp switch screw nut (1956)	2
37	B Group (swinging arm)	29–3319	Stop lamp switch screw washer (shakeproof) (1954/5)	2
37	B31 B33 (swinging arm)	29–3319	Stop lamp switch screw washer (shakeproof) (1956)	2
38	B Group (swinging arm)	19–1114	Stop lamp switch (1954/5)	1
38	B31 B33 (swinging arm)	19–1114	Stop lamp switch (1956)	1
39	B Group (swinging arm)	2–1309	Stop lamp switch screw (1954/5)	2
39	B31 B33 (swinging arm)	2–1309	Stop lamp switch screw (1956)	2
40	B31 B33 (rigid and spring)	19–649	Ammeter (1954/5)	1
40	B31 B33 (swinging arm)	19–649	Ammeter (1956)	1
41	B32 B34 (competition)	65–9111	Speedometer bracket (1954/6)	1
42	B32 B34 (competition)	65–9179	Speedometer bracket bolt (1954/6)	2

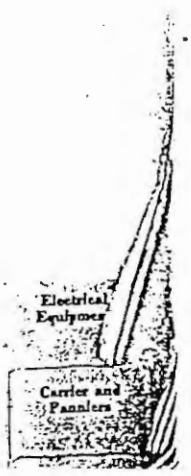

ELECTRICAL EQUIPMENT

B Group

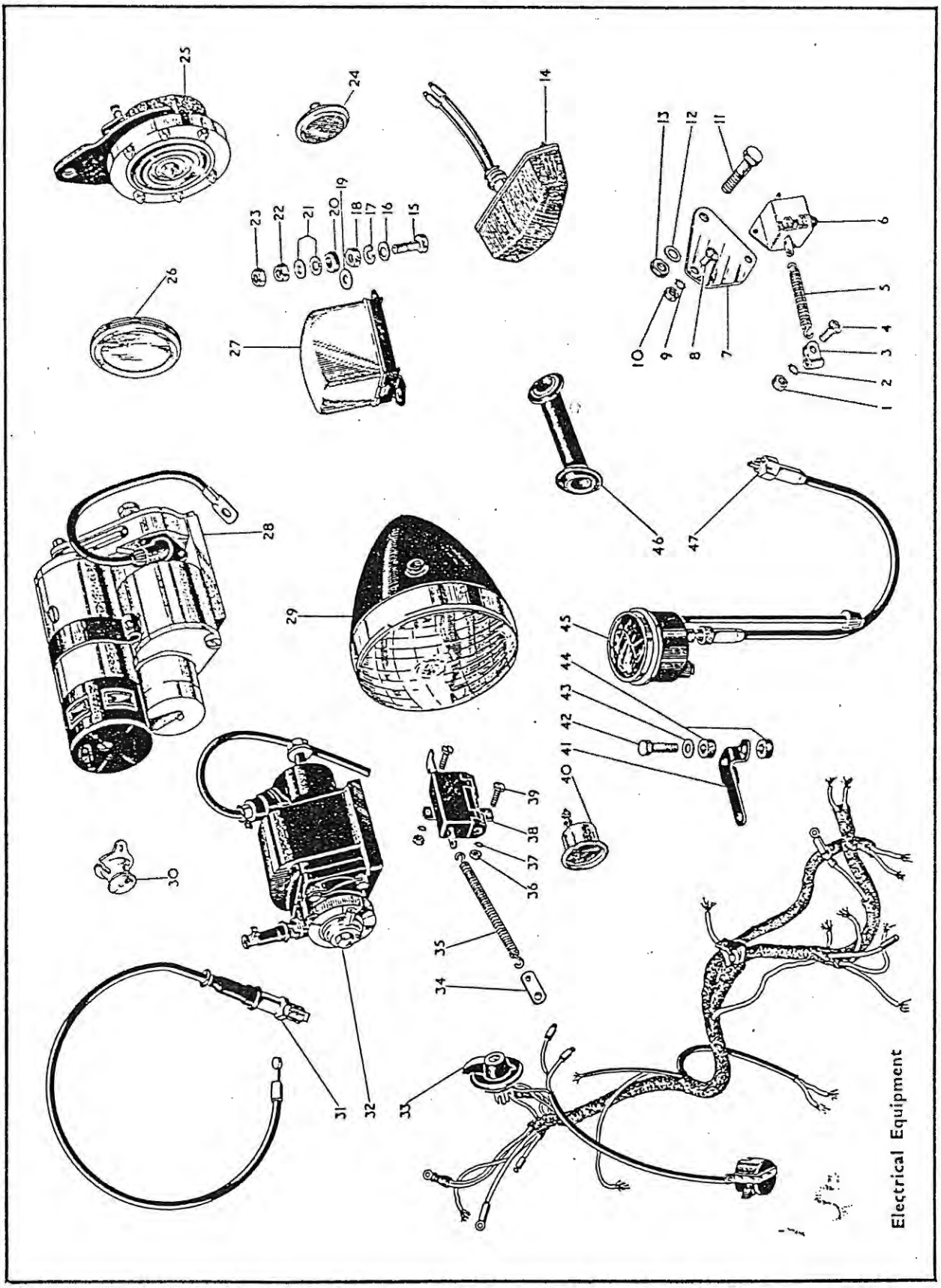

ELECTRICAL EQUIPMENT

B Group

Plate Ref. Number.	Models.	Part No.	Description.	Number per set.
43	B32 B34 (competition)	27–8560	Speedometer bracket bolt washer (1954/6)	2
44	B32 B34 (competition)	15–7383	Speedometer mounting bracket rubber (1954/6)	4
45	B31 (rigid and spring)	19–2103	Speedometer (80 m.p.h.) (1954)	1
45	B31 (rigid and spring)	19–2117	Speedometer (140 k.p.h.) (1954)	1
45	B31 (rigid and spring)	19–2109	Speedometer (120 m.p.h.) (1955)	1
45	B31 (rigid and spring)	19–2121	Speedometer (180 k.p.h.) (1955)	1
45	B31 (swinging arm)	19–2108	Speedometer (80 m.p.h. (1954)	1
45	B31 (swinging arm)	19–2118	Speedometer (140 k.p.h.) (1954)	1
45	B31 B33 (swinging arm)	19–2111	Speedometer (120 m.p.h.) (1955/6)	1
45	B31 B33 (swinging arm)	19–2122	Speedometer (180 k.p.h.) (1955/6)	1
45	B32 (swinging arm)	19–2108	Speedometer (80 m.p.h.) (1954/5)	1
45	B32 (swinging arm)	19–2118	Speedometer (140 k.p.h.) (1954/5)	1
45	B34 (swinging arm)	19–2111	Speedometer (120 m.p.h.) (1954/5)	1
45	B34 (swinging arm)	19–2122	Speedometer (180 k.p.h.) (1954/5)	1
45	B32 B34 (competition rigid)	19–2106	Speedometer (120 m.p.h.)	1
45	B32 B34 (swinging arm)	19–2106	Speedometer (120 m.p.h.) (1956)	1
45	B32 B34 (competition rigid)	19–2120	Speedometer (180 k.p.h.)	1
45	B32 B34 (swinging arm)	19–2120	Speedometer (180 k.p.h.) (1956)	1
46	B31 B33 (rigid and spring) B Group (swinging arm)	19–2126	Speedometer cable rubber grommet (1954/5)	1
47	B31 B33 (rigid and spring)	29–9326	Speedometer cable	1
47	B Group (swinging arm)	67–9057	Speedometer cable (1954/5)	1
47	B31 B33 (swinging arm)	65–9267	Speedometer cable (1956)	1
47	B32 B34 (swinging arm)	65–9257	Speedometer cable (1956)	1
—	B Group	19–1552	Battery (1954/6)	1
—	B31 B33 (swinging arm)	42–9012	Voltage control toolbox buffer ring	1
—	B31 B33 (swinging arm)	42–9009	Voltage control cable grommet	1
—	B31 B33 (swinging arm)	66–9049	Rubber cable clip	15
—	B32 B34 (swinging arm)	66–9049	Rubber cable clip	10
—	B31 B33 (swinging arm)	19–709	Horn push and dipper switch (Western type handlebars)	1

Plate 40

CARRIER FOR USE WITH PANNIERS

B31 B33 Swinging Arm Frame

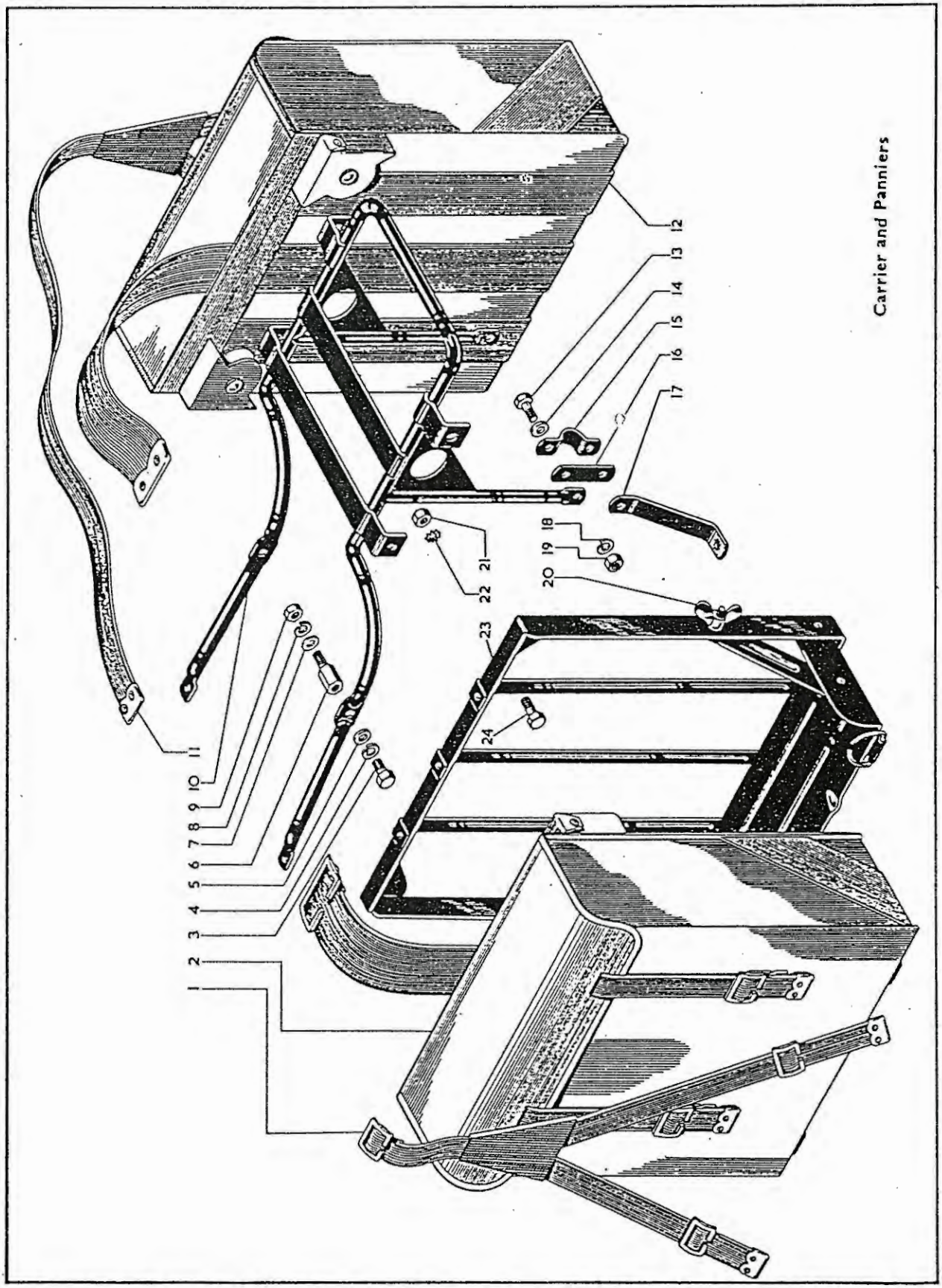

Plate 40

CARRIER FOR USE WITH PANNIERS

B31 B33 Swinging Arm Frame

Plate Ref. Number.	Models.	Part No.	Description.	Number per set.
1	B31 B33	66-6919	Pannier strap (short) with buckle	1
2	B31 B33	66-6916	Pannier bag with buckle	1
3	B31 B33	1-5069	Carrier fixing bolt	2
4	B31 B33	24-8784	Carrier fixing bolt washer (spring)	2
5	B31 B33	2-923	Carrier fixing bolt washer (plain)	2
6	B31 B33	65-6794	Carrier and mudguard support stud	2
7	B31 B33	2-923	Carrier and mudguard stud washer (plain)	2
8	B31 B33	24-8784	Carrier and mudguard stud washer (spring)	2
9	B31 B33	2-49	Carrier and mudguard stud nut	2
10	B31 B33	42-6925	Carrier complete	1
11	B31 B33	66-6918	Pannier bag strap (long) less buckle	1
12	B31 B33	66-6917	Pannier bag less buckle	1
13	B31 B33	24-225	Carrier and clip fixing bolt	4
14	B31 B33	2-525	Carrier and clip fixing bolt washer (plain)	4
15	B31 B33	66-6763	Carrier clip	2
16	B31 B33	42-6929	Carrier clip plate	2
17	B31 B33	42-6928	Pannier support bracket	2
18	B31 B33	2-1462	Carrier and clip fixing bolt washer (spring)	4
19	B31 B33	2-2395	Carrier and clip fixing bolt nut	4
20	B31 B33	66-6938	Pannier carrier steady stay locking screw wing nut	4
21	B31 B33	2-2395	Pannier fixing bolt nut	6
22	B31 B33	29-541	Pannier fixing bolt washer (shakeproof)	6
23	B31 B33	66-6915	Pannier carrier	2
24	B31 B33	2-204	Pannier fixing bolt	6
—	B31 B33	1-5069	Carrier fixing bolt (front) (required when dual seat is fitted)	2
—	B31 B33	2-923	Carrier fixing bolt washer (front) (required when dual seat is fitted)	2
—	B31 B33	24-8784	Carrier fixing bolt washer (front) (spring) (required when dual seat is fitted)	2

STANDARD BOLTS. All Bolts are C.E.I. unless otherwise stated

Part No.	Length under Head.	Thickness of Head.	Length of Thread.	Across Flats.	Diameter.
2-14	1 1/32″	3/16″	13/16″	.440″ Hex.	1/4″
2-204	1/2″	3/16″	1/2″	.440″ Hex.	1/4″
2-220	3/8″	3/16″	3/8″	.440″ Hex.	1/4″
2-1354	.641″	.187″	.641″	.440″ Hex.	1/4″
2-1402	7/8″	1/8″	3/8″	.440″ Hex.	1/4″
2-2273	7/16″	5/32″	3/8″	.440″ Hex.	1/4″
24-225	.750″	.187″	3/8″	.440″ Hex.	1/4″
1-5069	.625″	.187″	.625″	.525″ Hex.	5/16″
2-129	.750″	.250″	.625″	.440″ Hex.	5/16″
2-1934	.750″	.156″	.625″	.440″ Hex.	5/16″
2-6026	1.187″	.156″	.625″	.440″ Hex.	5/16″
15-480	1.109″	.250″	.781″	.525″ Hex.	5/16″
15-1355	1.500″	.218″	.625″	.525″ Hex.	5/16″
15-7354	.625″	.156″	.625″	.440″ Hex.	5/16″
27-6311	.750″	.125″	.625″	.440″ Hex.	5/16″
28-2338	.718″	.218″	.687″	.525″ Hex.	5/16″
24-649	.877″	.187″	.877″	.594″ Hex.	3/8″
65-4185	2.687″	.250″	.750″	.504″ Hex.	3/8″

All Bolts are C.E.I. (Screwdriver slotted) unless otherwise stated

Part No.	Length under Head.	Thickness of Head.	Length of Thread.	Across Head.	Diameter.
1-4606	.500″	.125″	.500″	.312″	3/16″
2-360	.406″	.078″	.406″	.312″	3/16″
2-498	.312″	.062″	.312″	.312″	3/16″ Whit.
2-1309	.343″	.062″	.343″	.312″	3/16″
2-2582	.343″	.125″	.343″	.250″	3/16″ Whit.
24-7065	.250″	.062″	.250″	.312″	3/16″
2-77	.312″	.062″	.312″	.375″	1/4″
2-79	.500″	.109″	.500″	.375″	1/4″
2-510	.656″	.093″	.375″	.375″	1/4″
2-1500	.687″	.109″	.375″	.375″	1/4″
2-2210	.718″	.062″	.562″	.562″	1/4″
2-2378	.656″	.109″	.656″	.375″	1/4″
15-7161	.500″	.125″	.312″	.500″	1/4″
2-2980	1.25″	.93″	.625″	.562″	5/16″

STANDARD NUTS. All Nuts are C.E.I. unless otherwise stated

Part No.	Across Flats.	Thickness.	Size.	Part No.	Across Flats.	Thickness.	Size.
1-4616	.340″ Hex.	.162″	3/16″	2-1813	.594″ Hex.	.218″	3/8″
2-47	.312″ Hex.	.140″	3/16″	3-720	.594″ Hex.	.187″	3/8″
2-1588	.255″ Hex.	.110″	3/16″	24-5161	.594″ Hex.	.343″	3/8″
15-8147	.340″ Hex.	.125″	3/16″	24-5764	.782″ Hex.	.312″	3/8″
25-7151	.340″ Hex.	.187″	3/16″	2-440	.594″ Hex.	.312″	7/16″
1-6032	.340″ Hex.	3/16″	1/4″	2-933	.525″ Hex.	.375″	7/16″
2-51	.440″ Hex.	.250″	1/4″	2-1925	.782″ Hex.	.375″	7/16″
2-53	.440″ Hex.	.109″	1/4″ Whit.	15-152	.592″ Hex.	.406″	7/16″
2-443	.440″ Hex.	.109″	1/4″	15-541	.782″ Hex.	.281″	7/16″
2-1027	.340″ Hex.	1/8″	1/4″	24-5860	.594″ Hex.	.187″	7/16″
2-2395	.440″ Hex.	.187″	1/4″	25-4325	.919″ Hex.	.540″	7/16″
2-49	.525″ Hex.	.218″	5/16″	2-52	.919″ Hex.	.406″	1/2″
2-833	.440″ Hex.	.343″	5/16″	2-124	.782″ Hex.	.203″	1/2″
2-1616	.440″ Hex.	.125″	5/16″	24-7000	.782″ Hex.	.250″	1/2″
15-5196	.525″ Hex.	.281″	5/16″	27-6716	.782″ Hex.	.187″	1/2″
15-6524	.525″ Hex.	.175″	5/16″	2-835	.919″ Hex.	.375″	9/16″
24-563	.440″ Hex.	.187″	5/16″	15-1455	.782″ Hex.	.218″	9/16″
24-6040	.525″ Hex.	.156″	5/16″	24-4255	.919″ Hex.	.187″	9/16″
1-1706	.594″ Hex.	.250″	3/8″	28-53	.782″ Hex	.344″	9/16″
2-46	.594″ Hex.	.312″	3/8″				

STANDARD WASHERS (Plain)

Part No.	Outside Dia.	Inside Dia.	Thickness.	Part No.	Outside Dia.	Inside Dia.	Thickness.
1–1804	.680″	.385″	.072″	2–2580	.500″	.275″	.064″
2–130	.687″	.380″	.080″	3–3525	.562″	.218″	.048″
2–370	.625″	.317″	.156″	15–39	.843″	.505″	.064″
2–525	.500″	.255″	.048″	15–431	.750″	.442″	.064″
2–861	.750″	.380″	.081″	15–5155	.525″	.328″	.048″
2–923	.625″	.317″	.062″	24–594	.937″	.505″	.092″
2–1096	.375″	.192″	.044″	24–7911	.875″	.380″	.156″
2–1291	.750″	.522″	.080″	25–7180	1.00″	.281″	.048″
2–1374	.656″	.255″	.080″	26–9461	.562″	.203″	.048″
2–1945	.875″	.442″	.064″	27–5676	1.00″	.380″	.092″
2–2138	.380″	.750″	.064″	27–8560	.625″	.255″	.048″

STANDARD WASHERS (Spring)

Part No.	Outer Dia.	Inside Dia.	Thickness.	Part No.	Outer Dia.	Inside Dia.	Thickness.
2–522	.750″	.390″	.056″	15–716	.937″	.453″	.064″
2–995	.656″	.380″	.040″ double	24–978	.437″	.255″	.040″
2–1462	.593″	.255″	.040″	24–6035	.593″	.317″	.040″ double
2–1967	.875″	.440″	.064″	27–6043	.750″	.437″	.046″ double
2–2903	.562″	.406″	.062″	24–8784	.625″	.315″	.040″
3–110	.441″	.281″	.080″	35–33	.500″	.343″	.080″
3–111	.614″	.406″	.104″				

STANDARD WASHERS (Shakeproof)

Part No.	Outer Diameter.	Inside Diameter.	Part No.	Outer Diameter.	Inside Diameter.
29–541	1/2″	1/4″	36–399	11/16″	3/8″
29–3319	3/8″	3/16″	65–595	7/8″	1/2″
36–341	9/16″	5/16″	66–4707	11/16″	3/8″
36–382	9/16″	5/16″	66–4708	3/4″	7/16″

ENGINE AND FRAME MARKINGS 1954

Model	Engine No.		Rigid Frame No.		Spring Frame No.	
B31 350 c.c. O.H.V.	BB31-6001	upwards	BB31-13S6	upwards	BB31S-5S95	upwards
B33 500 c.c. O.H.V.	BB33-2001	upwards	BB31-13S6	upwards	BB31S-5S95	upwards
B32 350 c.c. O.H.V. (Comp.)	BB32A-201	upwards	BB32R-121	upwards		
B34 500 c.c. O.H.V. (Comp.)	BB34A-201	upwards	BB32R-121	upwards		

SWINGING ARM FRAME 1954

Model	Engine No.		Swinging Arm Frame No.	
B31 350 c.c. O.H.V.	BB31-6001	upwards	CB31-101	upwards
B33 500 c.c. O.H.V.	BB33-2001	upwards	CB31-101	upwards
B32 350 c.c. O.H.V. (Comp.)	BB32A-201	upwards	CB31-101	upwards
B34 500 c.c. O.H.V. (Comp.)	BB34A-201	upwards	CB31-101	upwards

ENGINE AND FRAME MARKINGS 1955
PLUNGER AND COMPETITION RIGID FRAMES

Model	Engine No.		Frame No.	
B31 (Plunger)	BB31-15001	upwards	BB31S-12001	upwards
B33 (Plunger)	BB33-5001	upwards	BB31S-12001	upwards
B32 (Rigid Comp.)	BB32A-251	upwards	BB32A-201	upwards
B34 (Rigid Comp.)	BB34A-301	upwards	BB32A-201	upwards

ENGINE AND FRAME MARKINGS 1955
SWINGING ARM FRAME

Model	Engine No.		Frame No.	
B31 (Swinging Arm)	BB31-15001	upwards	CB31-6001	upwards
B33 (Swinging Arm)	BB33-15001	upwards	CB31-6001	upwards

ENGINE AND FRAME MARKINGS 1956
SWINGING ARM FRAME

Model	Engine No.		Frame No.	
B31 (Swinging Arm)	BB31-22001	upwards	EB31-101	upwards
B32 (Swinging Arm)	BB32A-301	upwards	CB34-101	upwards
B33 (Swinging Arm)	BB33-7301	upwards	EB31-101	upwards
B34 (Swinging Arm)	BB34A-351	upwards	CB34-101	upwards

CARBURETTERS 1954

MESSRS. AMALGAMATED CARBURETTERS LTD., PERRY BARR, BIRMINGHAM.

Model	Part No.	Type	Choke Size (inches)	Main Jet Number	Throttle Valve Number	Needle Position	Needle Jet	Engine End Size (inches)
B31	19–2324	276GC/1AT	1	150	6/4	3	.1065	1 1/16
B32	19–2324	276GC/1AT	1	150	6/4	3	.1065	1 1/16
B33	19–2325	289W/1AT	1 1/8	*200	29/4	3	.1065	1 1/8
B34	19–2325	289W/1AT	1 1/8	*200	29/4	3	.1065	1 1/8

*No. 170 Jet when Air Cleaner is fitted.

CARBURETTERS 1955

Model	Part No.	Type	Choke Size (inches)	Main Jet Number	Throttle Valve Number	Needle Position	Needle Jet	Engine End Size (inches)
B31 Plunger Frame	19–2324	276GC/1AT	1	150	6/4	3	.1065	1 1/16
B33 Plunger Frame	19–2325	289W/1AT	1 1/8	*200	29/4	3	.1065	1 1/8
B32 Competition	19–2324	276GC/1AT	1	150	6/4	3	.1065	1 1/16
B34 Competition	19–2325	289W/1AT	1 1/8	*200	29/4	3	.1065	1 1/8
B31 Swinging Arm	65–900	376/2	1	260	376/3½	2	.1065	1
B33 Swinging Arm	65–904	389/3	1 1/16	260	376/3½	3	.1065	1 1/16

*No. 170 Jet when Air Cleaner is fitted.

CARBURETTERS 1956

Model	Part No.	Type	Choke Size (inches)	Main Jet Number	Pilot Jet	Throttle Valve Number	Needle Position	Needle Jet	Engine End Size (inches)
B31 Swinging Arm	65–900 With air bell ... 65–901 When air cleaner is used	376/2 376/3	1	*260	30	376/3½	2	.1065	1
B32 Swinging Arm	65–900	376/2	1	260	30	376/3½	2	.1065	1
B33 Swinging Arm	65–904 With air bell ... 65–905 When air cleaner is fitted	376/10	1 1/16	*260	25	376/3½	3	.1065	1 1/16
B34 Swinging Arm	65–904	376/10	1 1/16	260	25	376/3½	3	.1065	1 1/16

*When air cleaner is fitted main jet B31 200, B33 210.

PISTONS 1954

Model	Comp. Ratio	Pistons Complete			Compression Ring			Scraper Ring		
		Standard	½ mm. O.S.	1 mm. O.S.	Standard	½ mm. O.S.	1 mm. O.S.	Standard	½ mm. O.S.	1 mm. O.S.
B31	6.5 to 1	65-809	65-811	65-813	65-744 (2)	65-745 (2)	65-746 (2)	65-735	65-736	65-737
B32	6.5 to 1	65-1679	65-1764	65-1765	65-744 (2)	65-745 (2)	65-746 (2)	65-735	65-736	65-737
B33	6.5 to 1	65-1692	65-1694	65-1696	65-1250(2)	65-1251(2)	65-1252(2)	65-1253	65-1254	65-1255
B33	7.5 to 1	65-1660	65-1662	65-1664	65-1250(2)	65-1251(2)	65-1252(2)	65-1253	65-1254	65-1255
B34	6.8 to 1	65-1244	65-1260	65-1262	65-1250(2)	65-1251(2)	65-1252(2)	65-1253	65-1254	65-1255
B34	7.5 to 1	65-1264	65-1266	65-1268	65-1250(2)	65-1251(2)	65-1252(2)	65-1253	65-1254	65-1255

PISTONS 1955/6

Model	Comp. Ratio	Pistons Complete			Compression Ring			Scraper Ring		
		Standard	½ mm. O.S.	1 mm. O.S.	Standard	½ mm. O.S.	1 mm. O.S.	Standard	½ mm. O.S.	1 mm. O.S.
B31	6.5	65-809	65-811	65-813	65-744 (2)	65-745 (2)	65-746 (2)	65-735	65-736	65-737
B31	7.5	65-754	65-755	65-756	65-744 (2)	65-745 (2)	65-746 (2)	65-490	65-491	65-492
B33	6.5	65-1692	65-1694	65-1696	65-1250(2)	65-1251(2)	65-1252(2)	65-1253	65-1254	65-1255
B33	7.5	65-1660	65-1662	65-1664	65-1250(2)	65-1251(2)	65-1252(2)	65-1253	65-1254	65-1255
B32	6.5	65-1679	65-1764	65-1765	65-1621(2)	65-1622(2)	65-1623(2)	65-735	65-736	65-737
B34	6.8	65-1244	65-1260	65-1262	65-1250(2)	65-1251(2)	65-1252(2)	65-1253	65-1254	65-1255
B34	7.5	65-1264	65-1266	65-1268	65-1250(2)	65-1251(2)	65-1252(2)	65-1253	65-1254	65-1255

British Only

MOTORCYLES AND PARTS INC.

32451 PARKLANE ST.
GARDEN CITY, MI 48135 USA

WWW.BRITISHONLY.COM
INFO@BRITISHONLY.COM

RETAIL: 1-800-278-6659 ***WHOLESALE: 1-800-852-9253*** ***FAX: 1-734-422-9253***

WORLDS LARGEST SELECTION OF FACTORY ORIGINAL NEW AND USED PARTS

45,000 SQ. FT. OF MOTORCYLE PARTS & ACCESSORIES FROM 1911 TO 1984 FOR ALL BRITISH MAKES!
CASH FOR ALL BRITISH BIKES, PARTS AND LITERATURE

SPECIALIZING IN
VINTAGE MOTORCYLCE PARTS

TRIUMPH
Norton
BSA

THE BIGGEST!

ENGINE REBUILDING PARTS
GASKET - SEALS - BEARINGS
BUSHINGS - PISTONS - RINGS
CLUTCHES - TUNE UP PARTS
SPEED EQUIPMENT

THE BEST!

STOCK AND CUSTOM PARTS
SEATS - HANDLEBARS - CHAINS
TIRES - TUBES - EXHAUST PIPES
MUFFLERS - GAS TANKS - FENDERS
RESTORATION PARTS

THE ONLY!

Central Wheel Components · Barnett Clutches & Cables · Classic Transfers Robert Derrick Ltd · Renold · Lucas · Amal · Emgo Your Powersport Supplier · Brituro England · JP Pistons · Hastings · UH

VELOCETTE • ANDOVER NORTON • TEC • HAYNES • P&P SEATING • WASSELL • MORGO
ALPHA BEARINGS • M.A.C. PRODUCTS • JOE HUNT MAGNETOS • J.J. CABLES • BUCHANAN'S
L.A. SLEEVE • MEGACYCLE CAMS • T.J. WASSELL LIMITED • SUDCO INTERNATIONAL
ACE CLASSICS LONDON • CLASSIC GASKETS • BRITISH WIRING • PBM ENGINEERING
TRI-COR ENGLAND • LEAK PROOF SEALS • MCA (ASTON) LIMITED • GARDNER - WESTCOTT

WE ACCEPT VISA - MASTERCARD - DISCOVER - AMERICAN EXPRESS

PARTS SHIPPED WORDLWIDE !!! VISA · MasterCard · Discover · American Express

VISIT OUR EBAY STORE
http://stores.ebay.com/British-Only-Motorcycles-And-Parts

British Only

MOTORCYLES AND PARTS INC.

32451 PARKLANE ST.
GARDEN CITY, MI 48135 USA

WWW.BRITISHONLY.COM
INFO@BRITISHONLY.COM

RETAIL: 1-800-278-6659 ***WHOLESALE: 1-800-852-9253*** ***FAX: 1-734-422-9253***

WORLDS LARGEST SELECTION OF FACTORY ORIGINAL NEW AND USED PARTS

45,000 SQ. FT. OF MOTORCYLE PARTS & ACCESSORIES FROM 1911 TO 1984 FOR ALL BRITISH MAKES!
CASH FOR ALL BRITISH BIKES, PARTS AND LITERATURE

SPECIALIZING IN
VINTAGE MOTORCYLCE PARTS

TRIUMPH
Norton
BSA

THE BIGGEST!

ENGINE REBUILDING PARTS
GASKET - SEALS - BEARINGS
BUSHINGS - PISTONS - RINGS
CLUTCHES - TUNE UP PARTS
SPEED EQUIPMENT

THE BEST!

STOCK AND CUSTOM PARTS
SEATS - HANDLEBARS - CHAINS
TIRES - TUBES - EXHAUST PIPES
MUFFLERS - GAS TANKS - FENDERS
RESTORATION PARTS

THE ONLY!

Central Wheel Components · Barnett Clutches & Cables · Classic Transfers Robert Derrick Ltd · Renold · Lucas · Amal · Emgo Your Powersport Supplier · Brituro England · JP Pistons · Hastings · UH

VELOCETTE • ANDOVER NORTON • TEC • HAYNES • P&P SEATING • WASSELL • MORGO
ALPHA BEARINGS • M.A.C. PRODUCTS • JOE HUNT MAGNETOS • J.J. CABLES • BUCHANAN'S
L.A. SLEEVE • MEGACYCLE CAMS • T.J. WASSELL LIMITED • SUDCO INTERNATIONAL
ACE CLASSICS LONDON • CLASSIC GASKETS • BRITISH WIRING • PBM ENGINEERING
TRI-COR ENGLAND • LEAK PROOF SEALS • MCA (ASTON) LIMITED • GARDNER - WESTCOTT

WE ACCEPT VISA - MASTERCARD - DISCOVER - AMERICAN EXPRESS

PARTS SHIPPED WORDLWIDE !!! VISA · MasterCard · Discover · American Express

VISIT OUR EBAY STORE
http://stores.ebay.com/British-Only-Motorcycles-And-Parts

British Only

MOTORCYCLES AND PARTS INC.
32451 PARKLANE ST
GARDEN CITY, MI 48135 USA
PHONE: **800-278-6659**
FAX: **734-422-9253**

Year:	Make:	Model:
Engine #		
Frame #		

WWW.BRITISHONLY.COM
INFO@BRITISHONLY.COM

Quantity	Part #	Description	Each	Amount

Date _____ / _____ / _____ **Customer #** _____ **Salesperson** _____

Card Number _____ **Expires** _____

Name _____

Address _____

City/State/Zip _____

Phone _____ / _____ **Fax** _____

Email _____

Signature _____

Subtotal	
Insurance	
Shipping	
Total	
Michigan Residents Add 6% Sales Tax	
Amount Enclosed	

FOLD

Name _____

Address _____

City _____

State _____ Zip _____

USE
FIRST CLASS
LETTER
POSTAGE

British Only

MOTORCYCLES AND PARTS INC.

32451 PARKLANE ST
GARDEN CITY, MI 48135 USA

FOLD

British Only

MOTORCYCLES AND PARTS INC.
32451 PARKLANE ST
GARDEN CITY, MI 48135 USA
PHONE: **800-278-6659**
FAX: **734-422-9253**

Year:	Make:	Model:
Engine #		
Frame #		

WWW.BRITISHONLY.COM
INFO@BRITISHONLY.COM

Quantity	Part #	Description	Each	Amount

Date _____ / _____ / _____ **Customer #** _____ **Salesperson** _____

Card Number _____ **Expires** _____

Name _____

Address _____

City/State/Zip _____

Phone _____ / _____ **Fax** _____

Email _____

Signature _____

Subtotal	
Insurance	
Shipping	
Total	
Michigan Residents Add 6% Sales Tax	
Amount Enclosed	

FOLD

Name _____

Address _____

City _____

State _____ Zip _____

USE
FIRST CLASS
LETTER
POSTAGE

British Only

MOTORCYCLES AND PARTS INC.

32451 PARKLANE ST
GARDEN CITY, MI 48135 USA

FOLD