SPARES

350 c.c. and 500 c.c. O.H.V.

British Only

MOTORCYLES AND PARTS INC.

32451 PARKLANE ST.
GARDEN CITY, MI 48135 USA

WWW.BRITISHONLY.COM
INFO@BRITISHONLY.COM

RETAIL: 1-800-278-6659 ***WHOLESALE: 1-800-852-9253*** ***FAX: 1-734-422-9253***

WORLDS LARGEST SELECTION OF FACTORY ORIGINAL NEW AND USED PARTS

45,000 SQ. FT. OF MOTORCYLE PARTS & ACCESSORIES FROM 1911 TO 1984 FOR ALL BRITISH MAKES!
CASH FOR ALL BRITISH BIKES, PARTS AND LITERATURE

SPECIALIZING IN
VINTAGE MOTORCYLCE PARTS

TRIUMPH
Norton
BSA

THE BIGGEST!

ENGINE REBUILDING PARTS
GASKET - SEALS - BEARINGS
BUSHINGS - PISTONS - RINGS
CLUTCHES - TUNE UP PARTS
SPEED EQUIPMENT

THE BEST!

STOCK AND CUSTOM PARTS
SEATS - HANDLEBARS - CHAINS
TIRES - TUBES - EXHAUST PIPES
MUFFLERS - GAS TANKS - FENDERS
RESTORATION PARTS

THE ONLY!

Central Wheel Components · Barnett Clutches & Cables · Classic Transfers Robert Derrick Ltd · Renold · Lucas · Amal · Emgo Your Powersport Supplier · Brituro England · JP Pistons · Hastings · UH

VELOCETTE • ANDOVER NORTON • TEC • HAYNES • P&P SEATING • WASSELL • MORGO
ALPHA BEARINGS • M.A.C. PRODUCTS • JOE HUNT MAGNETOS • J.J. CABLES • BUCHANAN'S
L.A. SLEEVE • MEGACYCLE CAMS • T.J. WASSELL LIMITED • SUDCO INTERNATIONAL
ACE CLASSICS LONDON • CLASSIC GASKETS • BRITISH WIRING • PBM ENGINEERING
TRI-COR ENGLAND • LEAK PROOF SEALS • MCA (ASTON) LIMITED • GARDNER - WESTCOTT

WE ACCEPT VISA - MASTERCARD - DISCOVER - AMERICAN EXPRESS

PARTS SHIPPED WORDLWIDE !!! VISA · MasterCard · Discover · American Express

VISIT OUR EBAY STORE
http://stores.ebay.com/British-Only-Motorcycles-And-Parts

British Only

MOTORCYLES AND PARTS INC.

32451 PARKLANE ST.
GARDEN CITY, MI 48135 USA

WWW.BRITISHONLY.COM
INFO@BRITISHONLY.COM

RETAIL: 1-800-278-6659 ***WHOLESALE: 1-800-852-9253*** ***FAX: 1-734-422-9253***

WORLDS LARGEST SELECTION OF FACTORY ORIGINAL NEW AND USED PARTS

45,000 SQ. FT. OF MOTORCYLE PARTS & ACCESSORIES FROM 1911 TO 1984 FOR ALL BRITISH MAKES!
CASH FOR ALL BRITISH BIKES, PARTS AND LITERATURE

SPECIALIZING IN
VINTAGE MOTORCYLCE PARTS

TRIUMPH
Norton
BSA

THE BIGGEST!

ENGINE REBUILDING PARTS
GASKET - SEALS - BEARINGS
BUSHINGS - PISTONS - RINGS
CLUTCHES - TUNE UP PARTS
SPEED EQUIPMENT

THE BEST!

STOCK AND CUSTOM PARTS
SEATS - HANDLEBARS - CHAINS
TIRES - TUBES - EXHAUST PIPES
MUFFLERS - GAS TANKS - FENDERS
RESTORATION PARTS

THE ONLY!

Central Wheel Components · Barnett Clutches & Cables · Classic Transfers Robert Derrick Ltd · Renold · Lucas · Amal · Emgo Your Powersport Supplier · Brituro England · JP Pistons · Hastings · UH

VELOCETTE • ANDOVER NORTON • TEC • HAYNES • P&P SEATING • WASSELL • MORGO
ALPHA BEARINGS • M.A.C. PRODUCTS • JOE HUNT MAGNETOS • J.J. CABLES • BUCHANAN'S
L.A. SLEEVE • MEGACYCLE CAMS • T.J. WASSELL LIMITED • SUDCO INTERNATIONAL
ACE CLASSICS LONDON • CLASSIC GASKETS • BRITISH WIRING • PBM ENGINEERING
TRI-COR ENGLAND • LEAK PROOF SEALS • MCA (ASTON) LIMITED • GARDNER - WESTCOTT

WE ACCEPT VISA - MASTERCARD - DISCOVER - AMERICAN EXPRESS

PARTS SHIPPED WORDLWIDE !!! VISA · MasterCard · Discover · American Express

VISIT OUR EBAY STORE
http://stores.ebay.com/British-Only-Motorcycles-And-Parts

CATALOGUE OF

BSA *Motor Cycles*

All communications relating to Spare Parts or Repairs to Motor Cycles to be addressed to B.S.A. Motor Cycles Ltd. Service Department, Montgomery Street, Birmingham, 11

B.S.A. MOTOR CYCLES LTD.

Directors: SIR BERNARD DOCKER, K.B.E., *(Chairman)* J. LEEK, C.B.E. J. A. T. DICKINSON, O.B.E. H. GAYDON H. J. SMITH.

Registered Offices and Works - - - ARMOURY ROAD, BIRMINGHAM, 11
Telephones: BIRMINGHAM VICTORIA 2381 (30 lines) *Telegrams and Cables:* SELMOTO, BIRMINGHAM"

Service, Spares and Repairs Department *Telephones:* VICtoria 2234 (6 lines)
Telegrams and Cables:, "SELSERV BIRMINGHAM"

Contractors to Her Majesty's Government, the War Office, the Admiralty, the Post Office, the Colonial and Foreign Governments

MCE715-2

Copyright B.S.A. Co. Ltd.

Printed in England
Aug. 1955

Stockists
Engine
Gearbox
Clutch and Front Chaincase
Frame and Fittings
Rear Suspen
Front Fork and Fittings
Front Hub and Wheel Fittings
Rear Hub and Wheel Fittings
Mudguard, Chainguard, Oil Tank and Rear Brake
Petrol Tank, Handlebar, Mudguards, Toolbox and Dual Seat
Handlebars, Handrail and Megaphone
Tools and Sundries, Electrical Equipmen
Numeric Index

GENERAL INDEX

	page
Carburetters	59
Clutch and Front Chaincase	29
Colour Finishes	3
Electrical Equipment	55
Engine (Clubmans and Road Racing)	10–15
Engine (Road Trim, Trials and Scrambles)	15–24
Engine and Frame Markings	59
Frame and Fittings	31–32
Front Fork and Fittings	36–38
Front Hub and Wheel Fittings (7″ brake)	38–39
Front Hub and Wheel Fittings (8″ brake)	39–42
Gearbox	25–28
Handlebar and Controls (Western and 2 Piece Type) Dual Seat, Handrail and Megaphone	52–54
Index (Numerical)	61-71
Mudguard, Chainguard, Oil Tank, Silencers and Rear Brake Control	44–48
Petrol Tank, Handlebar, Mudguards, Toolbox and Dual Seat	48–52
Pistons (Standard and Oversize)	58
Rear Hub and Wheel Fittings	42–44
Rear Suspension	34–36
Spares, Repairs and Guarantee	4
Stockists	5–9
Tools and Sundries	55

SUFFIX NUMBERS TO BE USED TO IDENTIFY VARYING FINISHES FOR GOLD STAR MODELS.

/1 Cadmium	/6 Rustproof Black
/2 Dull Chrome	/7 Black Enamel
/3 Bright Chrome	/19 Matt Silver aud Chrome, Lined Red
/21 Polished Aluminium	

When ordering components with varying finishes—*i.e.*, Petrol Tanks, Wheel Rims, Chainguards etc.,—Please state finish required by adding the appropriate suffix number to the part number.

EXAMPLE Gold Star Petrol Tank

Matt Silver and Chrome, Lined Red 42–8054/19

SPARKING PLUGS

Champion Sparking Plugs Limited, Feltham, Middlesex.

ELECTRICAL EQUIPMENT

J. Lucas Limited, Great King Street, Birmingham.

SPEEDOMETERS

Smith's Motor Accessories, Cricklewood Works, London.

SPARES

Please carry out the following in order to ensure prompt attention and correct execution of orders.

2. When ordering parts the frame and engine numbers must be quoted. The former will be found stamped on the seat or the head tube lug and the latter on the nearside of the crankcase immediately below the cylinder base. It is essential that the component numbers of the parts required be clearly stated.
IMPORTANT.—In quoting engine and frame numbers the full numbers including prefix letters, MUST BE GIVEN.

B.S.A. Motor Cycles Ltd. reserve the right to alter the designs or any constructional details of their manufactures at any time without giving notice.

COPY OF B.S.A. MOTOR CYCLE SPARE PARTS GUARANTEE

We give the following guarantee with B.S.A. Motor Cycle Spare Parts, instead of the guarantee implied by statute or otherwise, as to the quality or fitness of such parts for the purpose for which they are intended, any such implied guarantee being in all cases excluded, nor can any claim for consequential damages be entertained.

WE GUARANTEE, subject to the conditions mentioned below, that all precautions which are usual and reasonable have been taken by us to secure excellence of materials and workmanship, but this guarantee is to extend and be in force for six months only from the date of purchase, and the damages for which we make ourselves responsible under this guarantee are limited to the replacement of any part which may have proved defective.

WE UNDERTAKE, subject to the conditions mentioned below, to make good at any time within six months any defects in these respects. As motor cycles are easily liable to derangement by neglect or misuse, this guarantee does not apply to defects caused by wear and tear, misuse, or neglect. The term "misuse" shall include among others the following acts: The attaching of a sidecar to the motor cycle in such a manner as to cause damage or calculated to render the latter unsafe when ridden; the use of a motor cycle or a motor cycle and sidecar combined when carrying more persons or a greater weight than they were designed to bear.

CONDITIONS OF GUARANTEE

We do not guarantee the specialities of other firms, such as tyres, electrical equipment, saddles, etc., or of any component part supplied to the order of the purchaser differing from our standard specifications, whether supplied with our motor cycles or otherwise.

B.S.A. OVERSEAS DISTRIBUTORS

ADEN	Arabian Trading Co., Maalla Garage, Aden.
AFGHANISTAN	Levetus Ltd., 194, Bishopsgate, London, E.C.2.
ALASKA	Hap Alzina, 307, Broadway, Oakland 11, California.
ALGERIA	
ARGENTINA ...	Ditlevsen & Cia Ltda., Av. Ingeniero. Huergo 1335, Buenos Aires.
AUSTRALIA	
South Australia ...	J. N. Taylor & Co., 121/5, Grenfell St., Adelaide.
Victoria	Finlay Bros. (Pty) Ltd., 316/20 Elizabeth St., Melbourne C.1.
West Australia ...	Mortlock Bros., 914, Hay Street, Perth.
N.S.W. and Queensland ...	Bennett & Wood (Pty) Ltd., Cor., Bathurst and Pitt Sts., Sydney.
Tasmania ...	Sim King (Pty) Ltd. (Box A. 240G G.P.O.), 63, Brisbane Street, Launceston.
AUSTRIA	A.u.R. Hinteregger, Johnstrasse 31, Vienna XV.
AZORES	Hayes & Travell Ltd., P.O. Box 56, Ponta Delgada, St. Michael's.
BAHAMAS	Nassau Bicycle Co., P.O. Box 191, Nassau.
BAHREIN	United Commercial Agencies, P.O. Box 166, Bahrein Islands, Persian Gulf.
BELGIAN CONGO.	
Albertville ...	La Sima S.C.R.L., P.O. Box 671, Elizabethville.
Bukavu	Touriel Motors, P.O. Box 796, Bukavu.
Coquilhatville ...	Solbena S.C.R.L., P.O. Box 624, Leopoldville.
Elizabethville ...	La Sima, Boite Postale 671, Elizabethville.
Leopoldville ...	Solbena S.C.R.L., P.O. Box 624.
Usumbura ...	Capelluto Touriel & Co., P.O. Box 501, Usumbura, Ruanda Urundi.
Stanleyville ...	Nassers Trading Co. Ltd., P.O. Box 71.
BELGIUM	Famo S.A., 571, Grande Chaussée, Berchem, Antwerp.
BERMUDA	Holmes, Williams & Purvey, Ltd., P.O. Box 444, Pembroke.
BOLIVIA	Balfour Williamson Merchant Shippers Limited 7, Gracechurch St., London, E.C.3, operating through: Gibbs Williamson (Bolivia) Ltda., Casilla 957, La Paz.
BORNEO.	
Br. N. Borneo ...	Harrisons & Crosfield (Borneo) Ltd., Import Dept., Jesselton.
Sarawak	The Borneo Co. Ltd. (P.O. Box 141), Thomson Road, Kuching.
BOUGAINVILIE ...	Bennett & Wood Pty. Ltd., Corner Pitt and Bathurst Streets, Sydney, N.S.W. Australia.
BRAZIL	Mesbla S.A., Rua de Passeio 48/54, Rio de Janeiro.
and branches at ...	Sao Paulo (Est. de Sao Paulo)—Rua 24 de Maio, 141.
	Porto Alegre (R.G. do Sul)—Rua Voluntarios de Patria 524.
	Belo Horizonte (Minas Gerais)—Rua Curitiba, 444-464.
	Recife (Pernambuco)—Rua da Palma 251'
BRAZIL	Pelotas (R.G. do Sul)—Praca Cel. P. Osorio, 152-154.
	Niteroi (Est. do Rio)—Rua Visconde Rio Branco 521-523.
	Marilia (Sao Paulo)—Rua 9 de Julho 1001.
	Victoria (Espirato Santo)—Av. Victoria 719-727
	Salvador (Bahia)—Av. Frederico Pontes, 102-104.
BRITISH E. AFRICA.	
Kenya	Uganda Co. (Africa) Ltd., P.O. Box 1, Kampala, Uganda.
Tanganyika ...	International Motor Mart, P.O. Box 409, Dar-es-Salaam.
Uganda	The Uganda Co. (Africa) Ltd., P.O. Box 1, Kampala.
Zanzibar	Musa Jusabani, P.O. Box 366, Zanzibar.
BRITISH GUIANA	Bookers Stores Ltd., 49/53, Water St., Georgetown.
BRITISH HONDURAS	C. Melhado & Sons, Belize.
BRITISH SOMALILAND	Arabian Trading Co., Berbera
BRITISH W. AFRICA.	
Gambia	Cie. F.A.O., Bathurst.
Gold Coast ...	Cie. F.A.O., P.O. Box 70, Accra.
Nigeria	Cie. F.A.O., P.O. Box 160, Lagos
Sierra Leone ...	Cie. F.A.O., Freetown.
	(and other branches throughout territory)
BRITISH W. INDIES	
Antigua	Stephen R. Mendes Ltd., Colonial House, 18, Thames St., St. John's
Barbados	Redman & Taylors Garage Ltd., P.O. Box 269, Church Street, Bridgetown.
Dominica	A. C. Shillingford & Co., P.O. Box 123, The Garage, Roseau.
Grenada	Glean's Garage, St. Patricks.
Jamaica	B.S.A. Agency Ltd., 9, King Street, Kingston.
St. Kitts	J. W. Thurston & Co. Ltd., Fort St., Basseterre.
St. Lucia	Peter & Co, Castries.
Montserrat ...	M. S. Osborne, Trescellian House.
Nevis	J. W. Thurston & Co. Ltd., Fort St., Basseterre, St. Kitts.
St. Vincent ...	The Caribbean Trading Co., P.O. Box 27, Kingstown.
Trinidad	Sports & Games Ltd. (P.O. Box 271), 19, Henry Street, Port of Spain.
BURMA	Levetus Limited, 194, Bishopsgate, London, E.C.2, operating through: Fairweather Richards & Co. Ltd., 67/69, Lewis St., Rangoon.
CANADA.	
British Columbia and Alberta	Fred Deeley Ltd., 606, E. Broadway Ave., Vancouver.
Newfoundland ...	Edwin Murray Ltd., 256, Water Street, St. John's.
Nova Scotia ...	British Car Sales Ltd., Cor. North Park & Cornwallis Sts., Halifax.
Ontario	Brown's Sports & Cycle Co. Ltd., 343, Yonge St., Toronto.
Quebec	Arlington Cycle & Sports Ltd., 1194, University St., Montreal.
Saskatchewan ...	Nicholson Bros., 245, Second Ave. North, Saskatoon.

CANARY ISLANDS	J. Gonzales Suarez, (Apartado, No.9), Puerto de la Luz, Las Palmas.
CEYLON	Cargills (Ceylon) Ltd., Fort, Colombo.
CHILE	Balfour Williamson Merchant Shippers Limited, 7, Gracechurch St., London, E.C.3, operating through: Williamson Balfour & Co. S.A. Blanco 759, Valparaiso.
COOK ISLANDS ...	United Island Traders Ltd. (W. H. Watson), Raratonga.
COLOMBIA ...	Balfour Williamson Merchant Shippers Limited, 7, Gracechurch St., London, E.C.3, operating through: Tracey & Co. S.A., Apartado 1196, Bogota.
COSTA RICA ...	Tiberio Paganella, Ciclo Sport La Casa del Ciclista, Apartado 2321, San Jose.
CUBA	Distribudora de Motocicletas Bricanicas, S.A. Padre Varela, Havana, Cuba.
CYPRUS	B. C. Petrides & Co., P.O. Box 91, 7, Kyrenia Street, Nicosia.
CYRENAICA ...	Metcalfe Eng. Co. Ltd., P.O. Box 216, Benghazi.
CZECHOSLOVAKIA	Gorma Ltd, 70, Pall Mall, London S.W.1.
DENMARK	B.S.A. Motors & Cycles (H. V. Hansen) Vesterbrogade 101, Copenhagen.
DOMINICAN REBUPLIC	General Sales Co. Apartado 746 Ciudad Trujillo, R.D.
DUTCH GUIANA...	The New Motor Supply & Importing Co. (P.O. Box 422), Watermolen St., Paramaribo.
ECUADOR	Balfour Williamson Merchant Shippers Limited, 7, Gracechurch St., London, E.C.3, operating through: Soc. Com. Anglo-Ecuatoriana Lda. S.A., Apartado 410, Guayaquil.
EGYPT	T. W. M. Forsyth, 7 Sharia Maspero, Cairo.
ERITREA	Arabian Trading Co., Asmara.
ETHIOPIA	Arabian Trading Co. (P.O. Box 23), 155, Cunningham Street, Addis Ababa.
FALKLAND ISLANDS	McAtasney & Sedgwick, Falkland Store, Stanley.
FIJI	Morris Hedstrom Ltd., Suva.
FINLAND	S. & N. Osakeyhtio, Alexsanterinkatu 21A, Helsinki.
FRANCE	Movea S.A., 79, Ave. de la Grande Armée, Paris XVIe.
FR. ANTILLES	
Guadeloupe ...	Maison F. D'Alexis 44, Rue Frebault, Pointe-a-Pitre.
FRENCH EQ. AFRICA	The United Africa Co., Unilever House Blackfriars, E.C.4.
FRENCH INDIA ...	Levetus Ltd., 194, Bishopsgate London, E.C.2.
FRENCH INDO CHINA	Movea S.A., 79. Ave. de la Grande Armée, Paris XVIe, France.
FRENCH MOROCCO	African and Eastern (Near East) Ltd., P.O. Box 519, Casablanca.
FRENCH SOMALILAND	Arabian Trading Co., Djibouti.
FRENCH W. AFRICA	
Dahomey	Cie. F.A.O., Service Autos, Cotonou.
French Cameroons	Cie. F.A.O., Duala.
Ivory Coast ...	Cie. F.A.O., Abidjan.
Mauritania ...	The United Africa Co., Unilever House, Blackfriars, E.C.4.
French Guinea ...	Cie. du Niger Français, Conakry
French Sudan ...	Cie. du Niger Français, Bamako.
Senegal	Nouvelle Societé Commerciale Africaine, 31 Boulevard Pinet-Laprade, Dakar.
GERMANY (West)...	Aschoff & Co., C.M.B.H. Oppumer Strasse 67/69, Krefeld.
(East)...	Gorma Ltd., 70, Pall Mall, London, S.W.1.
GIBRALTAR ...	F. G. Bado, 16, Main St.
GILBERT and ELLICE ISLANDS	Morris Hedstrom Ltd., Apia, Samoa.
GREECE	D. F. Papoutsas, 56, Chalcocondillis St., Athens.
GUADELOUPE ...	Maison F. D'Alexis, 44, Rue Frebault, Pointe-à-Pitre.
GUATEMALA ...	H. J. Nicol & Co. S.C., 8A Avenida Sur No. 109, Guatemala City.
HADRAMUT ...	Arabian Trading Co., Esplanade Aden.
HAITI	Valles & Bajeux, Grande Rue 185, (P.O. Box 856), Port-au-Prince.
HAWAII ISLANDS	Schubert's Cyclery Stores (P.O. Box 3443), Cor. Archer and South King Sts., Honolulu, Hawaii.
HONDURAS ...	M. Liebers, Apartado 51, Tegucigalpa, D.C.
HONG KONG ...	Levetus Limited, 194, Bishopsgate London, E.C 2, operating through: British Bicycle Co., 16, Hennessy Road.
HUNGARY	Gorma Ltd., 70, Pall Mall, London S.W.1.
ICELAND	Falkinn Ltd., P.O. Box 997, Rejkjavik.
INDIA	Levetus Limited., 194, Bishopsgate, London, E.C.2., and branches in Delhi, Bombay and Calcutta, operating through:
Bombay	Noble Cycle & Motor Co., 225, Hornby Rd., Fort, Bombay.
Calcutta	Bentinck Cycle Co., 1/2, Chowringhee Rd., Calcutta.
Jullundur ...	Janki Dass & Sons, Main Street, Jullundur.
Madras	Union Co. (Motors) Ltd., Mount Rd. Madras.
Delhi	Tandon Bros., 16, Daryaganj, Delhi 7.
New Delhi ...	Peary Lal & Sons Ltd., Queen's Way, New Delhi.
Delhi	Peary Lal & Sons (E. Punjab) Ltd., Peary Lal Bldg., Kashmere Gate, Delhi 6.
Allahabad... ...	Colonelganj Cycle & Motor Agency, 12 P.D. Tandon Rd., Allahabad.
Ambala	B. K. Mittal & Co., Staff Rd., Ambala, Cantt.
Kanpur	Calcutta Motor & Cycle Co., 26/51, Birhani Rd., Kanpur.
Cuttack	Pearl Cycle Stores, Naya Serak, Cuttack.
Lucknow	Motor Cycle House, 11, Station Rd., Lucknow.

INDIA	
Nagpur	Bombay Cycle Stores Co. Ltd., Mahal, Nagpur City.
Ranchi	Kedia Cycle Stores, Main Rd., Ranchi.
Jamnagar ...	Imperial Trading Co., Ranjit Rd., Jamnagar.
Meerut	Mittal Bros., Bombay Bazaar, Meerut.
Hyderabad ...	Sohrab Bros., Hyderabad—DN.
INDONESIA ...	Handelmaatschappij L. Platon N.V., Postrommel Dak 776, Djakarta-Kota.
IRAQ	Mr. J. A. Noury, 2/111, Rashid Street, Baghdad, Iraq.
IRISH REPUBLIC	Huet Bros. Ltd., 7 & 8, Bachelor's Walk, Dublin, C.9.
ISRAEL	S. Gousman & Son, 16, Hakishon St., Tel-Aviv.
ITALIAN SOMALILAND	Arabian Trading Co., Esplanade, Aden.
ITALY	A. di Palma, Via Cenisio 4, Milan.
JAPAN	Balcom Trading Co. Inc., Japan Red Cross Bldg. Annexe, 5-1 Shiba Park, Minatu-Ku, Tokio.
KOREA	Balcom Trading Co. Inc., Japan Red Cross Bldg. Annexe, 5-1, Shiba Park, Minatu-Ku, Tokio.
KUWAIT	Abdul Rahman Albisher & Zaid Alkazemi, Kuwait, Persian Gulf.
LEBANON	Associated Commercial Enterprise, P.O. Box 3270, Air Moureisseh, Beirut.
LEICHENSTEIN ...	Fibag, Postfach Zurich 39, Zurich Switzerland.
LIBERIA	Cie. F.A.O., Monravia.
LIBYA	
Tripolitania ...	Fili Pagani Soc. Coll. 113, Sciara Mizran, Tripoli.
Cyrenaica ...	Metcalf Eng. Co. Ltd., P.O. Box 216, Benghazi.
LUXEMBOURG ...	Famo S.A., 571 Grande Chaussée, Berchem, Antwerp, Belgium.
MADAGASCAR ...	Movea, S.A., 79 Ave. de la Grande Armée, Paris XVIe, France.
MADEIRA	A. Gomez Loja, P.O. Box 52, Funchal.
MALAYA	Cycle & Carriage Co. (1926) Ltd. (P.O. Box 305), Orchard Road Singapore.
MALTA	G. Anastasi, 27 and 35 opp. St. John's Church, Valletta.
MAURITIUS ...	Lising & Co., 32, Royal St., Port Louis.
MEXICO	Watson Phillips & Cia. Succs. S.A., Apartado Postal No. 67, Mexico 6 D.F.
	Alejandro Dominguez, Calle 60, Num. 536, Merida, Yucatan.
NETHERLANDS ...	Hart Nibbrig & Greeve N.V., Parkstraat 91A, The Hague.
NETHERLANDS ANTILLES (D.W.I.)	Caribbean Sales (P.O. Box 43), Noordstraat No. 543, Orangestad, Aruba.
	Caribbean Sales, P.O. Box 135 Willemstad, Curacao.
NEW BRITAIN ...	Bennett & Wood Pty. Ltd., Corner Pitt and Bathurst Streets, Sydney, N.S.W. Australia.
NEW CALEDONIA	Agence Automobile, Avenues de Maréchal Foch et de la Victoire, Nouméa.
NEW GUINEA	Bennett & Wood Pty. Ltd., Corner, Bathurst and Pitt Streets, Sidney, N.S.W,. Australia.
NEW HEBRIDES ...	Bennett & Wood Pty. Ltd., Corner Pitt and Bathurst Streets, Sydney, N.S.W. Australia.
NEW IRELAND ...	Bennett & Wood Pty. Ltd., Corner Pitt and Bathurst Streets, Sydney, N.S W. Australia.
NEW ZEALAND ...	Skeates & White Ltd., 48, Fort St., Auckland, C1.
NICARAGUA ...	J. A. Estrada & Cia. Ltda., (Apartado No. 11), Avenida Roosevelt, Managua.
NORWAY	Erling Sande, Grubbegaten 2/4, Oslo.
NYASALAND ...	African Lakes Corp. Ltd., Mandala, Blantyre.
OKINAWA	Balcom Trading Co. Inc. Japan Red Cross Bldg. Annexe, 5-1, Shiba Park, Minatu-Ku, Tokyo.
PAKISTAN ...	Levetus Ltd., 194, Bishopsgate, London, E.C.2, and their branches at Karachi and Dacca, operating through:
(WEST)	Shahnawaz Ltd. (P.O. Box 655), Victoria Rd., Karachi.
(EAST)	Crescent Cycle & Motor Co., 161, Nawabpur Rd., Dacca.
PANAMA	Panamusica S.A., P.O. Box 3227. Panama.
PAPUA	Bennett & Wood Pty. Ltd., Corner Pitt and Bathurst Streets, Sydney, N.S.W. Australia.
PARAGUAY ...	J. & F. Perez, 14 de Mayo Pte Franco, Asuncion.
PERSIA	H. Mohammed Tavakolipoor, Ave. Boozarjomehri, Tehran.
PERU	Balfour Williamson Merchant Shippers Limited, 7, Gracechurch St., London, E.C.3, operating through:
	Milne & Co. S.A., Apartado 684, Lima.
PHILLIPINES ...	Campos Rueda & Sons, 421/7, Juan Islands, Manilla.
POLAND	Gorma Ltd., 70, Pall Mall, London, S.W.1.
PORTUGAL (North)	Silva Neto & Ca., Anadia.
(South)	Stand Vidal, Travessa de S. Mamede 23/5, Lisbon.
PORTUGUESE EAST AFRICA	F. L. Simoes & Co., P.O. Box 13, Beira.
	A. A. Azevedo, P.O. Box 482, Lourenco Marques.
	Gordhandas Valabhdas & Filhos, P.O. Box 45, Mozambique.
	Anto Sobressalentes Ltd., P.O. 206, Quelimane.
PORTUGUESE WEST AFRICA	Casa Americana Ltda, Caixa Postal 1208, Luanda.
PORTUGUESE GUINEA	Nunes & Irmao, C.P. 83, Bissau.
PORTUGUESE INDIA	M.S.B. Caculo, Nova Goa.
PUERTO RICO ...	M. Castro Fernandez & Co. Ltd. (P.O. Box 1579), San Juan 7, Puerto Rico.
REUNION ISLES...	Movea S.A., 79, Avenue de la Grande-Armee, Paris XVIe, France.
RHODESIA (NORTHERN)	Central African Motors Ltd., P.O. Box 1905, N'dola, Northern Rhodesia.
	Pais Motors, P.O. Box 51, Lusaka, Northern Rhodesia.
	The British Cycle & Sports Co., P.O. Box 274, Livingstone.

RHODESIA (SOUTHERN)
Van Rooyen Motor Cycle Works Ltd. 124, Gray St., Bulawayo, Southern Rhodesia.
Alick Stuart Ltd., P.O. Box 306, Bulawayo, Southern Rhodesia.
Kimpton's (Midlands) Ltd., P.O. Box 91, Gwelo.
Gammon Bros., P.O. Box 151, Umtali.
Johnstons Motor Supplies, 28, Pioneer St., Salisbury.
Umtali Cycle Co., P.O. Box 149, Umtali,.

ROUMANIA ... Gorma Ltd., 70, Pall Mall, London, S.W.I.

SALVADOR... ... La Agencia Nacional Ltda., San Salvador.

SAMOA ... ... Morris Hedstrom Ltd., Apia.

SARAWAK ... ... Borneo Co. Ltd., Sackville House, Fenchurch Street, E.C.3.

SAUDI ARABIA ... Ebrahim Abdullah Juffali & Bros., P.O. Box 297, Jeddah.

SEYCHELLES ... Chenard & Co., P.O. Box 5, Mahe.

SOLOMON ISLANDS
Bennett & Wood Pty. Ltd., Corner Pitt and Bathurst Streets, Sydney, N.S.W. Australia.
Morris Hedstrom Ltd., Apia, Samoa.

SOUTH W. AFRICA Terry's Motors, P.O. Box 784, Windhoek.

SPAIN ... ... Commercial Yacobi, Jose Antonio 45, Madrid.

SPANISH GUINEA J. Gonzalez Suarez, (Apartado No.9), Puerto de la Lnz, Las Palmas, Canary Islands.

SPANISH MOROCCO
Marrache & Levy, (P.O. Box 132), Casa Riera 26/28, Tangier, Tangiers.

SUDAN ... ... Geo. Djerdjian & Sons, P.O. Box 364, Khartoum.

SWEDEN ... ... A-B. E. Fleron, Malmo.

SWITZERLAND ... Fibag, Postfach Zurich 39, Zurich.
Van Leisen S.A., 34, Rue de la Synagogue, Geneva.

SYRIA ... ... M. Chafik Khiami & Co., Rue el Nasr 169, Damascus, Syria.

TAHITI ... ... H. Jean Hamon, Papeete.

TANGIERS ... Marrache & Levy, (P.O. Box 132), Casa Riera 26/28, Tangier.

THAILAND ... Triangle Co. Ltd., (P.O. Box 70), Asdang Rd., Bangkok.

TONGA ... ... E. H. Jones, P.O. Box 34, Nukualofa, Tonga Islands.

TRIPOLITANIA ... Filli Pagani Soc. Coll., 113, Sciara Mizran, Tripoli, Libya.

TUNISIA ... ... Etabs. Jean Borg, 35, Rue de Marseille, Tunis.

TURKEY ... ... Turkish Automobile Trade Co., Beyoglu Istiklal Caddesi 239, (P.O. Box 2032), Istanbul

UNION OF SOUTH AFRICA.

Cape Province ... Robb Motors (Pty) Ltd., 102 Strand St., Cape Town.
Barnes Garage Ltd., P.O. Box 438, East London.
The Union Cycle Works, P.O. Box 442, Kimberley.
Sahds, P.O. Box 149, Queenstown.
Haigh Motors (Pty) Ltd., P.O. Box 1160, Port Elizabeth.

Natal ... ... S. & W. Killerby, 469, Smith St., Durban.
Percy Briggs (Pty.) Ltd., P.O. Box 564, Durban.
Jowett Bros., P.O. Box 201, Pietermaritzburg.

Orange Free State E. Hoehne & Co., P.O. Box 619, Bloemfoentein.

Transvaal ... Fisher & Simmons Ltd., 12, Albert Street, Johannesburg.
Shimwell Bros. (Pty) Ltd., P.O. Box 2035, Johannesburg, also at P.O. Box 95, Pretoria.

UNITED STATES OF AMERICA.

East Coast ... B.S.A. Incorporated, 639, Passaic Ave., Nutley 10, New Jersey.

West Coast ... Hap Alzina, 3074 Broadway, Oakland 11, California.

URUGUAY ... ... Linn & Cia. S.A., Casilla Correo 1027, Montevideo.

VENEZUELA ... Agencias B.S.A. de Venezuela C.A., Salvador de Leon a Socarras 52, Caracas.
Rafael E. Montero, Calle Soledad, 73, Maracaibo, Zulia. (Districts of Zulia and Falcon.)

YEMEN .. ... Arabian Trading Co., Esplanade, Aden.

YUGOSLAVIA ... Gorma Ltd., 70, Pall Mall London S.W.I.

STANDARD BOLTS. All Bolts are C.E.I. unless otherwise stated.

Part No.	Length under Head.	Thickness of Head.	Length of Thread.	Across Flats.	Diameter.
2–14	1 1/32″	3/16″	13/16″	.440″ Hex.	1/4″
2–204	1/2″	3/16″	1/2″	.440 Hex.	1/4″
2–220	3/8″	3/16″	3/8″	.440″ Hex.	1/4″
2–1354	.641″	.187″	.641″	.440″ Hex.	1/4″
2–1402	7/8″	1/8″	3/8″	.440″ Hex.	1/4″
2–2273	7/16″	5/32″	3/8″	.440″ Hex.	1/4″
24–225	.750″	.187″	3/8″	.440″ Hex.	1/4″
1–5069	.625″	.187″	.625″	.525″ Hex.	5/16″
2–129	.750″	.250″	.625″	.440″ Hex.	5/16″
2–1934	.750″	.156″	.625″	.440″ Hex.	5/16″
2–6026	1.187″	.156″	.625″	.440″ Hex.	5/16″
15–480	1.109″	.250″	.781″	.525″ Hex.	5/16″
15–1355	1.500″	.218″	.625″	.525″ Hex.	5/16″
15–7354	.625″	.156″	.625″	.440″ Hex.	5/16″
27–6311	.750″	.125″	.625″	.440″ Hex.	5/16″
28–2338	.718″	.218″	.687″	.525″ Hex.	5/16″
24–649	.877″	.187″	.877″	.594″ Hex.	3/8″
65–4185	2.687″	.250″	.750″	.504″ Hex.	3/8″

All Bolts are C.E.I. (Screwdriver slotted) unless otherwise stated.

Part No.	Length under Head.	Thickness of Head.	Length of Thread.	Across Head.	Diameter.
1–4606	.500″	.125″	.500″	.312″	3/16″
2–360	.406″	.078″	.406″	.312″	3/16″
2–498	.312″	.062″	.312″	.312″	3/16″ Whit.
2–1309	.343″	.062″	343″	.312″	3/16″
2–2582	.343″	.125″	.343″	.250″	3/16″ Whit.
24–7065	.250″	.062″	.250″	.312″	3/16″
2–77	.312″	.062″	.312″	.375″	1/4″
2–79	.500″	.109″	.500″	.375″	1/4″
2–510	.656″	.093″	.375″	.375″	1/4″
2–1500	.687″	.109″	.375″	.375″	1/4″
2–2210	.718″	.062″	.562″	.562″	1/4″
2–2378	.656″	.109″	.656″	.375″	1/4″
15–7161	.500″	.125″	.312″	.500″	1/4″
2–2980	1.25″	.93″	.625″	.562″	5/16″

STANDARD NUTS. All Nuts are C.E.I. unless otherwise stated.

Part No.	Across Flats.	Thickness.	Size.
1–4616	.340″ Hex.	.162″	3/16″
2–47	.312″ Hex.	.140″	3/16″
2–1588	.255″ Hex.	.110″	3/16″
15–8147	.340″ Hex.	.125″	3/16″
25–7151	.340″ Hex.	.187″	3/16″
1–6032	.340″ Hex.	3/16″	1/4″
2–51	.440″ Hex.	.250″	1/4″
2–53	.440″ Hex.	.109″	1/4″ Whit.
2–443	.440″ Hex.	.109″	1/4″
2–1027	.340″ Hex.	1/8″	1/4″
2–2395	.440″ Hex.	.187″	1/4″
2–49	.525″ Hex.	.218″	5/16″
2–833	.440″ Hex.	.343″	5/16″
2–1616	.440″ Hex.	.125″	5/16″
15–5196	.525″ Hex.	.281″	5/16″
15–6524	.525″ Hex.	.175″	5/16″
24–563	.440″ Hex.	.187″	5/16″
24–6040	.525″ Hex.	.156″	5/16″
1–1706	.594″ Hex.	.250″	3/8″
2–46	.594″ Hex.	.312″	3/8″
2–1813	.594″ Hex.	.218″	3/8″
3–720	.594 Hex.	.187″	3/8″
24–5161	.594″ Hex.	.343″	3/8″
24–5764	.782″ Hex.	.312″	3/8″
2–440	.594″ Hex.	.312″	7/16″
2–933	.525″ Hex.	.375″	7/16″
2–1925	.782″ Hex.	.375″	7/16″
15–152	.592″ Hex.	.406″	7/16″
15–541	.782″ Hex.	.281″	7/16″
24–5860	.594″ Hex.	.187″	7/16″
25–4325	.919″ Hex.	.540″	7/16″
2–52	.919″ Hex.	.406″	1/2″
2–124	.782″ Hex.	.203″	1/2″
24–7000	.782″ Hex.	.250″	1/2″
27–6716	.782″ Hex.	.187″	1/2″
2–835	.919″ Hex.	.375″	9/16″
15–1455	.782″ Hex.	.218″	9/16″
24–4255	.919″ Hex.	.187″	9/16″
28–53	.782″ Hex.	.344″	9/16″

ENGINE

Gold Star 350c.c., 500c.c. Clubmans and Road Racing.

Plate Ref. Number.	Model.	Part No.	Description.	Number per set.
1	350c.c., 500c.c.	65–1854	Valve rocker fulcrum pin	2
2	350c.c., 500c.c.	31–8430	Rocker oil feed pipe banjo washer (fibre)	2
3	350c.c., 500c.c.	42–46	Rocker oil feed pipe complete	1
4	350c.c., 500c.c.	65–317	Rocker oil feed pipe banjo screw (inlet)	1
5	350c.c., 500c.c.	65–318	Rocker oil feed pipe banjo screw (exhaust)	1
6	350c.c., 500c.c.	66–8338	Rocker oil feed pipe connection (rubber)	2
7	350c.c., 500c.c.	65–1855	Valve rocker fulcrum pin cord ring	2
8	350c.c., 500c.c.	2–443	Exhaust lifter spindle nut	1
9	350c.c., 500c.c.	2–525	Exhaust lifter spindle washer	1
10	350c.c., 500c.c.	66–1431	Exhaust lifter lever	1
11	350c.c., 500c.c.	65–403	Exhaust lifter spindle spring	1
12	350c.c., 500c.c.	65–1118	Valve rocker fulcrum pin washer	2
13	350c.c., 500c.c.	65–1117	Valve rocker fulcrum pin spring	2
14	350c.c., 500c.c.	65–1852	Valve rocker (inlet)	1
15	350c.c., 500c.c.	65–402	Exhaust lifter spindle washer	1
16	350c.c., 500c.c.	65–1853	Valve rocker (exhaust)	1
17	350c.c., 500c.c.	65–1857	Valve rocker fulcrum thrust washer	2
18	350c.c., 500c.c.	65–1137	Exhaust lifter	1
19	350c.c., 500c.c.	2–443	Exhaust lifter spindle nut	1
20	350c.c., 500c.c.	2–525	Exhaust lifter washer	1
21	350c.c., 500c.c.	35–701	Exhaust lifter split pin	1
22	350c.c., 500c.c.	65–1165	Exhaust lifter spindle	1
23	350c.c., 500c.c.	2–2894	Exhaust lifter bush washer (fibre)	1
24	350c.c., 500c.c.	65–387	Exhaust lifter bush	1
25	350c.c., 500c.c.	65–401	Exhaust lifter spindle washer (felt)	1
26	350c.c., 500c.c.	65–1163	Exhaust lifter cable holder	1
27	350c.c., 500c.c.	2–443	Exhaust lifter cable holder nut	1
28	350c.c., 500c.c.	65–1839	Rocker box	1
29	350c.c., 500c.c.	65–1590	Rocker box inspection cover joint washer	1
30	350c.c., 500c.c.	65–1589	Rocker box inspection cover	1
31	350c.c., 500c.c.	2–49	Rocker box stud nut	9
32	350c.c., 500c.c.	24–8784	Rocker box stud washer (spring)	9
33	350c.c.	65–1843	Valve (exhaust)	1
33	500c.c.	65–1845	Valve (exhaust)	1
34	350c.c., 500c.c.	65–1851	Valve spring insulating washer	1
35	350c.c., 500c.c.	65–1596	Valve guide (exhaust)	1
36	350c.c., 500c.c.	65–1847	Valve spring collar (exhaust)	1
37	350c.c., 500c.c.	65–1849	Valve spring split cotter (exhaust) (halves)	2
38	350c.c.	42–2801	Exhaust pipe	1
38	500c.c.	42–2805	Exhaust pipe	1
39	350c.c., 500c.c.	15–39	Valve rocker fulcrum pin washer	2
40	350c.c., 500c.c.	65–1856	Valve rocker fulcrum pin nut	2
41	350c.c.	65–1802	Cylinder head with fixed fittings	1
41	500c.c.	65–1805	Cylinder head with fixed fittings	1
42	350c.c., 500c.c.	65–1591	Cylinder head and rocker box stud (long)	3
43	350c.c., 500c.c.	65–1587	Rocker box joint washer (tower)	1
44	350c.c., 500c.c.	65–1588	Rocker box joint washer	2
45	350c.c., 500c.c.	65–1592	Cylinder head and rocker box stud (short)	6
46	350c.c., 500c.c.	66–102	Sparking plug washer	1
47	350c.c., 500c.c.	65–1341	Sparking plug	1
48	350c.c., 500c.c.	65–1776	Sparking plug waterproof cover	1
49	350c.c.	65–1842	Valve (inlet)	1
49	500c.c.	65–1844	Valve (inlet)	1
50	350c.c., 500c.c.	65–1519	Valve spring seat	2
51	350c.c., 500c.c.	65–1595	Valve guide (inlet)	1
52	350c.c., 500c.c.	65–1894	Valve spring (inner)	2
53	350c.c., 500c.c.	65–1895	Valve spring (outer)	2
54	350c.c., 500c.c.	65–1846	Valve spring collar (inlet)	1
55	350c.c., 500c.c.	65–1848	Valve spring split cotter (inlet) (halves)	2
56	350c.c.	65–2293	Piston complete with gudgeon pin, rings and circlips (C.R. 12.25 to 1)	*as reqd.*
57	350c.c.	65–490	Scraper ring	1
58	350c.c.	65–1621	Compression ring	2
59	350c.c.	65–2254	Piston complete with gudgeon pin, rings and circlips (C.R. 8 to 1)	1
59	350c.c.	65–2281	Piston complete with gudgeon pin, rings and circlips (C.R. 8.5 to 1)	*as reqd.*
59	350c.c.	65–2287	Piston complete with gudgeon pin, rings and circlips (C.R. 9 to 1)	*as reqd.*
60	350c.c.	65–2275	Piston complete with gudgeon pin, rings and circlips (C.R. 6.5 to 1)	*as reqd.*

Plate 1

ENGINE

350c.c. and 500c.c. Gold Star Clubmans and Road Racing

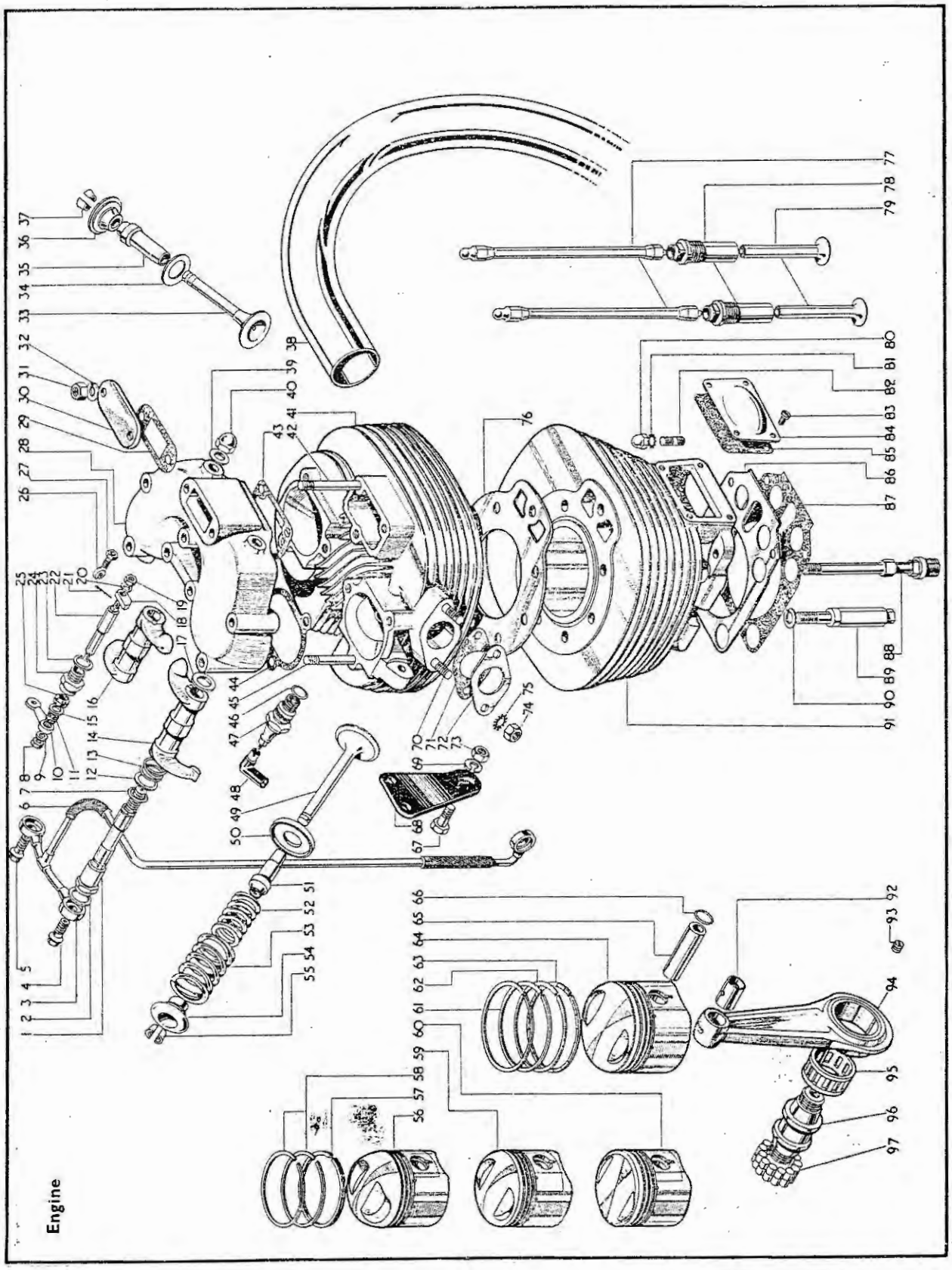

Plate 1—*continued.*

ENGINE

Gold Star 350c.c., 500c.c. Clubmans and Road Racing.

Plate Ref. Number.	Models.	Part No.	Description.	Number per set.
61	500c.c.	65–2266	Compression ring	2
62	500c.c.	65–2269	Scraper ring (top)	1
63	500c.c.	65–2272	Scraper ring (bottom)	1
64	500c.c.	65–2260	Piston complete with gudgeon pin, rings and circlips (C.R. 8.5 to 1)	1
64	500c.c.	65–2300	Piston complete with gudgeon pin, rings and circlips (C.R. 9 to 1)	*as reqd.*
64	500c.c.	65–2307	Piston complete with gudgeon pin, rings and circlips (C.R. 8 to 1)	*as reqd.*
65	350c.c.	65–440	Gudgeon pin	1
65	500c.c.	66–953	Gudgeon pin	1
66	350c.c., 500c.c.	66–954	Gudgeon pin retaining ring	2
67	350c.c., 500c.c.	15–480	Engine steady stay bolt	1
68	350c.c., 500c.c.	65–1890	Engine steady plate	1
69	350c.c., 500c.c.	24–8784	Engine steady stay bolt washer (spring)	1
70	350c.c., 500c.c.	29–565	Carburetter stud	2
71	350c.c.	65–1232	Carburetter flange washer (paper)	1
71	500c.c.	65–1417	Carburetter flange washer (paper)	1
72	350c.c.	67–933	Carburetter flange washer (tufnol)	1
72	350c.c.	65–1418	Carburetter flange washer (tufnol)	2
73	350c.c., 500c.c.	2–49	Engine steady stay bolt nut	1
74	350c.c., 500c.c.	2–49	Carburetter stud nut	2
75	350c.c., 500c.c.	36–382	Carburetter stud nut washer (shakeproof)	2
76	350c.c.	65–1817	Cylinder head gasket	1
76	500c.c.	65–1818	Cylinder head gasket	1
77	350c.c., 500c.c.	65–1858	Push rod complete	2
78	350c.c., 500c.c.	65–1875	Tappet guide (inlet and exhaust)	2
79	350c.c., 500c.c.	65–1876	Tappet (inlet and exhaust)	2
80	350c.c., 500c.c.	65–930	Cylinder barrel stud nut	2
81	350c.c., 500c.c.	29–541	Cylinder barrel stud washer (shakeproof)	2
82	350c.c., 500c.c.	24–4227	Cylinder barrel stud	2
83	350c.c., 500c.c.	29–2158	Push rod tappet recess cover screw	4
84	350c.c., 500c.c.	66–1936	Push rod tappet recess cover	1
85	350c.c., 500c.c.	66–1937	Push rod tappet recess cover joint washer	1
86	350c.c., 500c.c.	65–1650	Cylinder base shim (.010″)	*as reqd.*
86	350c.c., 500c.c.	65–1651	Cylinder base shim (.020″)	*as reqd.*
86	350c.c., 500c.c.	65–1652	Cylinder base shim (.030″)	*as reqd.*
86	350c.c., 500c.c.	65–1653	Cylinder base shim (.064″)	*as reqd.*
87	350c.c., 500c.c.	65–1582	Cylinder base washer	1
88	350c.c., 500c.c.	65–1840	Cylinder holding down bolt	5
89	350c.c., 500c.c.	65–1822	Cylinder head bolt (short)	3
90	350c.c., 500c.c.	2–2903	Cylinder head bolt washer (spring)	3
91	350c.c.	65–1810	Cylinder barrel with liner	1
91	500c.c.	65–1825	Cylinder barrel with liner	1
92	350c.c., 500c.c.	66–492	Connecting rod bush (small end)	1
93	350c.c., 500c.c.	65–479	Crankpin oil hole grub screw	1
94	350c.c., 500c.c.	65–1836	Connecting rod with bushes	1
95	350c.c., 500c.c.	66–506	Roller cage	1
96	350c.c., 500c.c.	65–1872	Crankpin	1
97	350c.c., 500c.c.	24–375	Crankpin roller	24

Plate 2

ENGINE

Gold Star 350c.c. 500c.c. Clubmans and Road Racing.

Plate Ref. Number.	Model.	Part No.	Description.	Number per set.
1	350c.c., 500c.c.	66–1677	Crankcase with fixed fittings (drive side)	1
2	350c.c., 500c.c.	15–1355	Crankcase connecting bolt	3
3	350c.c., 500c.c.	65–1397	Bearing retaining plate	1
4	350c.c., 500c.c.	65–1388	Roller bearing (drive side)	1
5	350c.c., 500c.c.	65–1386	Engine shaft distance collar (outer)	1
6	350c.c., 500c.c.	65–2240	Main bearing spring ring	1
7	350c.c., 500c.c.	65–2045	Ball bearing (drive side)	1
8	350c.c., 500c.c.	66–661	Engine shaft shim (drive side)	1
9	350c.c., 500c.c.	65–1874	Engine shaft distance collar	1
10	350c.c., 500c.c.	65–1438	Bearing retaining plate lockwasher	4
11	350c.c., 500c.c.	31–426	Bearing retaining plate bolt	4

ENGINE

Gold Star 350c.c. 500c.c. Clubmans and Road Racing

Plate Ref. Number.	Models.	Part No.	Description.	Number per set.
12	350c.c., 500c.c.	65–1870	Engine shaft (drive side)	1
13	350c.c.	65–1862	Flywheel with shaft assembled (drive side)	1
13	500c.c.	65–1866	Flywheel with shaft assembled (drive side)	1
14	350c.c., 500c.c.	66–630	Connecting rod thrust washer rivet	6
15	350c.c., 500c.c.	66–629	Connecting rod thrust washer	2
16	350c.c.	65–1864	Flywheel with shaft assembled (gear side)	1
16	500c.c.	65–1868	Flywheel with shaft assembled (gear side)	1
17	350c.c., 500c.c.	65–1327	Crankpin nut	2
18	350c.c., 500c.c.	2–77	Crankpin locking screw	2
19	350c.c., 500c.c.	24–722	Roller bearing (gear side)	1
20	350c.c., 500c.c.	65–696	Engine shaft driving pinion	1
21	350c.c., 500c.c.	65–693	Engine shaft driving pinion key	1
22	350c.c., 500c.c.	65–2157	Timing cover screw	9
23	350c.c., 500c.c.	65–1877	Timing cover	1
24	350c.c., 500c.c.	66–1920	Timing cover washer	2
25	350c.c., 500c.c.	66–1923	Oil feed washer (rubber)	2
26	350c.c., 500c.c.	66–2007	Cam pinion spindle bolt	2
27	350c.c., 500c.c.	36–382	Cam pinion spindle bolt washer (shakeproof)	2
28	350c.c., 500c.c.	66–2003	Timing gear plate complete	1
29	350c.c., 500c.c.	65–1871	Engine shaft (gear side)	1
30	350c.c., 500c.c.	27–1239	Engine shaft rivet	14
31	350c.c., 500c.c.	2–49	Crankcase connecting bolt nut	5
32	350c.c., 500c.c.	65–2425	Cam pinion spindle (inlet)	1
33	350c.c., 500c.c.	65–2426	Cam pinion spindle (exhaust)	1
34	350c.c.	65–1891	Exhaust cam pinion complete	1
34	500c.c.	65–2446	Exhaust cam pinion complete	1
35	350c.c., 500c.c.	65–441	Cam pinion bush	4
36	350c.c., 500c.c.	1–5069	Timing gear plate bolt	1
37	350c.c., 500c.c.	36–382	Timing gear plate bolt washer (shakeproof)	1
38	350c.c., 500c.c.	36–382	Timing gear plate bolt washer (shakeproof)	3
39	350c.c., 500c.c.	21–2902	Timing gear plate bolt (Whit.)	3
40	350c.c., 500c.c.	65–695	Engine shaft timing pinion lockwasher (shakeproof)	1
41	350c.c., 500c.c.	29–905	Engine shaft timing pinion nut	1
42	350c.c., 500c.c.	66–698	Engine shaft oil feed pipe	2
43	350c.c., 500c.c.	65–1884	Breather pipe	1
44	350c.c., 500c.c.	15–203	Breather pipe banjo washer	1
45	350c.c., 500c.c.	¼″ diam.	Oil valve spring ball	1
46	350c.c., 500c.c.	66–1684	Oil valve spring	1
47	350c.c., 500c.c.	66–1683	Oil valve spring retaining screw washer (fibre)	1
48	350c.c., 500c.c.	65–2188	Oil valve spring retaining screw	1
49	350c.c., 500c.c.	65–1887	Breather pipe banjo bolt	1
50	350c.c., 500c.c.	65–1882	Engine breather valve	1
51	350c.c., 500c.c.	65–1883	Engine breather valve spring	1
52	350c.c.	65–2444	Inlet cam pinion complete	1
52	500c.c.	65–2442	Inlet cam pinion complete	1
53	350c.c., 500c.c.	65–1174	Magdyno drive idler pinion complete	1
54	350c.c., 500c.c.	24–195	Magdyno driving pinion nut	1
55	350c.c., 500c.c.	2–2903	Magdyno driving pinion nut washer (spring)	1
56	350c.c., 500c.c.	65–1879	Magdyno driving pinion	1
57	350c.c., 500c.c.	65–2316	Magdyno driving pinion oil seal	1
58	350c.c., 500c.c.	65–2580	Oil pump driving spindle retaining pin	1
59	350c.c., 500c.c.	65–2618	Oil pump and crankcase joint washer	1
60	350c.c., 500c.c.	29–541	Crankcase scavenge cover stud nut washer (shakeproof)	4
61	350c.c., 500c.c.	2–51	Crankcase scavenge cover stud nut	4
62	350c.c., 500c.c.	65–2611	Crankcase scavenge cover	1
63	350c.c., 500c.c.	65–2612	Crankcase scavenge cover washer (oilproof)	2
64	350c.c., 500c.c.	65–2623	Oil pump filter	1
65	350c.c., 500c.c.	65–2604	Oil pump fixing bolt	2
66	350c.c., 500c.c.	24–978	Oil pump fixing bolt washer (spring)	2
67	350c.c., 500c.c.	65–2619	Oil pump complete	1
68	350c.c., 500c.c.	65–2336	Magdyno drive idler pinion bush	1
69	350c.c., 500c.c.	65–2335	Magdyno drive idler pinion spindle	1
70	350c.c., 500c.c.	36–3528	Magdyno drive idler pinion thrust washer	1
71	350c.c., 500c.c.	66–2620	Oil pump driving spindle	1
72	350c.c., 500c.c.	65–2600	Oil pump feed gear (driven)	1
73	350c.c., 500c.c.	31–222	Crankcase scavenge cover stud	4
74	350c.c., 500c.c.	65–2606	Oil pump tap plate washer	1
75	350c.c., 500c.c.	65–2598	Oil pump tap plate	1
76	350c.c., 500c.c.	65–2601	Oil pump feed gear (driver)	1
77	350c.c., 500c.c.	65–2596	Oil pump body	1
78	350c.c., 500c.c.	65–2599	Oil pump scavenge gear	2

Gearbox
Clutch and Front Chaincase
Frame and Fittings
Rear Suspension
Front Fork and Fittings
Front Hub and Wheel Fittings
Rear Hub and Wheel Fittings
Mudguard, Chainguard, Oil Tank and Rear Brake
Petrol Tank, Handlebar, Mudguards, Toolbox and Dual Seat
Handlebars, Handrail and Megaphone
Tools and Sundries, Electrical Equipment
Numerical Index

Plate 2

ENGINE

350c.c. and 500c.c. Gold Star Clubmans and Road Racing

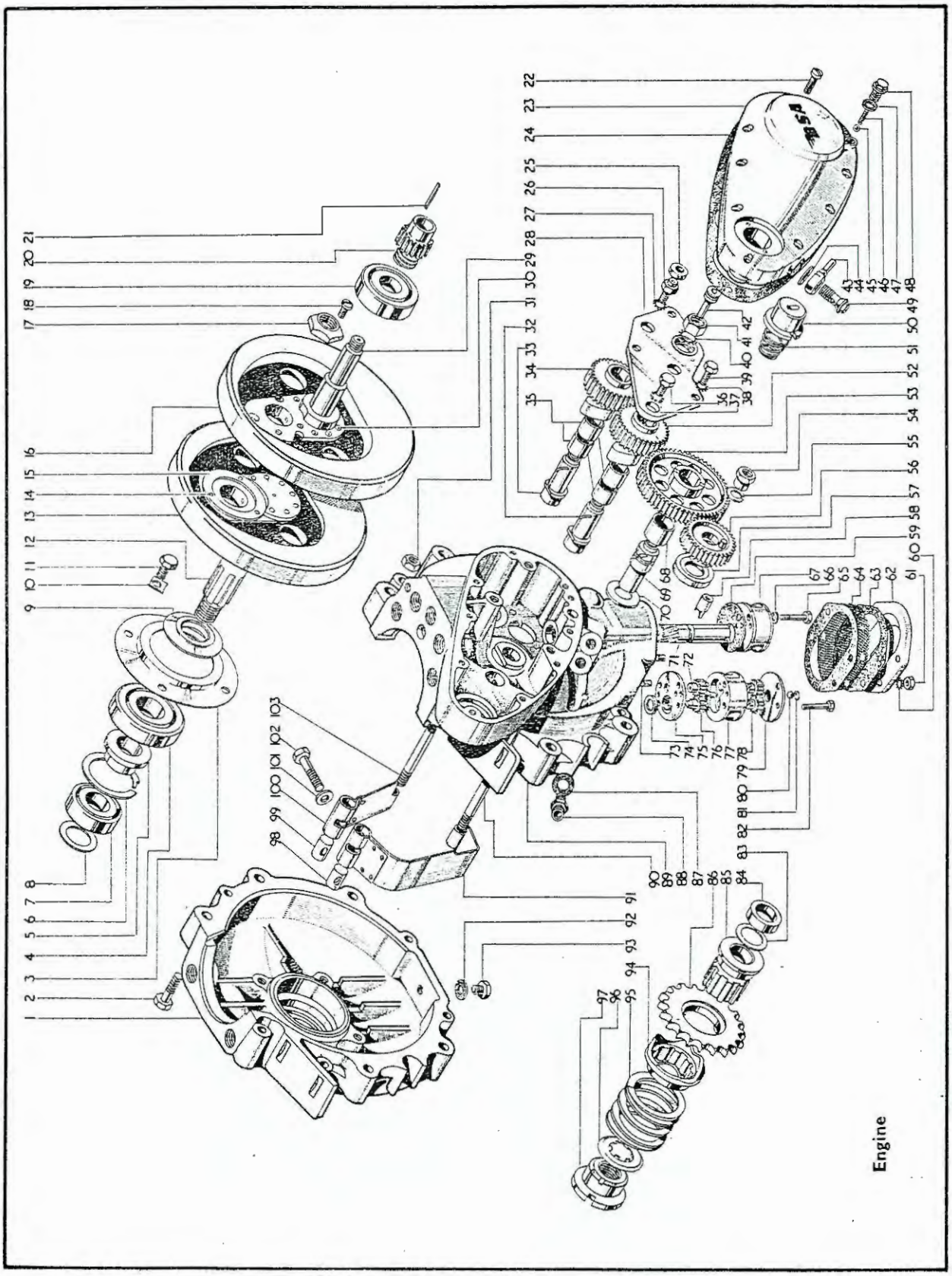

Plate 2—*continued.* ENGINE

Gold Star 350c.c. 500c.c. Clubmans and Road Racing

Plate Ref. Number.	Models.	Part No.	Description.	Number per set.
79	350c.c., 500c.c.	65–2625	Oil pump bottom plate	1
80	350c.c., 500c.c.	7/32″ dia.	Oil pump valve body ball	1
81	350c.c., 500c.c.	65–2622	Oil pump valve body circlip	1
82	350c.c., 500c.c.	15–848	Oil pump bolt	2
83	350c.c., 500c.c.	66–1707	Cush drive bearing alignment washer (.032″)	*as reqd.*
83	350c.c., 500c.c.	66–1708	Cush drive bearing alignment washer (.064″)	*as reqd.*
84	350c.c., 500c.c.	42–42	Cush drive distance piece	1
85	350c.c., 500c.c.	65–2523	Cush drive bearing	1
86	350c.c.	15–1566	Engine sprocket (18T)	1
86	500c.c.	15–1560	Engine sprocket (21T)	1
87	350c.c., 500c.c.	66–1683	Oil pipe crankcase pipe adaptor washer (fibre)	2
88	350c.c., 500c.c.	65–2252	Oil pipe crankcase pipe adaptor	2
89	350c.c., 500c.c.	66–1676	Crankcase with fixed fittings (gear side)	1
90	350c.c., 500c.c.	24–949	Crankcase stud (rear)	1
91	350c.c., 500c.c.	65–1888	Magdyno strap (long)	1
92	350c.c., 500c.c.	2–4553	Crankcase drain plug washer	1
93	350c.c., 500c.c.	28–243	Crankcase drain plug	1
94	350c.c., 500c.c.	15–1555	Cush drive sleeve	1
95	350c.c., 500c.c.	66–1706	Cush drive spring	1
96	350c.c., 500c.c.	65–2521	Cush drive bearing locking washer	1
97	350c.c., 500c.c.	65–2520	Cush drive bearing nut	1
98	350c.c., 500c.c.	65–2353	Magdyno strap eye plug (tapped)	1
99	350c.c., 500c.c.	65–2352	Magdyno strap eye plug (plain)	1
100	350c.c., 500c.c.	65–1425	Magdyno strap (short)	1
101	350c.c., 500c.c.	2–923	Magdyno strap clip bolt washer (plain)	1
102	350c.c., 500c.c.	29–4661	Magdyno strap clip bolt	1
103	350c.c., 500c.c.	31–212	Crankcase stud (top) (rear)	1

Plate 3 ENGINE

Gold Star 350c.c. 500c.c. Road Trim, Trials and Scrambles.

Plate Ref. Number.	Model.	Part No.	Description.	Number per set.
1	350c.c. Road Trim, Trials and Scrambles	65–1601	Cylinder barrel with liner	1
1	500c.c. Road Trim, Trials and Scrambles	65–1503	Cylinder barrel with liner	1
2	350c.c. Road Trim and Scrambles	65–1604	Cylinder head with fixed fittings	1
2	350c.c. Trials	65–1756	Cylinder head with fixed fittings	1
2	500c.c. Road Trim	65–1501	Cylinder head with fixed fittings	1
-	500c.c. Trials and Scrambles	65–1749	Cylinder head with fixed fittings	1
3	350c.c., 500c.c. Road Trim, Trials and Scrambles	65–1587	Rocker box joint washer (tower)	1
4	350c.c., 500c.c. Road Trim, Trials and Scrambles	65–1591	Cylinder head and rocker box stud (long)	3
5	350c.c., 500c.c. Road Trim, Trials and Scrambles	65–1084	Push rod complete	2
6	350c.c. Road Trim and Scrambles	42–2705	Exhaust pipe	1
6	350c.c. Trials	42–2778	Exhaust pipe	1
6	500c.c. Road Trim	42–2715	Exhaust pipe	1
6	500c.c. Trials and Scrambles	42–2705	Exhaust pipe	1
7	350c.c., 500c.c. Road Trim, Trials and Scrambles	65–1592	Cylinder head and rocker box stud (short)	6
8	350c.c. Road Trim	65–1644	Exhaust Valve	1
8	350c.c. Trials	65–1760	Exhaust valve	1
8	350c.c. Scrambles	65–1612	Exhaust valve	1
8	500c.c. Road Trim	65–1353	Exhaust valve	1
8	500c.c. Trials and Scrambles	65–1753	Exhaust valve	1

Plate 3—*continued.* ENGINE

Gold Star 350c.c. 500c.c. Road Trim, Trials and Scrambles

Plate Ref. Number.	Models	Part No.	Description.	Number per set.
9	350c.c. Road Trim, Trials and Scrambles	65–1596	Exhaust valve guide	1
9	500c.c. Trials and Scrambles	65–1596	Exhaust valve guide	1
9	500c.c. Road Trim	65–1598	Exhaust valve guide	1
10	350c.c. Road Trim, Trials and Scrambles	65–1627	Valve spring collar (exhaust)	1
10	500c.c. Road Trim, Trials and Scrambles	65–1629	Valve spring collar (exhaust)	1
11	350c.c. Road Trim, Trials and Scrambles	65–1626	Valve spring split cotter (exhaust) (halves)	2
11	500c.c. Road Trim, Trials and Scrambles	65–1625	Valve spring split cotter (exhaust) (halves)	2
12	350c.c., 500c.c. Road Trim Trials and Scrambles	65–1590	Rocker box inspection cover joint washer	1
13	350c.c., 500c.c. Road Trim Trials and Scrambles	65–1589	Rocker box inspection cover	1
14	350c.c., 500c.c. Road Trim Trials and Scrambles	24–8784	Rocker box stud washer (spring)	9
15	350c.c., 500c.c. Road Trim Trials and Scrambles	2–49	Rocker box stud nut	9
16	350c.c., 500c.c. Road Trim Trials and Scrambles	2–443	Exhaust lifter spindle nut	1
17	350c.c., 500c.c. Road Trim Trials and Scrambles	2–525	Exhaust lifter washer	1
18	350c.c., 500c.c. Road Trim Trials and Scrambles	65–1137	Exhaust lifter	1
19	350c.c., 500c.c. Road Trim Trials and Scrambles	2–443	Exhaust lifter cable holder nut	1
20	350c.c., 500c.c. Road Trim Trials and Scrambles	27–1163	Exhaust lifter cable holder	1
21	350c.c., 500c.c. Road Trim Trials and Scrambles	35–701	Exhaust lifter split pin	1
22	350c.c., 500c.c. Road Trim Trials and Scrambles	65–1165	Exhaust lifter spindle	1
23	350c.c., 500c.c. Road Trim Trials and Scrambles	2–2894	Exhaust lifter bush washer (fibre)	1
24	350c.c., 500c.c. Road Trim Trials and Scrambles	65–387	Exhaust lifter bush	1
25	350c.c., 500c.c. Road Trim Trials and Scrambles	65–401	Exhaust lifter spindle washer (felt)	1
26	350c.c., 500c.c. Road Trim Trials and Scrambles	65–402	Exhaust lifter spindle washer	1
27	350c.c., 500c.c. Road Trim Trials and Scrambles	65–403	Exhaust lifter spindle spring	1
28	350c.c., 500c.c. Road Trim Trials and Scrambles	66–1431	Exhaust lifter lever	1
29	350c.c., 500c.c. Road Trim Trials and Scrambles	2–525	Exhaust lifter washer	1
30	350c.c., 500c.c. Road Trim Trials and Scrambles	2–443	Exhaust lifter spindle nut	1
31	350c.c., 500c.c. Road Trim Trials and Scrambles	65–317	Rocker oil feed pipe banjo screw (inlet)	1
31	350c.c., 500c.c. Road Trim Trials and Scrambles	65–318	Rocker oil feed pipe banjo screw (exhaust)	1
32	350c.c., 500c.c. Road Trim Trials and Scrambles	31–8430	Rocker oil feed pipe banjo washer (fibre)	2
33	350c.c., 500c.c. Road Trim Trials and Scrambles	65–1319	Valve rocker (exhaust)	1
34	350c.c., 500c.c. Road Trim Trials and Scrambles	27–1111	Valve rocker fulcrum pin thrust washer	2
35	350c.c., 500c.c. Road Trim Trials and Scrambles	65–1317	Valve rocker (inlet)	1
36	350c.c., 500c.c. Road Trim Trials and Scrambles	65–1117	Valve rocker fulcrum pin spring	2
37	350c.c., 500c.c. Road Trim Trials and Scrambles	65–1118	Valve rocker fulcrum pin washer	2
38	350c.c., 500c.c. Road Trim Trials and Scrambles	65–1320	Valve rocker fulcrum pin	2
39	350c.c. Road Trim and Scrambles	65–1611	Valve (inlet)	1

ENGINE

Gold Star 350c.c. 500c.c. Road Trim, Trials and Scrambles

Plate Ref. Number.	Models.	Part No.	Description.	Number per set.
	350c.c. Trials	65–1759	Valve (inlet)	1
39	500c.c. Road Trim	65–1632	Valve (inlet)	1
39	500c.c. Trials and Scrambles	65–1752	Valve (inlet)	1
40	350c.c., 500c.c. Road Trim Trials and Scrambles	65–1519	Valve spring seat	2
41	350c.c. Road Trim, Trials and Scrambles	65–1595	Valve guide (inlet)	1
41	500c.c. Trials and Scrambles	65–1595	Valve guide (inlet)	1
41	500c.c. Road Trim	65–1597	Valve guide (inlet)	1
42	350c.c., 500c.c. Road Trim and Scrambles	65–1249	Valve spring (outer)	2
42	350c.c. Trials	65–1147	Valve spring (outer)	2
42	500c.c. Trials	65–1249	Valve spring (outer)	2
43	350c.c., 500c.c. Road Trim Trials and Scrambles	65–1259	Valve spring (inner)	2
44	350c.c. Road Trim, Trials and Scrambles	65–1628	Valve spring collar (inlet)	1
44	500c.c. Road Trim, Trials and Scrambles	65–1627	Valve spring collar (inlet)	1
45	350c.c., 500c.c. Road Trim Trials and Scrambles	65–1624	Valve spring split cotter (inlet) (halves)	2
46	350c.c., 500c.c. Road Trim Trials and Scrambles	66–8338	Rocker oil feed pipe connection (rubber)	2
48	350c.c., 500c.c. Road Trim Trials and Scrambles	65–1506	Rocker box	1
49	350c.c., 500c.c. Road Trim Trials and Scrambles	65–1588	Rocker box joint washer	1
50	350c.c., 500c.c. Road Trim Trials and Scrambles	65–311	Valve rocker fulcrum pin nut	2
51	350c.c., 500c.c. Road Trim Trials and Scrambles	36–481	Valve rocker fulcrum pin washer	2
52	350c.c., 500c.c. Road Trim Trials and Scrambles	2–49	Engine steady stay bolt nut	1
53	350c.c., 500c.c. Road Trim Trials and Scrambles	24–8784	Engine steady stay bolt washer spring	1
54	350c.c., 500c.c. Road Trim Trials and Scrambles	15–480	Engine steady stay bolt	1
55	350c.c. Road Trim, Trials and Scrambles	65–1341	Sparking plug	1
55	500c.c. Trials and Scrambles	65–1341	Sparking plug	1
55	500c.c. Road Trim	65–1339	Sparking plug	1
56	350c.c., 500c.c. Road Trim Trials and Scrambles	66–102	Sparking plug washer	1
57	350c.c., 500c.c. Road Trim Trials and Scrambles	65–1153	Engine steady stay	1
57A	500c.c. Road Trim, Trials and Scrambles	65–1433	Engine steady stay (for use with twin top feed T.T. carburetter)	1
58	350c.c., 500c.c. Road Trim Trials and Scrambles	29–565	Carburetter stud	2
59	350c.c., 500c.c. Road Trim Trials and Scrambles	2–49	Carburetter stud nut	2
60	350c.c., 500c.c. Road Trim Trials and Scrambles	36–382	Carburetter stud nut washer (shakeproof)	2
61	350c.c. Road Trim and Scrambles	67–933	Carburetter flange washer (Tufnol)	1
61	350c.c. Trials	65–1163	Carburetter flange washer (Tufnol)	1
61	350c.c. Road Trim, Trials and Scrambles	65–1418	Carburetter flange washer (Tufnol)	2
62	350c.c. Road Trim, Trials and Scrambles	65–1232	Carburetter flange washer (paper)	2
62	350c.c. Road Trim, Trials and Scrambles	65–1417	Carburetter flange washer (paper)	2
63	350c.c. Road Trim, Trials and Scrambles	65–1606	Cylinder head gasket	1
63	500c.c. Road Trim, Trials and Scrambles	65–1580	Cylinder head gasket	1
64	350c.c. Road Trim, Trials and Scrambles	2–2903	Cylinder head bolt washer (spring)	4
64	500c.c. Road Trim, Trials and Scrambles	3–110	Cylinder head bolt washer (spring)	4

Plate 3

ENGINE

350c.c. and 500c.c. Gold Star Road Trim, Trials and Scrambles

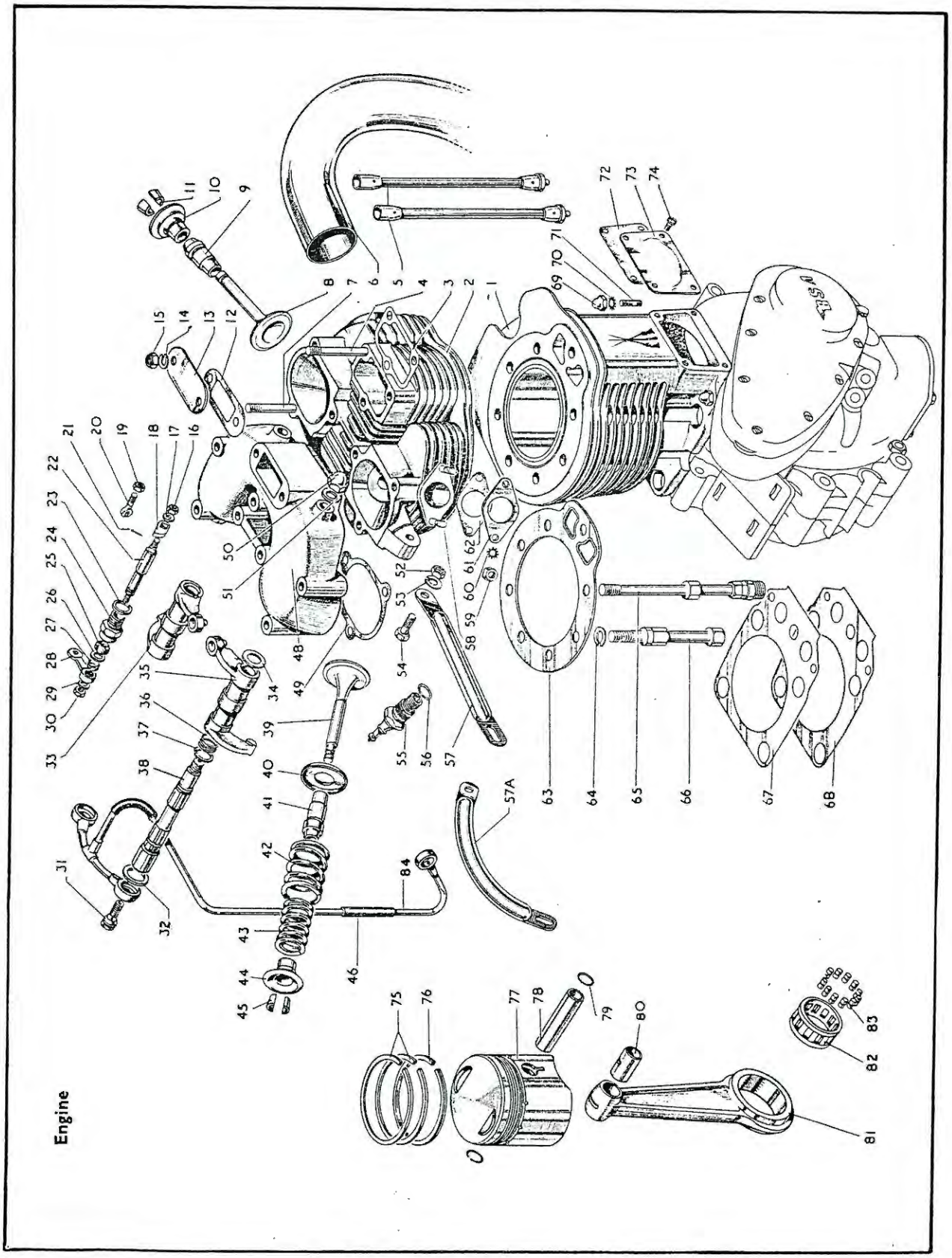

ENGINE

Gold Star 350c.c. 500c.c. Road Trim, Trials and Scrambles

Plate Ref. Number.	Models.	Part No.	Description.	Number per set.
65	350c.c. Road Trim, Trials and Scrambles	65–1609	Cylinder holding down bolt	4
65	500c.c. Road Trim, Trials and Scrambles	65–1403	Cylinder and head holding down bolt	4
66	350c.c. Road Trim, Trials and Scrambles	66–134	Cylinder head and barrel bolt (short)	4
66	500c.c. Road Trim, Trials and Scrambles	65–1413	Cylinder head bolt (medium)	4
67	350c.c., 500c.c. Road Trim Trials and Scrambles	65–1650	Cylinder base shim (.010″)	*as reqd.*
67	350c.c., 500c.c. Road Trim Trials and Scrambles	65–1651	Cylinder base shim (.020″)	*as reqd.*
67	350c.c., 500c.c. Road Trim Trials and Scrambles	65–1652	Cylinder base shim (.030″)	*as reqd.*
67	350c.c. Road Trim, Trials and Scrambles	65–1653	Cylinder base shim (.064″)	*as reqd.*
67	500c.c. Trials and Scrambles	65–1653	Cylinder base shim (.064″)	*as reqd.*
67	500c.c. Road Trim	65–1653	Cylinder base shim (.064″)	1
68	350c.c., 500c.c. Road Trim Trials and Scrambles	65–1582	Cylinder base washer	1
69	350c.c., 500c.c. Road Trim Trials and Scrambles	65–930	Cylinder barrel stud nut	2
70	350c.c., 500c.c. Road Trim Trials and Scrambles	29–541	Cylinder barrel stud nut washer (shakeproof)	2
71	350c.c., 500c.c. Road Trim Trials and Scrambles	24–4227	Cylinder barrel stud	1
72	350c.c., 500c.c. Road Trim Trials and Scrambles	66–1937	Push rod tappet recess cover joint washer	1
73	350c.c., 500c.c. Road Trim Trials and Scrambles	66–1936	Push rod tappet recess cover	1
74	350c.c., 500c.c. Road Trim Trials and Scrambles	29–2158	Push rod tappet recess cover screw	4
75	350c.c. Road Trim, Trials and Scrambles	65–1621	Compression ring	2
75	500c.c. Road Trim, Trials and Scrambles	65–1453	Compression ring	2
76	350c.c. Road Trim, Trials and Scrambles	65–490	Scraper ring	1
76	500c.c. Road Trim, Trials and Scrambles	65–1253	Scraper ring	1
77	350c.c. Road Trim	65–1615	Piston complete with gudgeon pin, rings and circlips (C.R. 8 to 1)	1
77	350c.c. Trials and Scrambles	65–1615	Piston complete with gudgeon pin, rings and circlips (C.R. 8 to 1)	*as reqd.*
77	350c.c. Road Trim, Trials and Scrambles	65–1666	Piston complete with gudgeon pin, rings and circlips (C.R. 8.5 to 1)	*as reqd.*
77	350c.c. Road Trim	65–1673	Piston complete with gudgeon pin, rings and circlips (C.R. 9 to 1)	1
77	350c.c. Trials and Scrambles	65–1673	Piston complete with gudgeon pin, rings and circlips (C.R. 9 to 1)	*as reqd.*
77	350c.c. Road Trim, Trials and Scrambles	65–1686	Piston complete with gudgeon pin, rings and circlips (C.R. 12.25 to 1)	*as reqd.*
77	350c.c. Trials	65–1680	Piston complete with gudgeon pin, rings and circlips (C.R. 6.5 to 1)	1
77	500c.c. Road Trim	65–1467	Piston complete with rings, gudgeon pin and circlips (C.R. 7.5 to 1)	1
77	500c.c. Trials and Scrambles	65–1467	Piston complete with rings, gudgeon pin and circlips (C.R. 7.5 to 1)	*as reqd.*
77	500c.c. Road Trim, Trials and Scrambles	65–1290	Piston complete with rings, gudgeon pin and circlips (C.R. 8 to 1)	*as reqd.*
77	500c.c. Road Trim and Trials	65–1537	Piston complete with rings, gudgeon pin and circlips (C.R. 9 to 1)	*as reqd.*
77	500c.c. Scrambles	65–1537	Piston complete with rings, gudgeon pin and circlips (C.R. 9 to 1)	1
77	500c.c. Road Trim, Trials and Scrambles	65–1278	Piston complete with gudgeon pin, rings and circlips (C.R. 11 to 1)	*as reqd.*
77	500c.c. Trials	65–1464	Piston complete with gudgeon pin, rings and circlips (C.R. 6.8 to 1)	1

Plate 3—*continued.* ENGINE

Gold Star 350c.c. 500c.c. Road Trim, Trials and Scrambles

Plate Ref. Number.	Models.	Part No.	Description.	Number per set
78	350c.c. Road Trim, Trials and Scrambles	65–440	Gudgeon pin	1
78	500c.c. Road Trim, Trials and Scrambles	66–953	Gudgeon pin	1
79	350c.c., 500c.c. Road Trim Trials and Scrambles	66–954	Gudgeon pin retaining ring	2
80	350c.c., 500c.c. Road Trim Trials and Scrambles	66–492	Connecting rod bush (small end)	1
81	350c.c. Road Trim, Trials and Scrambles	65–1613	Connecting rod complete with bushes	1
81	500c.c. Road Trim, Trials and Scrambles	65–1321	Connecting rod complete with bushes	1
82	350c.c., 500c.c. Road Trim Trials and Scrambles	66–506	Crankpin roller cage	1
83	350c.c., 500c.c. Road Trim Trials and Scrambles	24–375	Crankpin roller	24
84	350c.c., 500c.c. Road Trim Trials and Scrambles	42–46	Rocker oil feed pipe with rubber connections	1

Plate 4 ENGINE

Gold Star 350c.c. 500c.c. Road Trim, Trials and Scrambles.

Plate Ref. Number.	Model.	Part No.	Description.	Number per set.
1	350c.c., 500c.c. Road Trim Trials and Scrambles	65–2188	Oil valve spring retaining screw	1
2	350c.c., 500c.c. Road Trim Trials and Scrambles	66–1683	Oil valve spring retaining screw washer (fibre)	1
3	350c.c., 500c.c. Road Trim Trials and Scrambles	66–1684	Oil valve spring	1
4	350c.c., 500c.c. Road Trim Trials and Scrambles	¼″ diam.	Oil valve spring ball	1
5	350c.c., 500c.c. Road Trim Trials and Scrambles	65–2157	Timing cover screw	9
6	350c.c. Road Trim	65–1435	Timing cover complete	1
6	350c.c. Trials and Scrambles 500c.c. Road Trim, Trials and Scrambles	65–2143	Timing cover complete	1
7	350c.c., 500c.c. Road Trim Trials and Scrambles	65–2166	Timing cover breather extension pipe	1
8	350c.c., 500c.c. Road Trim Trials and Scrambles	15–8434	Timing cover breather extension pipe nut	1
9	350c.c., 500c.c. Road Trim Trials and Scrambles	65–2165	Air release body	1
10	350c.c., 500c.c. Road Trim Trials and Scrambles	65–2171	Air release adaptor screw	1
11	350c.c., 500c.c. Road Trim Trials and Scrambles	15–82	Air release disc	1
12	350c.c., 500c.c. Road Trim Trials and Scrambles	65–2168	Timing cover air release adaptor complete	1
13	350c.c., 500c.c. Road Trim Trials and Scrambles	31–8430	Air release adaptor washer (fibre)	1
14	350c.c., 500c.c. Road Trim Trials and Scrambles	66–2097	Cam pinion spindle bolt	2
15	350c.c., 500c.c. Road Trim Trials and Scrambles	66–1923	Oil feed washer (rubber)	2
16	350c.c., 500c.c. Road Trim Trials and Scrambles	36–382	Cam pinion spindle bolt washer (shakeproof)	2
17	350c.c., 500c.c. Road Trim Trials and Scrambles	66–698	Engine shaft oil feed pipe	1
18	350c.c., 500c.c. Road Trim Trials and Scrambles	29–905	Engine shaft timing pinion nut	1

ENGINE

Gold Star 350c.c. 500c.c. Road Trim, Trials and Scrambles

Plate Ref. Number.	Models.	Part No.	Description.	Number per set
19	... 350c.c., 500c.c. Road Trim ... Trials and Scrambles	65-695 ...	Engine shaft timing pinion locking washer (shakeproof)	1
20	... 350c.c., 500c.c. Road Trim ... Trials and Scrambles	66-2008 ...	Timing gear plate complete	1
21	... 350c.c., 500c.c. Road Trim ... Trials and Scrambles	21-2902 ...	Timing gear plate bolt (Whit.)	3
22	... 350c.c., 500c.c. Road Trim ... Trials and Scrambles	36-382 ...	Timing gear plate bolt washer (shakeproof)	2
23	... 350c.c., 500c.c. Road Trim ... Trials and Scrambles	1-5069 ...	Timing gear plate bolt	1
24	... 350c.c., 500c.c. Road Trim ... Trials and Scrambles	36-382 ...	Tinimg gear plate bolt washer (shakeproof)	2
25	... 350c.c., 500c.c. Road Trim ... Trials and Scrambles	66-2250 ...	Magdyno drive idler pinion complete	1
26	... 350c.c., 500c.c. Road Trim ... Trials and Scrambles	24-195 ...	Magdyno driving pinion nut	1
27	... 350c.c., 500c.c. Road Trim ... Trials and Scrambles	2-2903 ...	Magdyno driving pinion washer (spring)	1
28	... 350c.c., 500c.c. Road Trim ... Trials and Scrambles	65-2334 ...	Magdyno driving pinion	1
29	... 350c.c., 500c.c. Road Trim ... Trials and Scrambles	65-2316 ...	Magdyno driving pinion oil seal	1
30	... 350c.c., 500c.c. Road Trim ... Trials and Scrambles	$\frac{7}{32}$" dia. ...	Oil pump valve body ball	1
31	... 350c.c., 500c.c. Road Trim ... Trials and Scrambles	65-2622 ...	Oil pump valve body ball circlip	1
32	... 350c.c., 500c.c. Road Trim ... Trials and Scrambles	65-2619 ...	Oil pump complete	1
33	... 350c.c., 500c.c. Road Trim ... Trials and Scrambles	65-2604 ...	Oil pump fixing bolt	2
34	.. 350c.c., 500c.c. Road Trim ... Trials and Scrambles	15-848 ...	Oil pump bolt	2
35	... 350c.c., 500c.c. Road Trim ... Trials and Scrambles	24-978 ...	Oil pump fixing bolt washer (spring)	2
36	... 350c.c., 500c.c. Road Trim ... Trials and Scrambles	65-2625 ...	Oil pump bottom plate	1
37	... 350c.c., 500c.c. Road Trim ... Trials and Scrambles	65-2599 ...	Oil pump scavenge gear	1
38	.. 350c.c., 500c.c. Road Trim ... Trials and Scrambles	65-2596 ...	Oil pump body	1
39	... 350c.c., 500c.c. Road Trim ... Trials and Scrambles	65-2600 ...	Oil pump feed gear (driven)...	1
40	... 350c.c., 500c.c. Road Trim ... Trials and Scrambles	65-2601 ...	Oil pump feed gear (driver)	1
41	... 350c.c., 500c.c. Road Trim ... Trials and Scrambles	65-2606 ...	Oil pump top plate washer	1
42	... 350c.c., 500c.c. Road Trim ... Trials and Scrambles	65-2598 ...	Oil pump top plate	1
43	... 350c.c., 500c.c. Road Trim ... Trials and Scrambles	65-2618 ...	Oil pump and crankcase joint washer	1
44	... 350c.c., 500c.c. Road Trim ... Trials and Scrambles	66-2620 ...	Oil pump driving spindle	1
45	... 350c.c., 500c.c. Road Trim ... Trials and Scrambles	31-222 ...	Crankcase scavenge cover stud	4
46	... 350c.c., 500c.c. Road Trim ... Trials and Scrambles	2-49 ...	Crankcase connecting bolt nut	5
47	... 350c.c., 500c.c. Road Trim ... Trials and Scrambles	66-1920 ...	Timing cover washer	1
48	... 350c.c., 500c.c. Road Trim ... Trials and Scrambles	65-693 ...	Engine shaft timing pinion key	1
49	... 350c.c., 500c.c. Road Trim ... Trials and Scrambles	65-692 ...	Engine shaft timing pinion	1
50	... 350c.c., 500c.c. Road Trim ... Trials and Scrambles	65-441 ...	Cam pinion bush	4
51	... 350c.c., 500c.c. Road Trim ... and Scrambles	65-2450 ...	Exhaust cam pinion complete	1
51	... 350c.c., 500c.c. Trials ...	65-2420 ...	Exhaust cam pinion complete	1
52	... 350c.c., 500c.c. Road Trim ...	65-2448 ...	Inlet cam pinion complete	1
52	... 350c.c., 500c.c. Trials ...	65-2420 ...	Inlet cam pinion complete	1
52	... 350c.c., 500c.c. Scrambles ...	65-2454 ...	Inlet cam pinion complete	1
53	... 350c.c., 500c.c. Road Trim ... Trials and Scrambles	65-2426 ...	Cam pinion spindle (exhaust)	1
54	... 350c.c., 500c.c. Road Trim ... Trials and Scrambles	65-2425 ...	Cam pinion spindle (inlet)	1

ENGINE

Gold Star 350c.c. 500c.c. Road Trim, Trials and Scrambles

Plate Ref. Number	Models.	Part No.	Description.	Number per set.
55	350c.c., 500c.c. Road Trim Trials and Scrambles	65–2580	Oil pump driving spindle retaining pin	1
56	350c.c., 500c.c. Road Trim Trials and Scrambles	36–3528	Magdyno drive idler pinion thrust washer	1
57	350c.c., 500c.c. Road Trim Trials and Scrambles	65–2336	Magdyno drive idler pinion bush	1
58	350c.c., 500c.c. Road Trim Trials and Scrambles	65–2335	Magdyno drive idler pinion spindle	1
59	350c.c., 500c.c. Road Trim Trials and Scrambles	2–51	Crankcase scavenge cover stud nut	4
60	350c.c., 500c.c. Road Trim Trials and Scrambles	29–541	Crankcase scavenge cover stud washer (shakeproof)	4
61	350c.c., 500c.c. Road Trim Trials and Scrambles	65–2611	Crankcase scavenge cover	1
62	350c.c., 500c.c. Road Trim Trials and Scrambles	65–2623	Oil pump filter	1
63	350c.c., 500c.c. Road Trim Trials and Scrambles	65–2612	Crankcase scavenge cover washer (oil proof)	2
64	350c.c., 500c.c. Road Trim Trials and Scrambles	24–722	Roller bearing (gear side)	1
65	350c.c., 500c.c. Road Trim Trials and Scrambles	65–1129	Engine shaft (gear side)	1
66	350c.c., 500c.c. Road Trim Trials and Scrambles	65–1327	Crankpin nut	2
67	350c.c., 500c.c. Road Trim Trials and Scrambles	2–77	Crankpin locking screw	2
68	350c.c. Road Trim and Scrambles	65–1325	Flywheel with engine shaft assembly (gear side)	1
68	350c.c. Trials	65–1125	Flywheel with engine shaft assembly (gear side)	1
68	500c.c. Road Trim and Scrambles	65–1358	Flywheel with engine shaft assembly (gear side)	1
68	500c.c. Trials	65–1235	Flywheel with engine shaft assembly (gear side)	1
69	350c.c., 500c.c. Road Trim Trials and Scrambles	65–2252	Oil pipe crankcase pipe adaptor	2
70	350c.c., 500c.c. Road Trim Trials and Scrambles	66–1683	Oil pipe crankcase pipe adaptor washer (fibre)	2
71	350c.c., 500c.c. Road Trim Trials and Scrambles	31–212	Crankcase stud (top) (rear)	1
72	350c.c., 500c.c. Road Trim Trials and Scrambles	24–949	Crankcase stud (rear)	1
73	350c.c. Road Trim, Trials and Scrambles	66–1650	Crankcase with fixed fittings (gear side)	1
73	500c.c. Road Trim, Trials and Scrambles	66–1648	Crankcase with fixed fittings (gear side)	1
74	350c.c., 500c.c. Road Trim Trials and Scrambles	65–1526	Inlet and exhaust tappet	2
75	350c.c., 500c.c. Road Trim Trials and Scrambles	66–1494	Tappet guide (inlet and exhaust)	2
76	350c.c., 500c.c. Road Trim Trials and Scrambles	65–1332	Inlet and exhaust tappet locknut	2
77	350c.c., 500c.c. Road Trim Trials and Scrambles	66–1511	Inlet and exhaust tappet head	2
78	350c.c. Road Trim, Trials and Scrambles	66–1652	Crankcase with fixed fittings (drive side)	1
78	500c.c. Road Trim, Trials and Scrambles	66–1654	Crankcase with fixed fittings (drive side)	1
79	350c.c., 500c.c. Road Trim Trials and Scrambles	65–2352	Strap eye plug (plain)	1
80	350c.c. Road Trim, Trials and Scrambles	65–1427	Magdyno strap (long)	1
81	500c.c. Road Trim, Trials and Scrambles	65–1423	Magneto strap (long)	1
82	350c.c., 500c.c. Road Trim Trials and Scrambles	65–1425	Magdyno and magneto strap (short)	1
83	350c.c., 500c.c. Road Trim Trials and Scrambles	65–2353	Strap eye plug (tapped)	1
84	350c.c. Road Trim, Trials and Scrambles	66–660	Engine shaft distance collar (inner) (drive side)	1
84	500c.c. Road Trim, Trials and Scrambles	65–1398	Engine shaft distance collar (inner) (drive side)	1
85	500c.c. Road Trim, Trials and Scrambles	31–426	Bearing retaining plate bolt	4
86	500c.c. Road Trim, Trials and Scrambles	65–1438	Bearing retaining plate lockwasher	4

Plate 4

ENGINE

350c.c. and 500c.c. Gold Star Road Trim, Trials and Scrambles

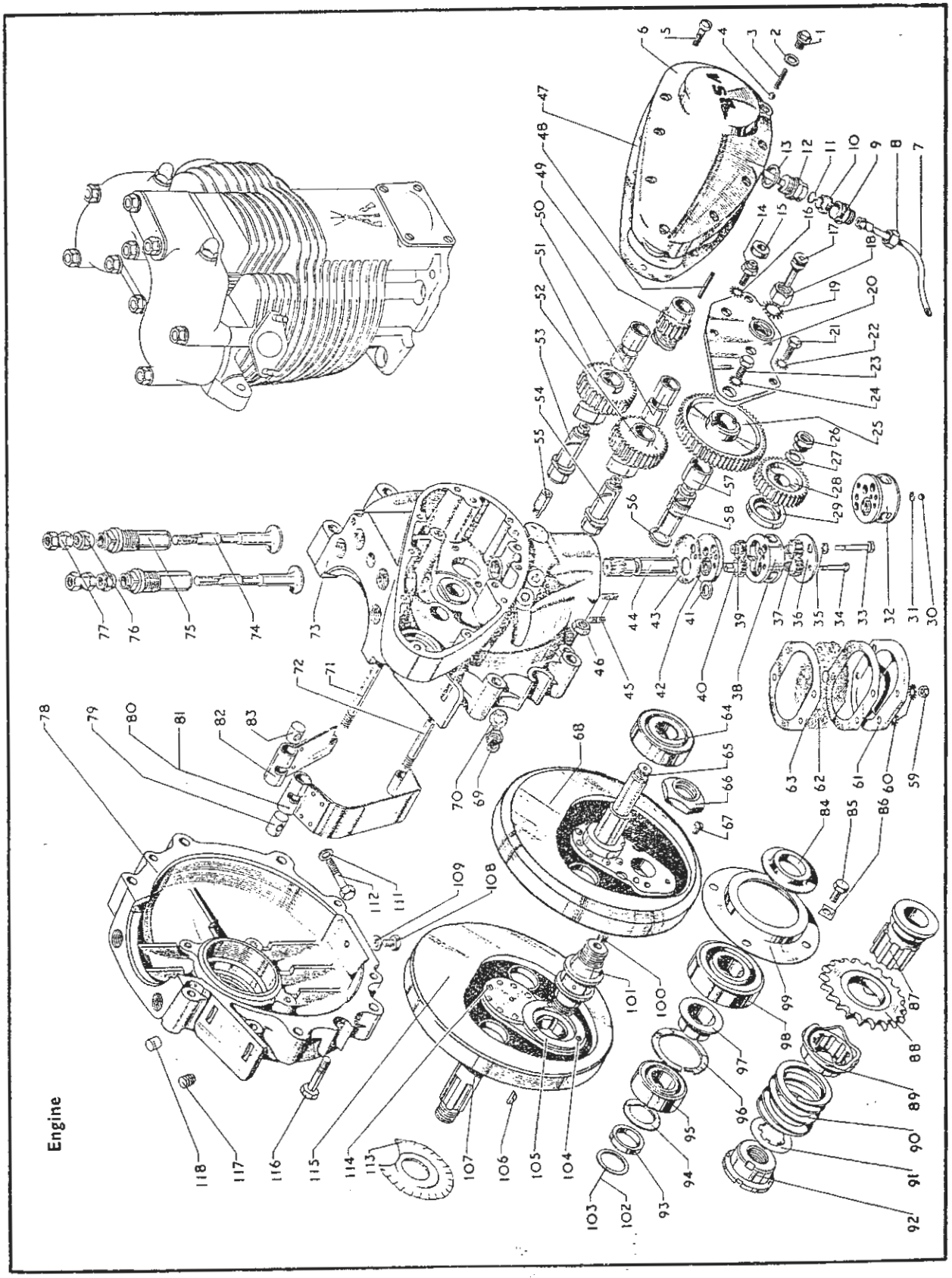

Gearbo
Clutch
Front
Chainc
Frame a
Fittings
Rear
Suspens
Front Fork
and
Fittings
Front Hub
and Wheel
Fittings
Rear Hub
and Wheel
Fittings
Mudguard
Chainguard,
Tank and R
Brake
Petrol Tan
Handlebar
Mudguard
Toolbox an
Dual Sea
Handlebars,
Handrail an
Megaphone
Tools and
Sundries,
Electrical
Equipmen
Numeri
Inde

Plate 4—*continued.* ENGINE

Gold Star 350c.c. 500c.c. Road Trim, Trials and Scrambles

Plate Ref. Number.	Models.	Part No.	Description.	Number per set.
87	350c.c., 500c.c. Road Trim Trials and Scrambles	65–2523	Cush drive bearing	1
88	350c.c. Road Trim and Scrambles	15–1566	Engine sprocket (18T)	1
88	350c.c. Trials	15–1568	Engine sprocket (16T)	1
88	500c.c. Road Trim	15–1565	Engine sprocket (19T)	1
88	500c.c. Trials	15–1564	Engine sprocket (20T)	1
83	500c.c. Scrambles	15–1567	Engine sprocket (17T)	1
89	350c.c., 500c.c. Road Trim Trials and Scrambles	15–1555	Cush drive sleeve	1
90	350c.c., 500c.c. Road Trim Trials and Scrambles	66–1706	Cush drive spring	1
91	350c.c., 500c.c. Road Trim Trials and Scrambles	65–2521	Cush drive bearing locking washer	1
92	350c.c., 500c.c. Road Trim Trials and Scrambles	65–2520	Cush drive bearing nut	1
93	350c.c., 500c.c. Road Trim and Trials	65–2528	Cush drive distance piece	1
93	350c.c. Scrambles	65–2528	Cush drive distance piece	1
93	500c.c. Scrambles	42–42	Cush drive distance piece	1
94	350c.c., 500c.c. Road Trim Trials and Scrambles	66–661	Engine shaft shim (drive side)	1
95	350c.c., 500c.c. Road Trim Trials and Scrambles	65–2045	Ball bearing (drive side)	1
96	350c.c., 500c.c. Road Trim Trials and Scrambles	65–2240	Main bearing spring ring	1
97	500c.c. Road Trim, Trials and Scrambles	65–1396	Engine shaft distance collar (outer)	1
98	500c.c. Road Trim, Trials and Scrambles	24–724	Roller bearing (drive side)	1
98	500c.c. Road Trim, Trials and Scrambles	65–1388	Roller bearing (drive side)	1
99	500c.c. Road Trim, Trials and Scrambles	65–1397	Bearing retaining plate	1
100	350c.c., 500c.c. Road Trim Trials and Scrambles	65–479	Crankpin plug screw	1
101	350c.c., 500c.c. Road Trim Trials and Scrambles	66–262	Crankpin	1
102	350c.c., 500c.c. Road Trim Trials and Scrambles	66–1708	Cush drive bearing alignment washer (.064")	1
103	350c.c., 500c.c. Road Trim Trials and Scrambles	66–1707	Cush drive bearing alignment washer (.032")	1
104	350c.c., 500c.c. Road Trim Trials and Scrambles	66–630	Connecting rod thrust washer rivet	6
105	350c.c., 500c.c. Road Trim Trials and Scrambles	66–629	Connecting rod thrust washer	2
106	350c.c., 500c.c. Road Trim Trials and Scrambles	2–36	Crankpin key	1
107	350c.c. Road Trim, Trials and Scrambles	65–1128	Engine shaft (drive side)	1
107	500c.c. Road Trim, Trials and Scrambles	65–1412	Engine shaft (drive side)	1
108	350c.c., 500c.c. Road Trim Trials and Scrambles	28–243	Crankcase drain plug	1
109	350c.c., 500c.c. Road Trim Trials and Scrambles	2–4553	Crankcase drain plug washer	1
111	350c.c., 500c.c. Road Trim Trials and Scrambles	2–923	Strap clip bolt washer (plain)	1
112	350c.c., 500c.c. Road Trim Trials and Scrambles	29–4661	Strap clip bolt	1
113	350c.c. Road Trim, Trials and Scrambles	65–1330	Oil flinger	1
114	350c.c., 500c.c. Road Trim Trials and Scrambles	27–1239	Engine shaft rivet	14
115	350c.c. Road Trim and Scrambles	65–1323	Flywheel with engine shaft assembled (drive side)	1
115	350c.c. Trials	65–1123	Flywheel with engine shaft assembled (drive side)	1
115	500c.c. Road Trim and Scrambles	65–1406	Flywheel with engine shaft assembled (drive side)	1
115	500c.c. Trials	65–1233	Flywheel with engine shaft assembled (drive side)	1
116	350c.c., 500c.c. Road Trim Trials and Scrambles	15–1355	Crankcase connecting bolt	3
117	350c.c., 500c.c. Scrambles	66–1717	Magneto dowel (B.T.H.)	4
118	350c.c., 500c.c. Scrambles	66–2313	Magneto dowel (Lucas)	4

Plate 5

GEARBOX

Gold Star 350c.c. 500c.c.

Plate Ref. Number.	Model.	Part No.	Description.	Number per set.
1	350c.c., 500c.c.	67-3026	Ball bearing spring ring	1
2	350c.c., 500c.c.	67-3067	Gearbox sprocket oil seal	1
3	350c.c., 500c.c.	24-4065	Constant mesh gear ball bearing	1
4	350c.c., 500c.c.	67-3073	Constant mesh gear bush	1
5	350c.c., 500c.c. Clubmans and Road Racing	67-3184	Constant mesh gear complete (25T)	1
5	350c.c., 500c.c. Scrambles	67-3311	Constant mesh gear complete (25T)	1
5	350c.c., 500c.c. Road Trim	67-3192	Constant mesh gear complete (26T)	1
5	350c.c., 500c.c. Trials	67-3309	Constant mesh gear complete (26T)	1
6	350c.c., 500c.c.	67-3080	Constant mesh gear bush (drilled)	1
7	350c.c., 500c.c. Road Trim	67-3201	Mainshaft sliding gear (20T)	1
7	350c.c., 500c.c. Clubmans and Road Racing	67-3361	Mainshaft sliding gear (22T)	1
7	350c.c., 500c.c. Trials	67-3301	Mainshaft sliding gear (17T)	1
7	350c.c. 500c.c. Trials	67-3210	Mainshaft sliding gear (22T)	1
7	350c.c., 500c.c. Scrambles	67-3302	Mainshaft sliding gear (19T)	1
7	350c.c., 500c.c. Scrambles	67-3305	Mainshaft sliding gear (22T)	1
8	350c.c., 500c.c. Road Trim	67-3202	Mainshaft sliding gear (24T)	1
8	350c.c., 500c.c. Clubmans and Road Racing	67-3187	Mainshaft sliding gear (24T)	1
9	350c.c., 500c.c. Road Trim	67-3329	Gearbox mainshaft with gear	1
9	350c.c., 500c.c. Road Trim Clubmans & Road Racing	67-3330	Mainshaft only	1
9	350c.c., 500c.c. Clubmans and Road Racing	67-3332	Gearbox mainshaft with gear	1
9	350c.c., 500c.c. Trials	67-3313	Mainshaft only	1
9	350c.c., 500c.c. Scrambles	67-3314	Gearbox mainshaft with gear	1
9	350c.c., 500c.c. Scrambles	67-3315	Mainshaft only	1
10	350c.c., 500c.c.	2-433	Mainshaft gear key	1
11	350c.c., 500c.c.	29-3860	Clutch push rod	1
12	350c.c., 500c.c.	67-3101	Mainshaft gear locating ring	1
13	350c.c., 500c.c. Road Trim and Scrambles	67-3191	Mainshaft gear (16T)	1
13	350c.c., 500c.c. Clubmans and Road Racing	67-3221	Mainshaft gear (18T)	1
14	350c.c., 500c.c.	24-4217	Mainshaft bearing	1
15	350c.c., 500c.c.	67-3028	Mainshaft bearing spring ring	1
16	350c.c., 500c.c.	67-3161	Kickstarter ratchet pinion sleeve washer	1
17	350c.c., 500c.c.	67-3169	Kickstarter ratchet pinion bush	1
18	350c.c., 500c.c.	67-3162	Kickstarter ratchet spring	1
19	350c.c., 500c.c.	67-3168	Kickstarter ratchet pinion	1
20	350c.c., 500c.c.	67-3167	Kickstarter ratchet	1
21	350c.c., 500c.c.	67-3164	Kickstarter ratchet and mainshaft lockwasher	1
22	350c.c., 500c.c.	67-3163	Kickstarter ratchet and mainshaft nut	1
23	350c.c., 500c.c. Road Trim	65-3380	Gearchange operating lever	1
23	350c.c., 500c.c. Clubmans and Road Racing	42-3017	Gearchange operating lever	1
24	350c.c., 500c.c.	29-3250	Foot operating lever rubber	1
25	350c.c., 500c.c.	2-525	Selector lever operating washer	1
26	350c.c., 500c.c.	65-3361	Selector lever operating screw	1
27	350c.c., 500c.c.	65-3061	Outer cover fixing screw (long)	2
28	350c.c., 500c.c.	35-702	Clutch push rod lever nut split pin	1
29	350c.c., 500c.c.	3-720	Clutch push rod adjustment screw nut	1
30	350c.c., 500c.c.	65-3403	Clutch push rod adjustment screw complete	1
31	350c.c., 500c.c.	65-3360	Clutch push rod lever	1
32	350c.c., 500c.c.	67-3180	Clutch operating lever complete	1
33	350c.c., 500c.c.	2-525	Clutch push rod lever washer	1
34	350c.c., 500c.c.	15-1485	Clutch push rod lever nut	1
35	350c.c., 500c.c.	67-3353	Gearchange lever spindle bush	1
36	350c.c., 500c.c.	67-3340	Footchange stop plate return spring	1
37	350c.c., 500c.c.	35-709	Gear selector plate spring washer split pin	1
38	350c.c., 500c.c. Road Trim Trials and Scrambles	67-3335	Selector lever spindle complete	1
38	350c.c., 500c.c. Clubmans and Road Racing	42-3013	Selector lever spindle complete	1
39	350c.c., 500c.c.	67-3341	Gear selector plate	1
40	350c.c., 500c.c.	67-3342	Gear selector plate spring	1
41	350c.c., 500c.c.	24-868	Gear selector plate spring washer	1
42	350c.c., 500c.c.	67-3170	Footchange lever spindle bush	1
43	350c.c., 500c.c.	65-2157	Inner cover retaining screw	1

GEARBOX

Gold Star 350c.c. 500c.c.

Plate Ref. Number.	Models	Part No.	Description.	Number per set.
44	350c.c., 500c.c. Road Trim	67-3344	Gearbox inner cover with fixed fittings	1
44	350c.c., 500c.c. Clubmans and Road Racing	42-3083	Gearbox inner cover with fixed fittings	1
45	350c.c., 500c.c.	67-3350	Gearchange quadrant pivot pin	1
46	350c.c., 500c.c.	67-3346	Gearbox inner cover joint washer	1
47	350c.c., 500c.c.	67-3347	Gearchange quadrant complete	1
48	350c.c., 500c.c. Road Trim	67-3332	Gear control cam plate complete	1
48	350c.c., 500c.c. Clubmans and Road Racing	42-3011	Gear control cam plate complete	1
49	350c.c., 500c.c.	67-3116	Gear shifter fork shaft	1
50	350c.c., 500c.c. Road Trim	42-3008	Gearbox complete with fixed fittings	1
50	350c.c., 500c.c. Clubmans and Road Racing	42-3072	Gearbox complete with fixed fittings	1
51	350c.c., 500c.c.	67-3328	Gear cam plate pivot pin washer	1
52	350c.c., 500c.c.	24-7000	Gear cam plate pivot pin nut	1
53	350c.c., 500c.c.	24-8504	Gearbox casing plug washer	1
54	350c.c., 500c.c.	42-3049	Gearbox casing plug	1
55	350c.c., 500c.c.	67-3117	Gear shifter fork shaft grub screw	1
56	350c.c., 500c.c.	42-3016	Gearbox sprocket (19T)	1
56	350c.c., 500c.c. Road Trim Trials and Scrambles	42 3015	Gearbox sprocket (16T)	*as reqd.*
56	350c.c., 500c.c. Road Trim	42-3048	Gearbox sprocket (20T)	*as reqd.*
57	350c.c., 500c.c.	24-4263	Gearbox sprocket locking washer	1
58	350c.c., 500c.c.	67-3053	Gearbox sprocket nut	1
59	350c.c., 500c.c.	29-3449	Gearbox inspection cover washer	1
60	350c.c., 500c.c.	29-3448	Gearbox inspection cover	1
61	350c.c., 500c.c.	2-498	Gearbox inspection cover screw	1
62	350c.c., 500c.c.	27-4258	Gearbox inspection cover screw	3
63	350c.c., 500c.c.	67-3023	Outer cover stud	4
64	350c.c., 500c.c.	2-4553	Gearbox drain plug washer	1
65	350c.c., 500c.c.	28-243	Gearbox drain plug	1
66	350c.c., 500c.c.	67-3119	Gear control cam plate plunger	1
67	350c.c., 500c.c.	67-3121	Gear control cam plate plunger spring	1
68	350c.c., 500c.c.	67-3122	Gear control cam plate plunger housing nut	1
69	350c.c., 500c.c.	67-3120	Gear control cam plate plunger housing	1
70	350c.c., 500c.c.	67-3327	Gear cam plate pivot pin	1
71	350c.c., 500c.c.	67-3204	Gear shifter fork	2
72	350c.c., 500c.c. Clubmans and Road Racing	42-3074	Layshaft needle roller race (clutch end)	1
73	350c.c., 500c.c. Clubmans and Road Racing	42-3078	Layshaft thrust washer (clutch end)	1
74	350c.c., 500c.c. Clubmans and Road Racing	42-3079	Layshaft thrust washer (cover end)	1
75	350c.c., 500c.c. Clubmans and Road Racing	42-3075	Layshaft needle roller race (cover end)	1
76	350c.c., 500c.c. Clubmans and Road Racing	42-3095	Layshaft circlip	1
77	350c.c., 500c.c. Road Trim Trials and Scrambles	67-3230	Layshaft bush	1
79	350c.c., 500c.c. Road Trim and Trials	42-3018	Layshaft with gear	1
79	350c.c., 500c.c. Clubmans and Road Racing	42-3085	Layshaft with gear	1
79	350c.c., 500c.c. Scrambles	42-3021	Layshaft with gear	1
79	350c.c., 500c.c. Road Trim and Trials	42-3019	Layshaft only	1
79	350c.c., 500c.c. Clubmans and Road Racing	42-3094	Layshaft only	1
80	350c.c., 500c.c.	2-49	Kickstarter quadrant stop nut	1
81	350c.c., 500c.c.	24-8784	Kickstarter quadrant stop washer	1
82	350c.c., 500c.c.	67-3151	Kickstarter spindle bush	1
83	350c.c., 500c.c.	67-3152	Kickstarter quadrant stop	1
84	350c.c., 500c.c. Road Trim Trials and Scrambles	67-3178	Kickstarter crank spindle assembly	1
84	350c.c., 500c.c. Clubmans and Road Racing	42-3035	Kickstarter crank spindle complete	1
85	350c.c., 500c.c. Road Trim Trials and Scrambles	67-3088	Speedometer driving gear (6T)	1
85	350c.c., 500c.c. Clubmans and Road Racing	42-3033	Speedometer driving gear (6T)	1

Plate 5

GEARBOX

350c.c. and 500c.c. Gold Star

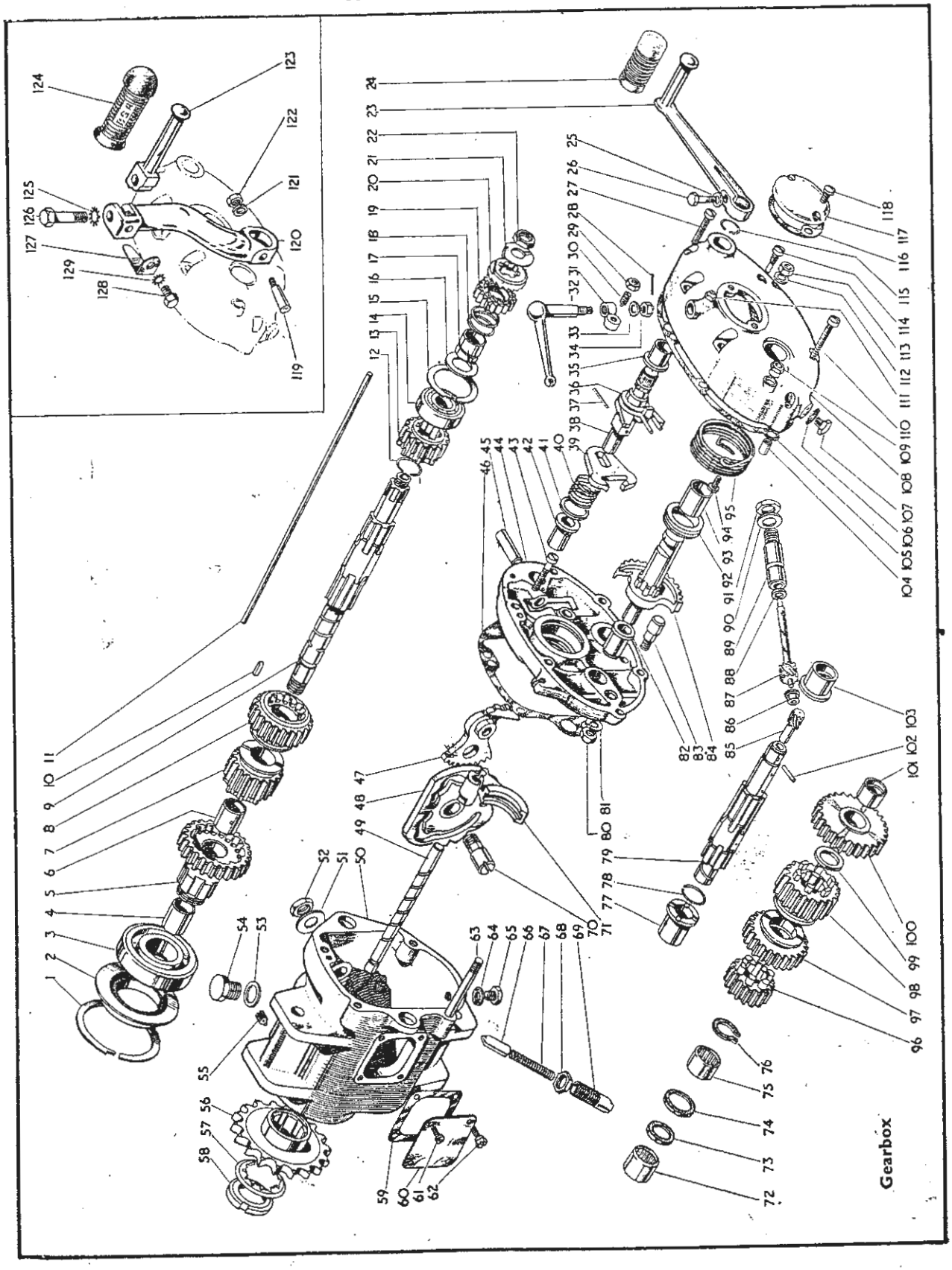

Plate 5—*continued.*

GEARBOX

Gold Star 350c.c. 500c.c.

Plate Ref. Number.	Models	Part No.	Description.	Number per set.
86	350c.c., 500c.c.	65-3377	Speedometer gear bush	1
87	350c.c., 500c.c. Clubmans and Road Racing	42-3032	Speedometer driven gear (10T)	1
87	350c.c., 500c.c. Road Trim Trials and Scrambles	67-3175	Speedometer driven gear (11T)	1
88	350c.c., 500c.c.	65-3375	Speedometer driven gear thrust washer	1
89	350c.c., 500c.c.	65-3390	Speedometer driven gear bush	1
90	350c.c., 500c.c.	65-3392	Speedometer driven gear thrust washer	1
91	350c.c., 500c.c.	65-3391	Speedometer driven gear bush nut	1
92	350c.c., 500c.c.	67-3173	Kickstarter spindle sleeve	1
93	350c.c., 500c.c.	67-3153	Kickstarter lever spindle bush	1
94	350c.c., 500c.c.	2-3718	Kickstarter spring screw	1
95	350c.c., 500c.c.	67-3174	Kickstarter spring	1
96	350c.c., 500c.c. Road Trim and Trials	42-3020	Layshaft gear (17T)	1
96	350c.c., 500c.c. Clubmans and Road Racing	42-3086	Layshaft gear (18T)	1
96	350c.c., 500c.c. Scrambles	42-3022	Layshaft gear (18T)	1
97	350c.c., 500c.c. Road Trim	42-3023	Layshaft sliding gear (23T)	1
97	350c.c., 500c.c. Trials	42-3025	Layshaft sliding gear (26T)	1
97	350c.c., 500c.c. Scrambles	42-3024	Layshaft sliding gear (24T)	1
97	350c.c., 500c.c. Clubmans and Road Racing	42-3026	Layshaft sliding gear (21T)	1
97	350c.c., 500c.c. Trials and Scrambles	67-3212	Layshaft sliding gear (21T)	1
98	350c.c., 500c.c. Road Trim Clubmans & Road Racing	67-3198	Layshaft sliding gear (19T)	1
99	350c.c., 500c.c.	67-3203	Layshaft thrust washer	1
100	350c.c., 500c.c. Road Trim and Scrambles	67-3199	Layshaft gear complete (27T)	1
100	350c.c., 500c.c. Trials	67-3213	Layshaft gear complete (29T)	1
100	350c.c., 500c.c. Clubmans and Road Racing	42-3087	Layshaft gear complete (25T)	1
101	350c.c., 500c.c.	67-3093	Layshaft gear bush	1
102	350c.c., 500c.c.	67-3128	Layshaft speedo driving gear peg	1
103	350c.c., 500c.c. Road Trim Trials and Scrambles	67-3099	Layshaft bush	1
104	350c.c., 500c.c.	66-3074	Dowel	2
105	350c.c., 500c.c.	67-3354	Gearbox outer cover joint washer	1
106	350c.c., 500c.c.	2-4553	Oil level plug washer	1
107	350c.c., 500c.c.	28-243	Oil level plug	1
108	350c.c., 500c.c.	67-3351	Gearbox outer cover with fixed fittings	1
109	350c.c., 500c.c.	27-4401	Kickstarter spring locknut	1
110	350c.c., 500c.c.	67-1705	Outer cover fixing screw (short)	1
111	350c.c., 500c.c.	28-2080	Grease nipple	1
112	350c.c., 500c.c.	2-923	Outer cover fixing washer	4
113	350c.c., 500c.c.	67-3034	Outer cover fixing nut	4
114	350c.c., 500c.c.	67-3176	Speedo driven gear retaining pin	1
115	350c.c., 500c.c.	15-4240	Gearchange operating spindle circlip	1
116	350c.c., 500c.c.	67-3033	Inspection cover joint washer	1
117	350c.c., 500c.c.	67-3024	Inspection cover	1
118	350c.c., 500c.c.	24-7178	Inspection cover fixing screw	2
119	350c.c., 500c.c.	2-2579	Kickstarter crank cotter	1
120	350c.c., 500c.c.	42-3037	Kickstarter crank complete	1
120	350c.c., 500c.c.	42-3038	Kickstarter crank only	1
121	350c.c., 500c.c.	15-5155	Kickstarter crank washer	1
122	350c.c., 500c.c.	2-2578	Kickstarter crank nut	1
123	350c.c., 500c.c.	65-3427	Kickstarter crank pedal	1
124	350c.c., 500c.c.	65-3397	Kickstarter crank rubber	1
125	350c.c., 500c.c.	66-4707	Kickstarter pedal washer (shakeproof)	1
126	350c.c., 500c.c.	29-5156	Kickstarter pedal bolt	1
127	350c.c., 500c.c.	65-3428	Kickstarter crank pedal spring	1
128	350c.c., 500c.c.	2-220	Kickstarter crank spring bolt	1
129	350c.c., 500c.c.	29-541	Kickstarter crank spring bolt washer (shakeproof)	1

Plate 6

CLUTCH and FRONT CHAINCASE

Gold Star 350c.c. and 500c.c.

Plate Ref. Number.	Model.	Part No.	Description.	Number per set.
—	350c.c., 500c.c. Clubmans and Road Racing	42-3053	Clutch complete (44T)	*as reqd.*
—	350c.c., 500c.c. Clubmans and Road Racing	42-3059	Clutch complete (43T)	1
—	350c.c., 500c.c. Scrambles Touring and Trials	42-3052	Clutch complete (43T)	1
1	350c.c., 500c.c.	67-1706	Primary chaincase front fixing screw	3
	350c.c., 500c.c.	67-1711	Primary chaincase oil level and drain screw	2
2	350c.c., 500c.c.	67-1709	Primary chaincase oil level and drain screw washer (fibre)	2
3	350c.c., 500c.c.	65-3063	Primary chaincase front fixing screw	7
4	350c.c., 500c.c.	2-2395	Clutch spring retaining stud nut	12
5	350c.c., 500c.c.	66-3800	Clutch spring	6
6	350c.c., 500c.c.	66-3781	Clutch spring cup	6
7	350c.c., 500c.c.	42-3056	Clutch actuating cap complete	1
8	350c.c., 500c.c. Clubmans and Road Racing	42-3063	Clutch plate ferodo insert	120
8	350c.c., 500c.c. Scrambles Touring and Trials	65-3858	Clutch plate ferodo insert	120
9	350c.c., 500c.c.	65-3911	Clutch ballrace inner ring	1
10	350c.c., 500c.c.	65-3910	Clutch ballrace retaining ring	2
11	350c.c., 500c.c. Clubmans and Road Racing	42-3061	Clutch chainwheel ferodo insert	24
11	350c.c., 500c.c. Scrambles Touring and Trials	66-3891	Clutch chainwheel ferodo insert	24
12	350c.c., 500c.c. Scrambles	24-8716	Primary chain	1
12	350c.c. Road Trim and Touring	24-8716	Primary chain	1
12	350c.c. Clubmans and Road Racing	24-8930	Primary chain	1
12	500c.c. Road Trim and Touring	24-8930	Primary chain	1
12	500c.c. Clubmans and Road Racing	24-8931	Primary chain	1
12	350c.c. Trials	24-8716	Primary chain	1
12	500c.c. Trials	24-8931	Primary chain	1
13	350c.c., 500c.c.	65-3873	Clutch sleeve	1
14	350c.c., 500c.c.	65-3833	Clutch sleeve collar	1
15	350c.c., 500c.c.	66-7523	Primary chaincase sliding plate bolt	2
16	350c.c., 500c.c.	2-1462	Primary chaincase sliding plate bolt washer (spring)	2
17	350c.c., 500c.c.	2-443	Primary chaincase sliding plate bolt nut	2
18	350c.c., 500c.c.	65-109	Primary chaincase back fixing bolt	1
19	350c.c., 500c.c.	15-7563	Primary chaincase back fixing bolt distance collar	1
20	350c.c., 500c.c.	35-33	Primary chaincase back fixing bolt washer (spring)	1
21	350c.c., 500c.c.	2-49	Primary chaincase back fixing bolt nut	1
22	350c.c., 500c.c.	66-3074	Primary chaincase dowel	2
23	350c.c., 500c.c.	42-7502	Primary chaincase (back)	1
24	350c.c., 500c.c.	42-7504	Primary chaincase washer (back) (felt)	1
25	350c.c., 500c.c.	66-7520	Primary chaincase sliding plate complete	1
26	350c.c., 500c.c.	65-3872	Clutch plate	1
27	350c.c., 500c.c. Clubmans and Road Racing	42-3058	Clutch chainwheel complete (44T) (with MZ41 inserts)	*as reqd.*
27	350c.c., 500c.c. Clubmans and Road Racing	42-3060	Clutch chainwheel complete (43T)	1
27	350c.c., 500c.c. Scrambles Touring and Trials	42-3054	Clutch chainwheel complete (43T)	1
28	350c.c., 500c.c.	65-3912	Clutch ballrace ring	1
29	350c.c., 500c.c.	42-7507	Primary chaincase joint washer (paper)	1
30	350c.c., 500c.c.	65-3824	Clutch driven plate	5
31	350c.c., 500c.c. Clubmans and Road Racing	42-3062	Clutch driving plate with inserts	5
31	350c.c., 500c.c. Scrambles Touring and Trials	65-3857	Clutch driving plate with inserts	5
32	350c.c., 500c.c.	66-3903	Clutch driving plate centre with studs	1
33	350c.c., 500c.c.	65-3822	Mainshaft nut locking washer	1
34	350c.c., 500c.c.	66-3787	Mainshaft nut	1
35	350c.c., 500c.c.	67-42	Primary chaincase inspection cap washer (fibre)	1
36	350c.c., 500c.c.	65-3364	Primary chaincase inspection cap	1
37	350c.c., 500c.c.	42-7508	Primary chaincase front fixing screw	3
38	350c.c., 500c.c.	42-7506	Primary chaincase (front)	1
39	350c.c., 500c.c.	66-7575	Primary chaincase and crankcase joint washer	1
40	350c.c., 500c.c.	24-8784	Primary chaincase back securing bolt washer (spring)	3
41	350c.c., 500c.c.	67-4028	Primary chaincase back securing bolt	3

Plate 6

CLUTCH and FRONT CHAINCASE

350c.c. and 500c.c. Gold Star

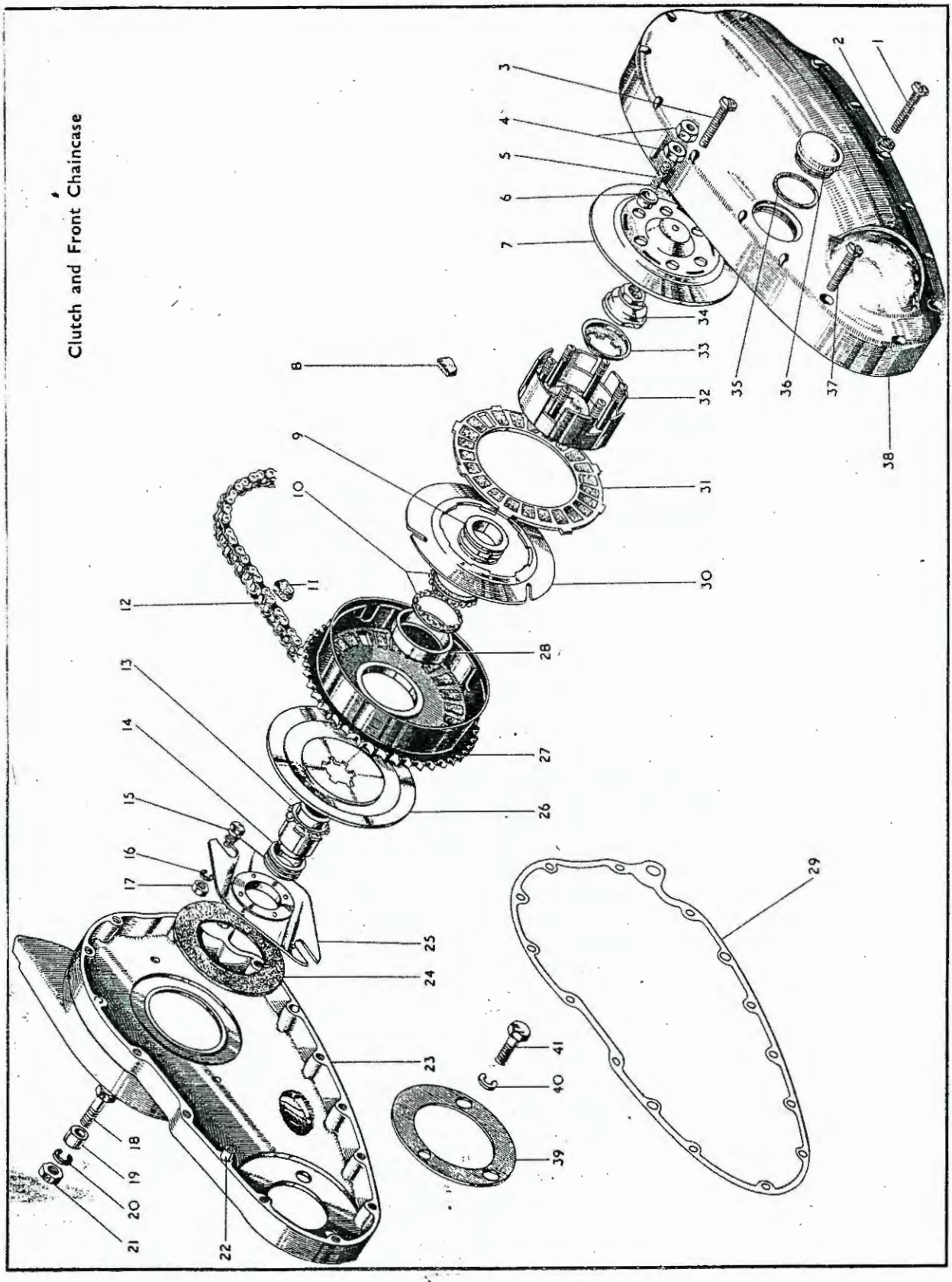

Plate 7

FRAME and FITTINGS

Gold Star 350c.c. and 500c.c.

Plate Ref. Number.	Model.	Part No.	Description.	Number per set.
1	350c.c., 500c.c. Scrambles excepted	42–4816	Rear engine plate stud (when footrests in rear position)	1
2	350c.c., 500c.c. Scrambles excepted	65–695	Rear engine plate stud washer (shakeproof) (when footrests in rear position)	2
3	350c.c., 500c.c. Scrambles excepted	15–5753	Rear engine plate stud nut (when footrests in rear position)	2
4	350c.c., 500c.c.	65–4182	Rear engine and gearbox plate stud (top and bottom rear)	2
5	350c.c., 500c.c.	2–1733	Rear engine and gearbox plate stud washer (plain) (top and bottom rear)	4
6	350c.c., 500c.c.	2–522	Rear engine and gearbox plate stud washer (spring) (top and bottom rear)	4
7	350c.c., 500c.c.	2–46	Rear engine and gearbox plate stud nut (top and bottom rear)	4
8	350c.c., 500c.c.	2–1945	Gearbox pivot stud washer (plain)	2
9	350c.c., 500c.c.	2–1967	Gearbox pivot stud washer (spring)	2
10	350c.c., 500c.c.	2–1925	Gearbox pivot stud nut	2
11	350c.c., 500c.c.	42–4077	Gearbox pivot stud	1
12	350c.c., 500c.c.	27–5683	Rear engine and gearbox plate stud (bottom front)	1
13	350c.c., 500c.c.	2–1733	Rear engine and gearbox plate stud washer (plain) (bottom front)	2
14	350c.c., 500c.c.	2–522	Rear engine and gearbox plate stud washer (spring) (bottom front)	2
15	350c.c., 500c.c.	2–46	Rear engine and gearbox plate stud nut (bottom front)	2
16	350c.c., 500c.c.	2–46	Crankcase and rear engine plate fixing stud nut (bottom)	2
17	350c.c., 500c.c.	2–522	Crankcase and rear engine plate fixing stud washer (spring) (bottom)	2
18	350c.c., 500c.c.	2–1733	Crankcase and rear engine plate fixing stud washer (plain) (bottom)	2
19	350c.c., 500c.c.	27–5683	Crankcase rear engine plate fixing stud (bottom)	1
20	350c.c., 500c.c.	27–5683	Crankcase fixing stud (front) (when crankcase shield is fitted)	1
21	350c.c., 500c.c.	42–4063	Front engine plate cover	1
22	350c.c., 500c.c.	29–3319	Front engine plate cover screw washer (shakeproof)	6
23	350c.c., 500c.c.	2–1309	Front engine plate cover screw	6
24	350c.c., 500c.c.	66–4149	Ball head cup	2
25	350c.c., 500c.c.	42–4209	Frame complete with fixed fittings	1
26	350c.c., 500c.c.	28–2080	Ball head grease nipple	1
27	350c.c., 500c.c.	66–4707	Saddle front fixing bolt washer (shakeproof)	1
28	350c.c., 500c.c.	2–46	Saddle front fixing bolt nut	1
29	350c.c., 500c.c.	42–4070	Front engine plate and frame distance tube	1
30	350c.c., 500c.c.	27–5690	Front engine plate frame stud (top)	1
31	350c.c., 500c.c.	2–522	Front engine plate frame stud washer (spring)	4
32	350c.c., 500c.c.	2–46	Front engine plate frame stud nut	4
33	350c.c., 500c.c.	2–46	Crankcase front fixing stud nut	6
34	350c.c., 500c.c.	2–522	Crankcase front fixing stud washer (spring)	6
35	350c.c., 500c.c.	27–5684	Crankcase and front engine plate front fixing stud	3
36	350c.c., 500c.c.	42–4070	Front engine plate and frame distance tube	1
37	350c.c., 500c.c.	42–4099	Front engine plate stud (bottom) and horn fixing stud	1
37	350c.c., 500c.c.	27–6275	Front engine plate stud (bottom) (when horn is not fitted)	1
38	350c.c., 500c.c.	42–4072	Rear engine and gearbox plate (top)	2
39	350c.c., 500c.c.	42–4073	Rear engine and gearbox plate (bottom)	2
40	350c.c., 500c.c.	65–4182	Crankcase and rear engine plate top fixing stud	1
41	350c.c., 500c.c.	42–4071	Front engine plate distance collar	2
42	350c.c., 500c.c.	42–4068	Front engine plate (offside)	1
42	350c.c., 500c.c.	42–4066	Front engine plate (nearside)	1
43	350c.c., 500c.c.	2–46	Crankcase and rear engine plate top fixing stud nut	2
44	350c.c., 500c.c.	2–522	Crankcase and rear engine plate top fixing stud washer (spring)	2
45	350c.c., 500c.c.	2–1733	Crankcase and rear engine plate top fixing stud washer (plain)	2
46	350c.c., 500c.c.	2–1925	Gearbox locking stud nut	1
47	350c.c., 500c.c.	2–1967	Gearbox locking stud washer (spring)	1
48	350c.c., 500c.c.	42–4076	Gearbox adjusting screw	1
49	350c.c., 500c.c.	2–1616	Gearbox adjusting screw locknut	1
50	350c.c., 500c.c.	15–5664	Gearbox adjusting screw nut	1
51	350c.c., 500c.c.	27–5705	Gearbox adjusting screw stop	1
51A	350c.c., 500c.c.	42–4075	Gearbox locking stud washer (serrated)	1
52	350c.c., 500c.c.	42–4074	Gearbox locking stud complete	1
53	350c.c., 500c.c.	2–1462	Gearbox adjusting screw stop washer (spring)	1
54	350c.c., 500c.c.	2–2395	Gearbox adjusting screw stop nut	1

FRAME and FITTINGS

Gold Star 350c.c. and 500c.c.

Plate Ref. Number.	Model.	Part No.	Description.	Number per set.
55	350c.c., 500c.c.	24–6770	Battery base plate bolt	4
56	350c.c., 500c.c.	2–923	Battery base plate bolt washer (plain)	2
57	350c.c., 500c.c.	15–6524	Battery base plate bolt nut	2
58	350c.c., 500c.c.	36–382	Battery base plate bolt washer (shakeproof)	4
59	350c.c., 500c.c.	42–4515	Battery base plate	1
60	350c.c., 500c.c.	42–4272	Rear engine plate cover complete	1
61	350c.c., 500c.c.	28–2080	Saddle front fixing bolt grease nipple	1
62	350c.c., 500c.c.	67–4030	Saddle front fixing bolt	1
—	350c.c., 500c.c.	42–4514	Battery carrier complete	1
63	350c.c., 500c.c.	42–4516	Battery strap (side) complete	1
64	350c.c., 500c.c.	42–4502	Battery strap (top)	1
65	350c.c., 500c.c.	24–7343	Battery strap bolt	2
66	350c.c., 500c.c.	42–9032	Saddle	1
66A	350c.c., 500c.c.	2–6537	Battery strap bolt washer	2
67	350c.c., 500c.c.	42–4505	Battery strap swivel pin (plain)	2
68	350c.c., 500c.c.	42–4506	Battery strap swivel pin (tapped)	2
69	350c.c., 500c.c.	42–4503	Battery strap (side)	1
70	350c.c., 500c.c.	2–49	Saddle rear fixing stud nut	4
71	350c.c., 500c.c.	2–923	Saddle rear fixing stud washer (plain)	4
72	350c.c., 500c.c.	67–4040	Saddle rear fixing stud	2
73	350c.c., 500c.c. Scrambles excepted	42–4813	Footrest hanger stud (nearside) (when footrests in rear position)	1
74	350c.c., 500c.c. Scrambles excepted	2–46	Footrest anchor bolt nut (when footrests in rear position)	2
75	350c.c., 500c.c. Scrambles excepted	2–522	Footrest anchor bolt washer (spring) (when footrests in rear position)	2
76	350c.c., 500c.c. Scrambles excepted	42–4812	Footrest hanger bracket (when footrests in rear position)	2
77	350c.c., 500c.c. Scrambles excepted	24–6040	Footrest swivel bolt nut (when footrests in rear position)	2
78	350c.c., 500c.c. Scrambles excepted	36–382	Footrest swivel bolt washer (shakeproof) (when footrests in rear position)	2
79	350c.c., 500c.c. Scrambles excepted	29–7561	Folding footrest complete (when footrests in rear position)	2
80	350c.c., 500c.c. Scrambles excepted	65–4917	Footrest anchor bolt (when footrests in rear position)	2
81	350c.c., 500c.c. Scrambles excepted	29–7564	Footrest swivel bolt (when footrests in rear position)	2
82	350c.c., 500c.c. Scrambles excepted	2–46	Footrest hanger stud nut (when footrests in rear position)	2
83	350c.c., 500c.c. Scrambles excepted	66–4707	Footrest hanger stud washer (shakeproof) (when footrests in rear position)	2
84	350c.c., 500c.c. Scrambles excepted	2–861	Footrest hanger stud washer (plain) (when footrests in rear position)	2
85	350c.c., 500c.c. Scrambles excepted	42–4815	Footrest hanger stud distance tube (nearside) (when footrests in rear position)	1
86	350c.c., 500c.c. Scrambles excepted	29–7561	Pillion footrest complete	2
87	350c.c., 500c.c. Scrambles excepted	29–7564	Pillion footrest swivel bolt	2
88	350c.c., 500c.c. Scrambles excepted	29–7560	Pillion footrest anchor bolt	2
89	350c.c., 500c.c. Scrambles excepted	2–522	Pillion footrest anchor bolt washer (spring)	2
90	350c.c., 500c.c. Scrambles excepted	2–46	Pillion footrest anchor bolt nut	2
91	350c.c., 500c.c. Scrambles excepted	36–382	Pillion footrest swivel bolt washer (shakeproof)	2
92	350c.c., 500c.c. Scrambles excepted	24–6040	Pillion footrest swivel bolt nut	2
93	350c.c., 500c.c. Scrambles excepted	2–522	Footrest hanger stud washer (spring) (when footrests in rear position)	2
94	350c.c., 500c.c. Scrambles excepted	2–46	Footrest hanger stud nut (when footrests in rear position)	2
95	350c.c., 500c.c. Scrambles excepted	42–4814	Footrest hanger stud (offside) (when footrests in rear position)	1

Plate 7

FRAME and FITTINGS

350c.c. and 500c.c. Gold Star (Swinging Arm)

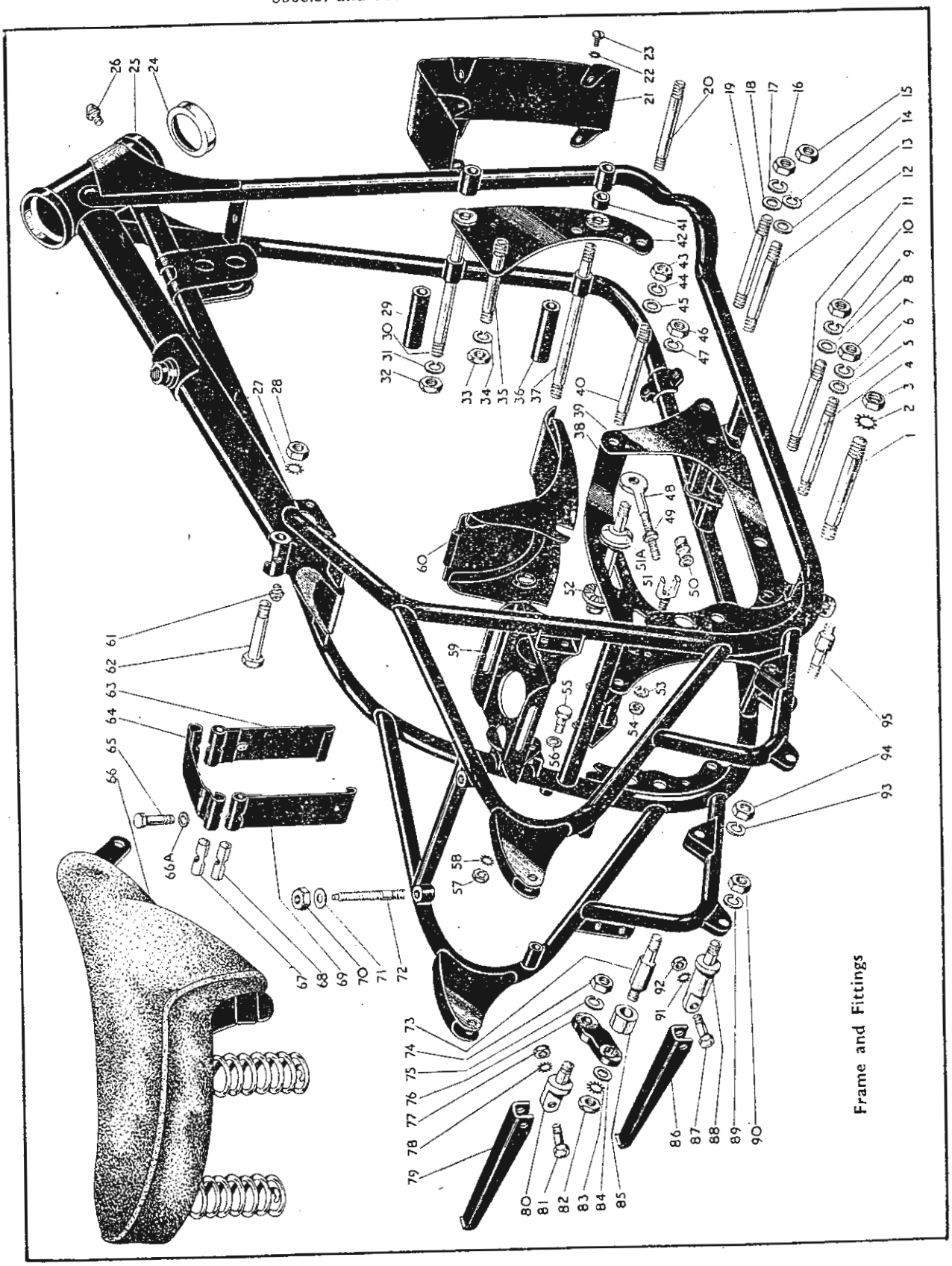

Rear Suspen
Front For and Fittings
Front Hub and Whee Fittings
Rear Hub and Wheel Fittings
Mudguar Chainguard Tank and I Brake
Petrol Ta Handleb Mudguar Toolbox Dual S
Handlebar Handrail a Megaphor
Tools and Sundries. Electrical Equipmen
Numer Inde

Plate 8

REAR SUSPENSION

Gold Star 350c.c. and 500c.c.

Plate Ref. Number.	Model.	Part No.	Description.	Number per set.
1	350c.c., 500c.c.	42–4719	Central stand complete	1
2	350c.c., 500c.c.	28–2080	Central stand grease nipple	1
3	350c.c., 500c.c.	65–4727	Central stand spring	1
4	350c.c., 500c.c.	42–4713	Central stand distance tube	1
5	350c.c., 500c.c.	42–4714	Central stand pivot stud	1
6	350c.c., 500c.c.	2–1945	Central stand pivot stud washer (plain)	1
7	350c.c., 500c.c.	2–1967	Central stand pivot stud washer (spring)	1
8	350c.c., 500c.c.	24–5860	Central stand pivot stud nut	2
9	350c.c., 500c.c. Scrambles excepted	42–4806	Central distance tube complete (offside) (when footrests in forward position)	1
10	350c.c., 500c.c. Scrambles excepted	42–4804	Footrest bracket (offside) (when footrests in forward position)	1
11	350c.c., 500c.c. Scrambles excepted	42–4808	Footrest stud complete (when footrests in forward position)	1
12	350c.c., 500c.c. Scrambles excepted	42–4117	Swinging arm fork spindle locknut washer	1
13	350c.c., 500c.c. Scrambles excepted	42–4116	Swinging arm fork spindle locknut	1
14	350c.c., 500c.c. Scrambles excepted	29–7551	Footrest rubber (when footrests in forward position)	2
15	350c.c., 500c.c. Scrambles excepted	65–4811	Footrest distance tube complete (nearside) (when footrests in forward position)	1
16	350c.c., 500c.c. Scrambles excepted	42–4805	Footrest bracket (nearside) (when footrests in forward position)	1
17	350c.c., 500c.c. Scrambles excepted	24–5914	Footrest stud washer (plain) (when footrests in forward position)	2
18	350c.c., 500c.c. Scrambles excepted	65–695	Footrest stud washer (shakeproof) (when footrests in forward position)	1
19	350c.c., 500c.c. Scrambles excepted	15–5753	Footrest stud securing nut (when footrests in forward position)	1
20	350c.c., 500c.c.	1–1796	Rear mudguard bracket and damper top fixing bolt nut	2
21	350c.c., 500c.c.	2–522	Rear mudguard bracket and damper top fixing bolt washer (spring)	2
22	350c.c., 500c.c. Trials and Scrambles	42–2001	Crankcase shield	1
23	350c.c., 500c.c. Scrambles excepted	42–4291	Rear suspension outer shroud	2
23	350c.c., 500c.c. Scrambles	42–4148	Rear suspension outer shroud	2
24	350c.c., 500c.c. Clubmans and Road Trim	42–4294	Rear suspension damper spring	2
24	350c.c., 500c.c. Scrambles	42–4142	Rear suspension damper spring	2
25	350c.c., 500c.c.	65–4185	Rear mudguard bracket and damper top fixing bolt	2
26	350c.c., 500c.c.	2–1733	Rear mudguard bracket and damper top fixing bolt washer (plain)	2
27	350c.c., 500c.c.	42–6763	Rear mudguard bracket and damper spacing collar	2
28	350c.c., 500c.c. Scrambles	42–4136	Rear suspension damper complete	2
29	350c.c., 500c.c.	42–4115	Swinging arm housing "silent bloc"	2
30	350c.c., 500c.c.	42–4112	Swinging arm fork spindle complete	2
31	350c.c., 500c.c.	36–382	Swinging arm fork spindle securing bolt washer (shakeproof)	1
32	350c.c., 500c.c.	66–2010	Swinging arm fork spindle securing bolt	1
33	350c.c., 500c.c. Scrambles excepted	42–4289	Rear suspension split spring retainer (retaining outer shroud) (two halves)	2
34	350c.c., 500c.c. Scrambles excepted	42–4292	Rear suspension inner shroud	2
34	350c.c., 500c.c. Scrambles	42–4149	Rear suspension inner shroud	2
35	350c.c., 500c.c. Scrambles	42–4151	Rear suspension split spring retainer (retaining outer shroud) (two halves)	2
36	350c.c., 500c.c.	42–4155	Rear suspension mounting bush (rubber only)	4
37	350c.c., 500c.c. Clubmans and Road Trim	42–4286	Rear suspension damper complete	2
38	350c.c., 500c.c.	3–1399	Rear suspension damper bottom fixing bolt	2
39	350c.c., 500c.c.	2–1733	Rear suspension damper bottom fixing bolt washer (plain)	2
40	350c.c., 500c.c.	42–6040	Adjusting screw for rear wheel	2
41	350c.c., 500c.c.	1–6032	Adjusting screw locknut for rear wheel	2
42	350c.c., 500c.c.	42–4102	Swinging arm complete	1
43	350c.c., 500c.c.	67–4129	Rear suspension damper bottom fixing bolt washer	2
44	350c.c., 500c.c.	66–4707	Rear suspension damper bottom fixing bolt washer (shakeproof)	2
45	350c.c., 500c.c.	2–46	Rear suspension damper bottom fixing bolt nut	2
46	350c.c., 500c.c. Scrambles	42–4830	Footrest (nearside) (when footrests in forward position)	1

Plate 8

REAR SUSPENSION

350c.c. and 500c.c. Gold Star

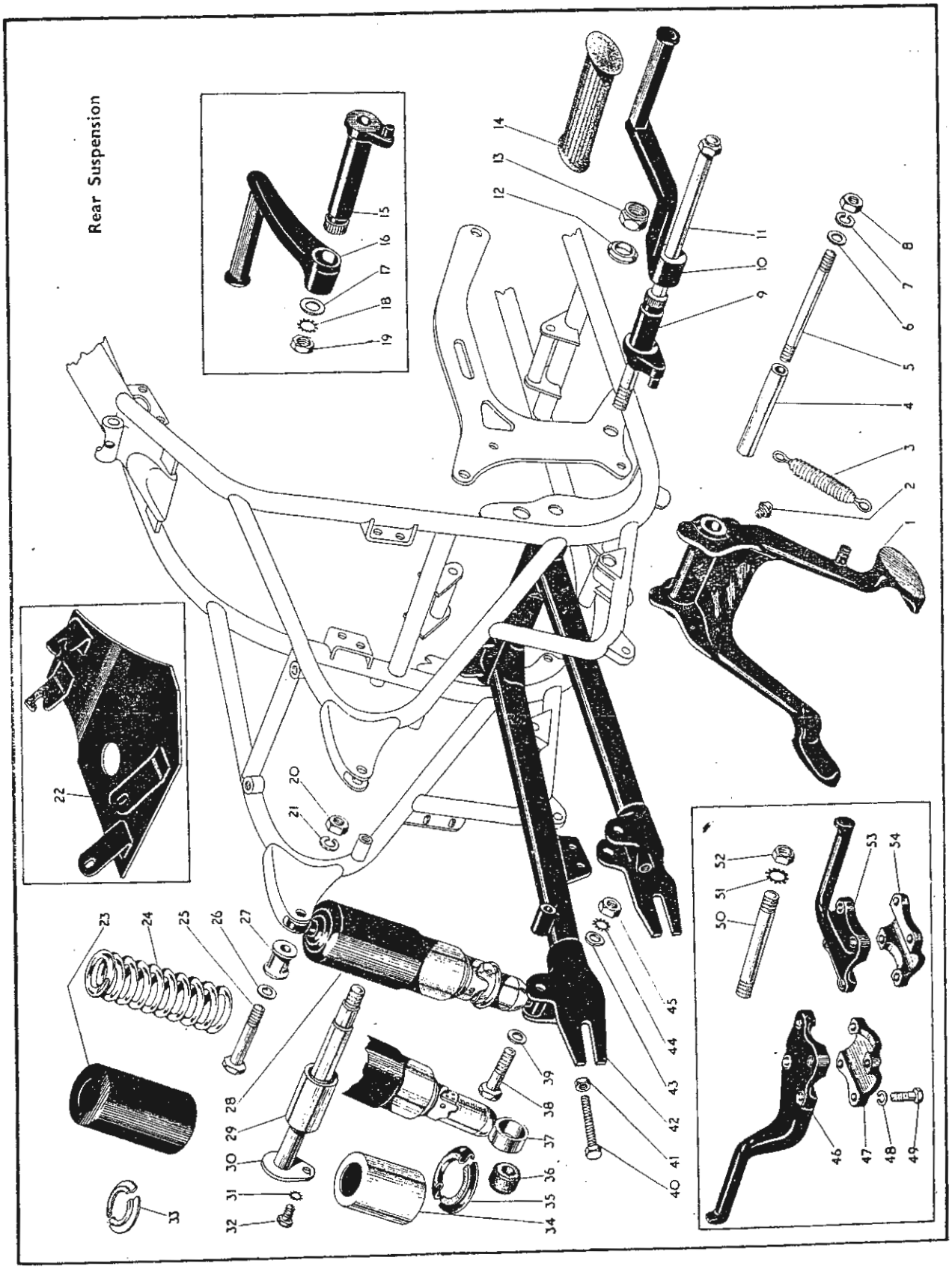

late 8—*continued.* REAR SUSPENSION

Gold Star 350c.c., and 500c.c.

ıte Ref. umber	Models.	Part No.	Description.	Number per set.
47	... 350c.c., 500c.c. Scrambles ...	42–4832	... Footrest locking cap (nearside) (when footrests in forward position)	1
48	... 350c.c., 500c.c. Scrambles ...	24–8784	... Footrest cap bolt washer (spring) (when footrests in forward position)	8
49	... 350c.c., 500c.c. Scrambles ...	2–2413	... Footrest cap bolt (when footrests in forward position) ...	8
50	... 350c.c., 500c.c. Scrambles ...	42–4816	... Rear engine plate stud (when footrests in forward position)	1
51	... 350c.c., 500c.c. Scrambles ...	65–695	... Rear engine plate stud washer (shakeproof) (when footrests in forward position)	2
52	... 350c.c., 500c.c. Scrambles ...	15–5753	... Rear engine plate stud nut (when footrests in forward position)	2
53	... 350c.c., 500c.c. Scrambles ...	42–4831	... Footrest (offside) (when footrests in forward position) ...	1
54	... 350c.c., 500c.c. Scrambles ...	42–4833	... Footrest locking cap (offside) (when footrests in forward position)	1

late 9 FRONT FORK and FITTINGS

Gold Star 350c.c. and 500c.c.

ıte Ref. umber.	Model.	Part No.	Description.	Number per set.
—	... 350c.c., 500c.c. Trials and Scrambles ...	42–5003	... Front fork complete assembled (7″ brake)	1
—	... 350c.c., 500c.c. Clubmans and Road Racing ...	42–5002	... Front fork complete assembled (8″ brake)	1
—	... 350c.c., 500c.c. Clubmans and Road Racing ...	42–5022	... Front fork complete assembled (2 piece handlebar) ...	1
1	... 350c.c., 500c.c. ...	65–5295	... Fork end bolt (nearside)	1
2	... 350c.c., 500c.c. ...	2–2903	... Fork end bolt spring washer	1
3	... 350c.c., 500c.c. ...	2–292	... Fork end drain plug washer	2
4	... 350c.c., 500c.c. ...	2–1309	... Fork end drain plug	2
5	... 350c.c., 500c.c. ...	67–5057	... Front fork sliding tube (nearside)	1
5	... 350c.c., 500c.c. Trials and Scrambles ...	65–5408	... Front fork sliding tube (nearside) (7″ brake)	1
6	... 350c.c., 500c.c. ...	65–5424	... Front fork top bearing	2
7	... 350c.c., 500c.c. ...	29–5320	... Front fork top bearing circlip	2
8	... 350c.c., 500c.c. ...	29–5313	... Front fork oil seal	2
9	... 350c.c., 500c.c. ...	29–5310	... Front fork oil seal holder	2
10	... 350c.c., 500c.c. ...	65–5390	... Front fork spring	2
11	... 350c.c., 500c.c. ...	67–5042	... Front fork outer sleeve (nearside)	1
12	... 350c.c., 500c.c. ...	29–5283	... Front fork shaft plug	2
13	... 350c.c., 500c.c. ...	29–5338	... Front fork shaft plug washer	2
14	... 350c.c., 500c.c. ...	29–5347	... Front fork bottom bearing	2
15	... 350c.c., 500c.c. ...	89–5061	... Front fork shaft	2
16	... 350c.c., 500c.c. ...	27–5135	... Front fork top yoke clip bolt	1
17	... 350c.c., 500c.c. ...	65–5333	... Handlebar clip	2
18	... 350c.c., 500c.c. ...	15–5155	... Handlebar and yoke clip bolt washer	4
19	... 350c.c., 500c.c. ...	65–5334	... Handlebar and yoke clip bolt	2
20	... 350c.c., 500c.c. ...	65–5426	... Steering damper knob securing plate	1
21	... 350c.c., 500c.c. ...	2–6026	... Handlebar clip and damper knob securing plate bolt ...	2
22	... 350c.c., 500c.c. ...	2–370	... Handlebar clip and damper securing plate distance piece .	2
23	... 350c.c., 500c.c. ...	67–5024	... Steering stem adjusting sleeve cap	1
24	... 350c.c., 500c.c. ...	67–5023	... Steering stem adjusting sleeve	1
25	... 350c.c., 500c.c. ...	29–5315	... Front fork top yoke clip bolt nut	1
26	... 350c.c., 500c.c. ...	65–5331	... Front fork tube nut	2
27	... 350c.c., 500c.c. ...	65–5332	... Front fork tube nut washer	2
28	... 350c.c., 500c.c. ...	42–5011	... Front fork top yoke	1
29	... 350c.c., 500c.c. ...	66–5204	... Steering head dust cap...	1
30	... 350c.c., 500c.c. ...	65–5126	... Steering head ballrace cone (top)	1
31	... 350c.c., 500c.c. ...	¼″ diam.	... Steering head balls	40
32	... 350c.c., 500c.c. ...	65–5127	... Steering head ballrace (bottom)	1
33	... 350c.c., 500c.c. ...	2–204	... Steering lock stop bolt	2
34	... 350c.c., 500c.c. ...	2–2395	... Steering lock stop locking nut	2
35	... 350c.c., 500c.c. Clubmans and Road Racing ...	42–5015	... Front fork bottom yoke	1
35	... 350c.c., 500c.c. Trials and Scrambles ...	42–5012	... Front fork bottom yoke	1

Plate 9

FRONT FORK and FITTINGS

350c.c. and 500c.c. Gold Star

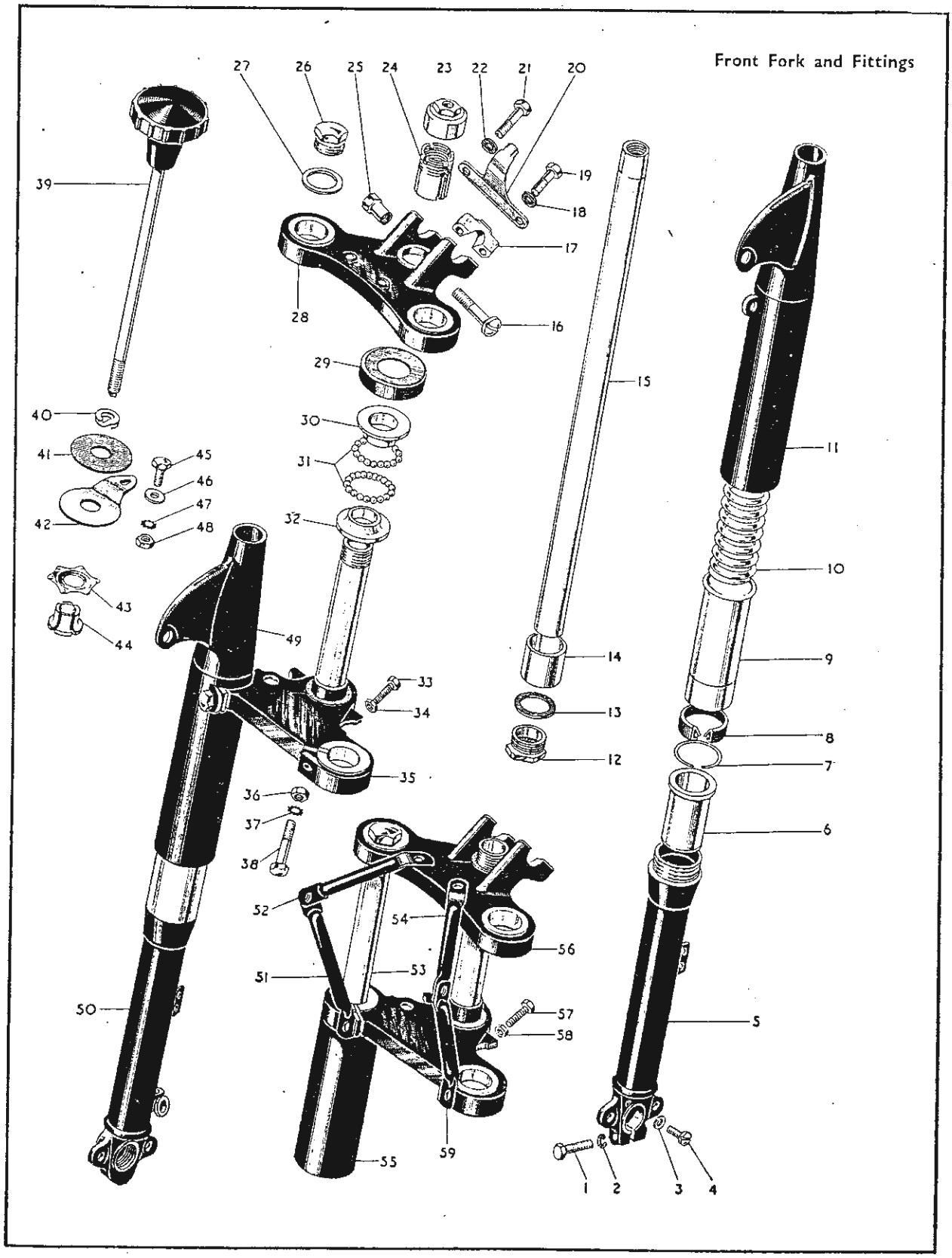

Plate 9—*continued.* FRONT FORK and FITTINGS

Gold Star 350c.c., and 500c.c.

Plate Ref. Number.	Models.	Part No.	Description.	Number per set.
36	350c.c., 500c.c.	24–5160	Bottom yoke bolt nut	2
37	350c.c., 500c.c.	36–382	Bottom yoke bolt washer (shakeproof)	2
38	350c.c., 500c.c.	29–5289	Bottom yoke bolt	2
39	350c.c., 500c.c.	67–5021	Steering damper adjusting rod	1
40	350c.c., 500c.c.	24–6035	Steering damper knob spring washer	1
41	350c.c., 500c.c.	65–5380	Steering damper friction washer	1
42	350c.c., 500c.c.	42–5014	Steering damper anchor plate	1
43	350c.c., 500c.c.	25–5247	Steering damper star washer	1
44	350c.c., 500c.c.	65–5328	Steering damper centre	1
45	350c.c., 500c.c.	28–2338	Steering damper anchor plate bolt	1
46	350c.c., 500c.c.	2–923	Steering damper anchor plate bolt washer	1
47	350c.c., 500c.c.	36–382	Steering damper anchor plate bolt washer (shakeproof)	1
48	350c.c., 500c.c.	2–49	Steering damper anchor plate bolt nut	1
49	350c.c., 500c.c.	67–5044	Fork outer sleeve (offside)	1
50	350c.c., 500c.c. Trials and Scrambles	65–5410	Fork sliding tube (offside) (7″ brake)	1
50	350c.c., 500c.c. Clubmans and Road Racing	65–5420	Fork sliding tube (offside) (8″ brake)	1
51	350c.c., 500c.c.	42–5029	Lamp bracket (bottom) (offside)	1
52	350c.c., 500c.c.	42–5028	Lamp bracket (top) (offside)	1
53	350c.c., 500c.c.	42–5027	Front fork shaft	2
54	350c.c., 500c.c.	42–5030	Lamp bracket (top) (nearside)	1
55	350c.c., 500c.c.	42–5024	Front fork spring cover	2
56	350c.c., 500c.c.	42–5011	Front fork top yoke	1
57	350c.c., 500c.c.	2–204	Steering lock stop bolt	2
58	350c.c., 500c.c.	2–2395	Steering lock stop bolt nut	2
59	350c.c., 500c.c.	42–5031	Lamp bracket (bottom) (nearside)	1

Plate 10 FRONT HUB and WHEEL FITTINGS (7″ Brake)

Gold Star 350c.c. 500c.c. Trials and Scrambles.

Plate Ref. Number.	Model.	Part No.	Description.	Number per set.
—	350c.c., 500c.c. Trials	65–5915	Front wheel complete (less brake and tyre) (WM1–21)	1
—	350c.c., 500c.c. Scrambles	42–5522	Front wheel complete (less brake and tyre) (WM1–21)	1
1	350c.c., 500c.c. Trials	65–5537	Front wheel spoke (long)	20
	350c.c., 500c.c. Scrambles	42–5524	Front wheel spoke (long)	20
2	350c.c., 500c.c. Trials	27–6810	Front wheel spoke nipple	20
	350c.c., 500c.c. Scrambles	27–6808	Front wheel spoke nipple	20
3	350c.c., 500c.c. Trials and Scrambles	65–5929	Front hub spindle	1
4	350c.c., 500c.c. Trials and Scrambles	65–5892	Front hub spindle distance piece	1
5	350c.c., 500c.c. Trials and Scrambles	65–5893	Front brake cover plate nut	1
6	350c.c., 500c.c. Trials and Scrambles	65–5890	Front hub diatance collar	1
7	350c.c., 500c.c. Trials and Scrambles	65–5888	Front hub felt washer retaining cup	1
8	350c.c., 500c.c. Trials and Scrambles	65–5886	Front hub washer (felt)	1
9	350c.c., 500c.c. Trials and Scrambles	65–5887	Front hub felt washer retaining ring	1
10	350c.c., 500c.c. Trials and Scrambles	65–5883	Front hub ball journal	1
11	350c.c., 500c.c. Trials and Scrambles	65–5889	Front hub spindle sleeve	1
12	350c.c., 500c.c. Trials	65–5876	Front hub shell complete (with spindle and bearings)	1
	350c.c., 500c.c. Scrambles	42–5525	Front hub shell complete (with spindle and bearings)	1
13	350c.c., 500c.c. Trials and Scrambles	15–5290	Front hub grease nipple	1
14	350c.c., 500c.c. Trials and Scrambles	65–5884	Front hub bearing thrust washer	1
15	350c.c., 500c.c. Trials and Scrambles	65–5883	Front hub ball journal	1
16	350c.c., 500c.c. Trials and Scrambles	65–5885	Front hub bearing retaining ring	1
17	350c.c., 500c.c. Trials and Scrambles	65–5891	Front hub distance piece	1

Plate 10—*contd.* FRONT HUB and WHEEL FITTINGS (7″ Brake)

Gold Star 350c.c. 500c.c. Trials and Scrambles

Plate Ref. Number.	Models.	Part No.	Description.	Number per set.
18	350c.c., 500c.c. Trials	15–622	Front wheel spoke (short)	20
	350c.c., 500c.c. Scrambles	31–6015	Front wheel spoke (short)	20
19	350c.c., 500c.c. Trials	27–6810	Front wheel spoke nipple	20
	350c.c., 500c.c. Scrambles	27–6808	Front wheel spoke nipple	20
20	350c.c., 500c.c. Trials	65–5916	Front wheel rim (WM1–21)	1
	350c.c., 500c.c. Scrambles	42–5523	Front wheel rim (WM1–21)	1
21	350c.c., 500c.c. Trials and Scrambles	65–5899	Front brake shoe fulcrum pin	1
22	350c.c., 500c.c. Trials and Scrambles	35–6436	Front brake shoe lining rivet	14
23	350c.c., 500c.c. Trials and Scrambles	65–5903	Front brake shoe lining	2
24	350c.c., 500c.c. Trials and Scrambles	65–5901	Front brake shoe with lining	2
25	350c.c., 500c.c. Trials and Scrambles	65–5895	Front brake cover plate complete	1
26	350c.c., 500c.c. Trials and Scrambles	65–5893	Front brake cover plate nut	1
27	350c.c., 500c.c. Trials and Scrambles	24–8045	Front brake fulcrum pin serrated washer	1
28	350c.c., 500c.c. Trials and Scrambles	24–5860	Front brake fulcrum pin nut	1
29	350c.c., 500c.c. Trials and Scrambles	15–431	Front brake shoe cam washer (plain)	1
30	350c.c., 500c.c. Trials and Scrambles	66–4708	Front brake shoe cam washer (shakeproof)	1
31	350c.c., 500c.c. Trials and Scrambles	2–440	Front brake shoe cam nut	1
32	350c.c., 500c.c. Trials and Scrambles	29–5871	Front brake lever toggle	1
33	350c.c., 500c.c. Trials and Scrambles	2–510	Front brake lever toggle screw	1
34	350c.c., 500c.c. Trials and Scrambles	65–5907	Front brake operating lever	1
35	350c.c., 500c.c. Trials and Scrambles	2–1462	Front brake lever toggle washer (spring)	1
36	350c.c., 500c.c. Trials and Scrambles	2–443	Front brake lever toggle nut	1
37	350c.c., 500c.c. Trials and Scrambles	65–5674	Front brake shoe cam bearing oil hole clip	1
38	350c.c., 500c.c. Trials and Scrambles	65–5904	Front brake shoe spring	2
39	350c.c., 500c.c. Trials and Scrambles	65–5905	Front brake shoe cam complete	1

Plate 11 FRONT HUB and WHEEL FITTINGS (8″ Brake)

Gold Star 350c.c. 500c.c. Road Trim, Clubmans and Road Racing.

Plate Ref. Number	Models.	Part No.	Description.	Number per set.
—	350c.c., 500c.c. Road Trim Clubmans and Road Racing	42–5507	Front wheel complete (less brake and tyre) (WM1–19)	1
—	350c.c., 500c.c. Road Trim Clubmans and Road Racing	42–5508	Front wheel complete (less brake and tyre) (WM1–19)	*as reqd.*
—	350c.c., 500c.c. Road Trim Clubmans and Road Racing	65–5925	Front wheel complete (less brake and tyre) (WM1–21)	1
—	350c.c., 500c.c. Road Trim Clubmans and Road Racing	65–5935	Front wheel complete (less brake and tyre) (WM1–21)	*as reqd.*
1	350c.c., 500c.c. Road Trim Clubmans and Road Racing	67–5544	Front wheel spoke (short) (19″ wheel)	20
1	350c.c., 500c.c. Road Trim Clubmans and Road Racing	24–7014	Front wheel spoke (short) (21″ wheel)	20
2	350c.c., 500c.c. Road Trim Clubmans and Road Racing	27–6810	Front wheel spoke nipple	40
3	350c.c., 500c.c. Road Trim Clubmans and Road Racing	67–5566	Front hub spindle	1
4	350c.c., 500c.c. Road Trim Clubmans and Road Racing	67–5561	Front hub bearing locking ring (nearside)	1

FRONT HUB and WHEEL FITTINGS

Plate 10
Gold Star Road Trim, Clubmans and Road Racing (7in. brake)

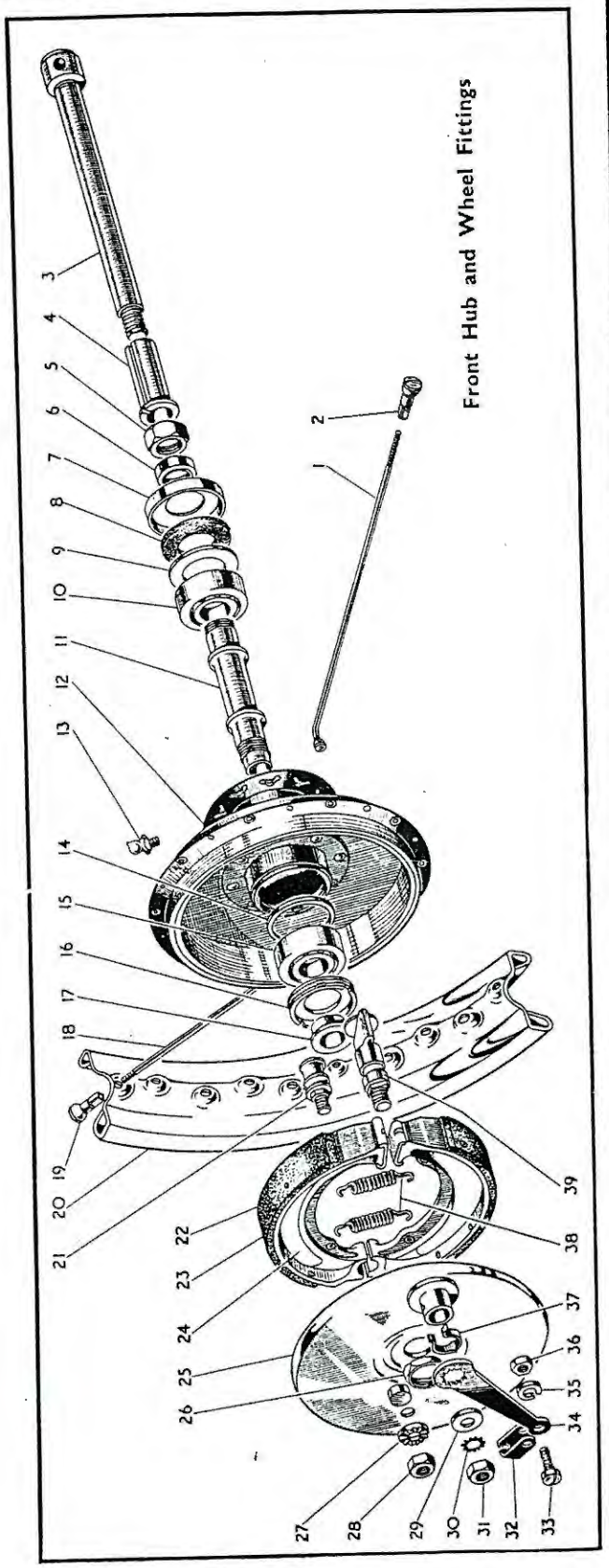

Plate 11
Gold Star Trials and Scrambles (8in. brake)

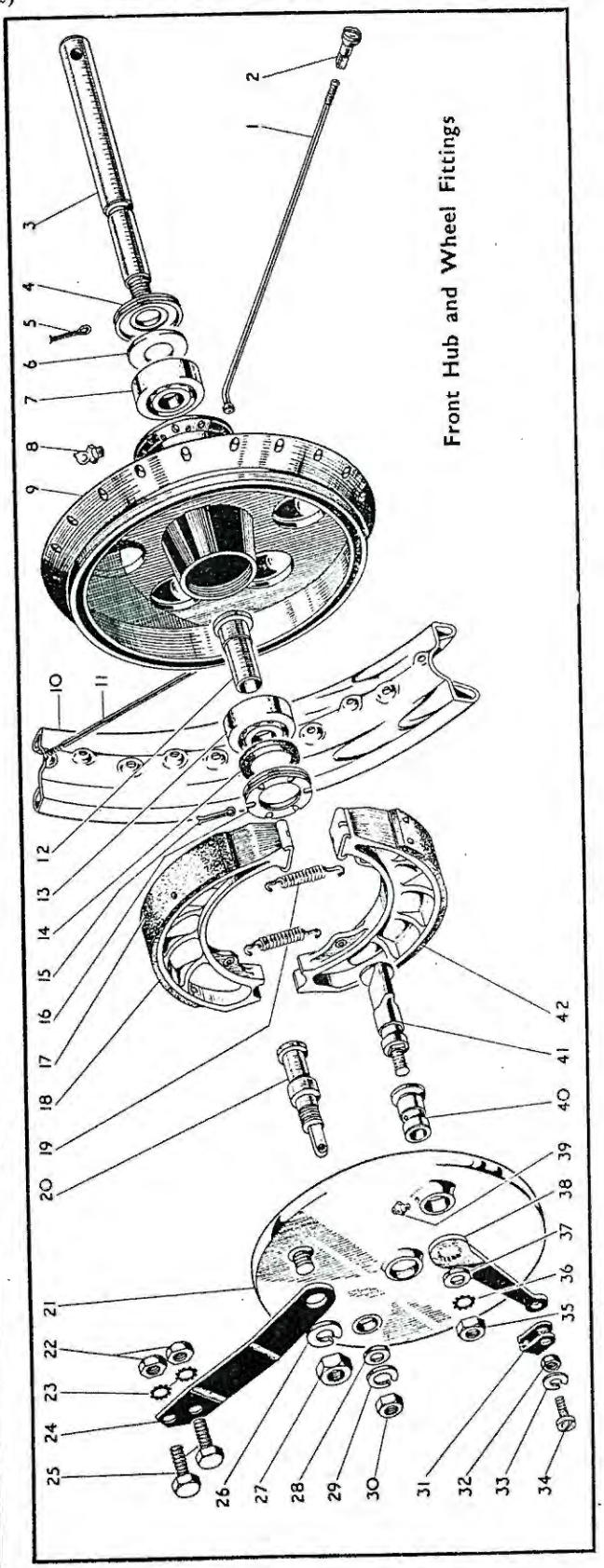

Plate 11—*contd.* FRONT HUB and WHEEL FITTINGS (8″ Brake)

Gold Star 350c.c. 500c.c. Road Trim, Clubmans and Road Racing

Plate Ref. Number.	Model.	Part No.	Description.	Number per set.
5	... 350c.c., 500c.c. Road Trim ... Clubmans and Road Racing	35–701	Front hub bearing locking ring retaining pin	1
6	... 350c.c., 500c.c. Road Trim ... Clubmans and Road Racing	67–5563	Front hub bearing oil retaining washer (nearside)	1
7	... 350c.c., 500c.c. Road Trim ... Clubmans and Road Racing	65–5883	Front hub ball journal	1
8	... 350c.c., 500c.c. Road Trim ... Clubmans and Road Racing	15–5290	Front hub grease nipple	1
9	... 350c.c., 500c.c. Road Trim ... Clubmans and Road Racing	67–5547	Front hub shell complete (with spindle sleeve and bearings)	1
10	... 350c.c., 500c.c. Road Trim ... Clubmans and Road Racing	42–5509	Front wheel rim (WM1–19)	1
10	... 350c.c., 500c.c. Road Trim ... Clubmans and Road Racing	42–5510	Front wheel rim (WM1–19)	*as reqd.*
10	... 350c.c., 500c.c. Road Trim ... Clubmans and Road Racing	65–5927	Front wheel rim (WM1–21)	1
10	... 350c.c., 500c.c. Road Trim ... Clubmans and Road Racing	65–5936	Front wheel rim (WM1–21)	*as reqd.*
11	... 350c.c., 500c.c. Road Trim ... Clubmans and Road Racing	67–5545	Front wheel spoke (long) (19″ wheel)	20
11	... 350c.c., 500c.c. Road Trim ... Clubmans and Road Racing	65–5926	Front wheel spoke (long) (21″ wheel)	20
12	... 350c.c., 500c.c. Road Trim ... Clubmans and Road Racing	67–5565	Front hub spindle sleeve	1
13	... 350c.c., 500c.c. Road Trim ... Clubmans and Road Racing	65–5883	Front hub ball journal	1
14	... 350c.c., 500c.c. Road Trim ... Clubmans and Road Racing	67–5564	Frong hub bearing oil retaining washer (offside)	1
15	... 350c.c., 500c.c. Road Trim ... Clubmans and Road Racing	35–701	Front hub bearing locking ring retaining pin	1
16	... 350c.c., 500c.c. Road Trim ... Clubmans and Road Racing	67–5562	Front hub bearing locking ring (offside)	1
17	... 350c.c., 500c.c. Road Trim ... Clubmans and Road Racing	67–5575	Front brake shoe lining rivet	14
18	... 350c.c., 500c.c. Road Trim ...	67–5571	Front brake shoe lining	2
18	.. 350c.c., 500c.c. Clubmans ... and Road Racing	67–5602	Front brake shoe lining	2
19	... 350c.c., 500c.c. Road Trim ... Clubmans and Road Racing	65–5904	Front brake shoe spring	2
20	... 350c.c., 500c.c. Road Trim ... Clubmans and Road Racing	67–5576	Front brake fulcrum and adjusting pin	1
21	... 350c.c., 500c.c. Road Trim ... Clubmans and Road Racing	67–5555	Front brake cover plate with fixed fittings	1
22	... 350c.c., 500c.c. Road Trim ... Clubmans and Road Racing	2–49	Front brake anchor strap nut	2
23	... 350c.c., 500c.c. Road Trim ... Clubmans and Road Racing	36–382	Front brake anchor strap washer (shakeproof)	2
24	... 350c.c., 500c.c. Road Trim ... Clubmans and Road Racing	42–5520	Front brake anchor strap	1
25	... 350c.c., 500c.c. Road Trim ... Clubmans and Road Racing	32–194	Front brake anchor strap bolt	2
26	... 350c.c., 500c.c. Road Trim ... Clubmans and Road Racing	15–716	Front brake cam plate and anchor strap washer (spring)	1
27	... 350c.c., 500c.c. Road Trim ... Clubmans and Road Racing	15–541	Front brake cover plate and anchor strap nut	1
28	... 350c.c., 500c.c. Road Trim ... Clubmans and Road Racing	25–6014	Front brake fulcrum and adjusting pin washer (plain)	1
29	... 350c.c., 500c.c. Road Trim ... Clubmans and Road Racing	35–37	Front brake fulcrum and adjusting pin washer (spring)	1
30	... 350c.c., 500c.c. Road Trim ... Clubmans and Road Racing	2–2527	Front brake fulcrum and adjusting pin nut	1
31	... 350c.c., 500c.c. Road Trim ... Clubmans and Road Racing	29–5871	Front brake lever toggle	1
32	... 350c.c., 500c.c. Road Trim ... Clubmans and Road Racing	2–443	Front brake lever toggle nut	1
33	... 350c.c., 500c.c. Road Trim ... Clubmans and Road Racing	2–1462	Front brake lever toggle washer	1
34	... 350c.c., 500c.c. Road Trim ... Clubmans and Road Racing	2–510	Front brake lever toggle screw	1
35	... 350c.c., 500c.c. Road Trim ... Clubmans and Road Racing	2–440	Front brake shoe cam nut	1

Plate 11—*contd.* FRONT HUB and WHEEL FITTINGS (8″ Brake)

Gold Star 350c.c. 500c.c. Road Trim, Clubmans and Road Racing

Plate Ref. Number.	Model.	Part No.	Description.	Number per set.
36	... 350c.c., 500c.c. Road Trim ... Clubmans and Road Racing	66–4708	Front brake shoe cam washer (shakeproof)	1
37	... 350c.c., 500c.c. Road Trim ... Clubmans and Road Racing	15–431	Front brake shoe cam washer (plain)	1
38	... 350c.c., 500c.c. Road Trim ... Clubmans and Road Racing	65–5907	Front brake operating lever	1
39	... 350c.c., 500c.c. Road Trim ... Clubmans and Road Racing	28–2080	Front brake fulcrum pin grease nipple	1
40	... 350c.c., 500c.c. Road Trim ... Clubmans and Road Racing	67–5567	Front brake cam bearing	1
41	... 350c.c., 500c.c. Road Trim ... Clubmans and Road Racing	67–5572	Front brake shoe cam complete	1
42	... 350c.c., 500c.c. Road Trim ...	67–5558	Front brake shoe with lining ...	2
42	... 350c.c., 500c.c. Clubmans ... and Road Racing	67–5601	Front brake shoe with lining ...	2

Plate 12 REAR HUB and WHEEL FITTINGS

Gold Star 350c.c. 500c.c.

Plate Ref. Number.	Model.	Part No.	Description.	Number per set.
—	... 350c.c., 500c.c. Road Trim ... Clubmans and Road Racing	42–6004	Rear wheel complete (less brake and tyre) (WM2–19)	1
—	... 350c.c., 500c.c. Road Trim ... Clubmans and Road Racing	67–6177	Rear wheel complete (less brake and tyre) (WM2–19)	*as reqd.*
—	... 350c.c., 500c.c. Road Trim ... Clubmans and Road Racing	42–6007	Rear wheel complete (less brake and tyre) (WM2–18)	*as reqd.*
—	... 350c.c., 500c.c. Road Trim ... Clubmans and Road Racing	42–6009	Rear wheel complete (less brake and tyre) (WM2–18)	*as reqd.*
—	... 350c.c., 500c.c. Trials ... and Scrambles	42–6001	Rear wheel complete (less brake and tyre) (WM3–19)	1
1	... 350c.c., 500c.c. ...	2–440	Rear brake operating lever nut	1
2	... 350c.c., 500c.c. ...	66–4708	Rear brake operating lever washer (shakeproof)	1
3	... 350c.c., 500c.c. ...	15–431	Rear brake operating lever washer (plain) ...	1
4	... 350c.c., 500c.c. ...	65–5674	Cam bearing oil hole clip	1
5	... 350c.c., 500c.c. ...	21–431	Anchor strap bolt nut ...	1
6	... 350c.c., 500c.c. ...	2–130	Anchor strap bolt washer (plain)	1
7	... 350c.c., 500c.c. ...	42–6036	Rear brake anchor strap	1
8	... 350c.c., 500c.c. ...	35–698	Anchor strap bolt split pin	1
9	... 350c.c., 500c.c. ...	42–6037	Rear brake anchor strap bolt	1
10	... 350c.c., 500c.c. ...	42–6034	Rear brake cam	1
11	... 350c.c., 500c.c. ...	35–6436	Brake shoe lining rivet...	14
12	... 350c.c., 500c.c. Road Trim ... Trials and Scrambles	65–5903	Brake shoe lining	2
12	... 350c.c., 500c.c. Clubmans ... and Road Racing	65–5941	Brake shoe lining	2
13	... 350c.c., 500c.c. Road Trim ... Clubmans and Road Racing Trials	66–9160	Transmission chain (rear)	1
13	... 350c.c., 500c.c. Scrambles ...	66–9162	Transmission chain (rear)	1
14	... 350c.c., 500c.c. ...	65–5883	Rear hub ball bearing ...	1
15	... 350c.c., 500c.c. ...	67–6033	Hub ball journal shim ...	1
16	... 350c.c., 500c.c. ...	67–6034	Retaining spring ring ...	1
17	... 350c.c., 500c.c. ...	67–6030	Rear brake drum bearing sleeve	1
18	... 350c.c., 500c.c. ...	67–6101	Driving flange ...	1
19	... 350c.c., 500c.c. ...	65–5885	Hub ballrace retaining ring	1
20	... 350c.c., 500c.c. ...	27–6810	Rear wheel spoke nipple	40
21	... 350c.c., 500c.c. Road Trim ... Clubmans and Road Racing	42–6306	Rear wheel rim (WM2–19)	1
21	... 350c.c., 500c.c. Road Trim ... Clubmans and Road Racing	65–6308	Rear wheel rim (WM2–19)	*as reqd.*
21	... 350c.c., 500c.c. Road Trim ... Clubmans and Road Racing	42–6008	Rear wheel rim (WM2–18)	*as reqd.*
21	... 350c.c., 500c.c. Road Trim ... Clubmans and Road Racing	42–6010	Rear wheel rim (WM2–18)	*as reqd.*
21	... 350c.c., 500c.c. Trials ... and Scrambles	42–6002	Rear wheel rim (WM3–19)	1

Plate 12

REAR HUB and WHEEL FITTINGS

350c.c. and 500c.c. Gold Star (Swinging Arm)

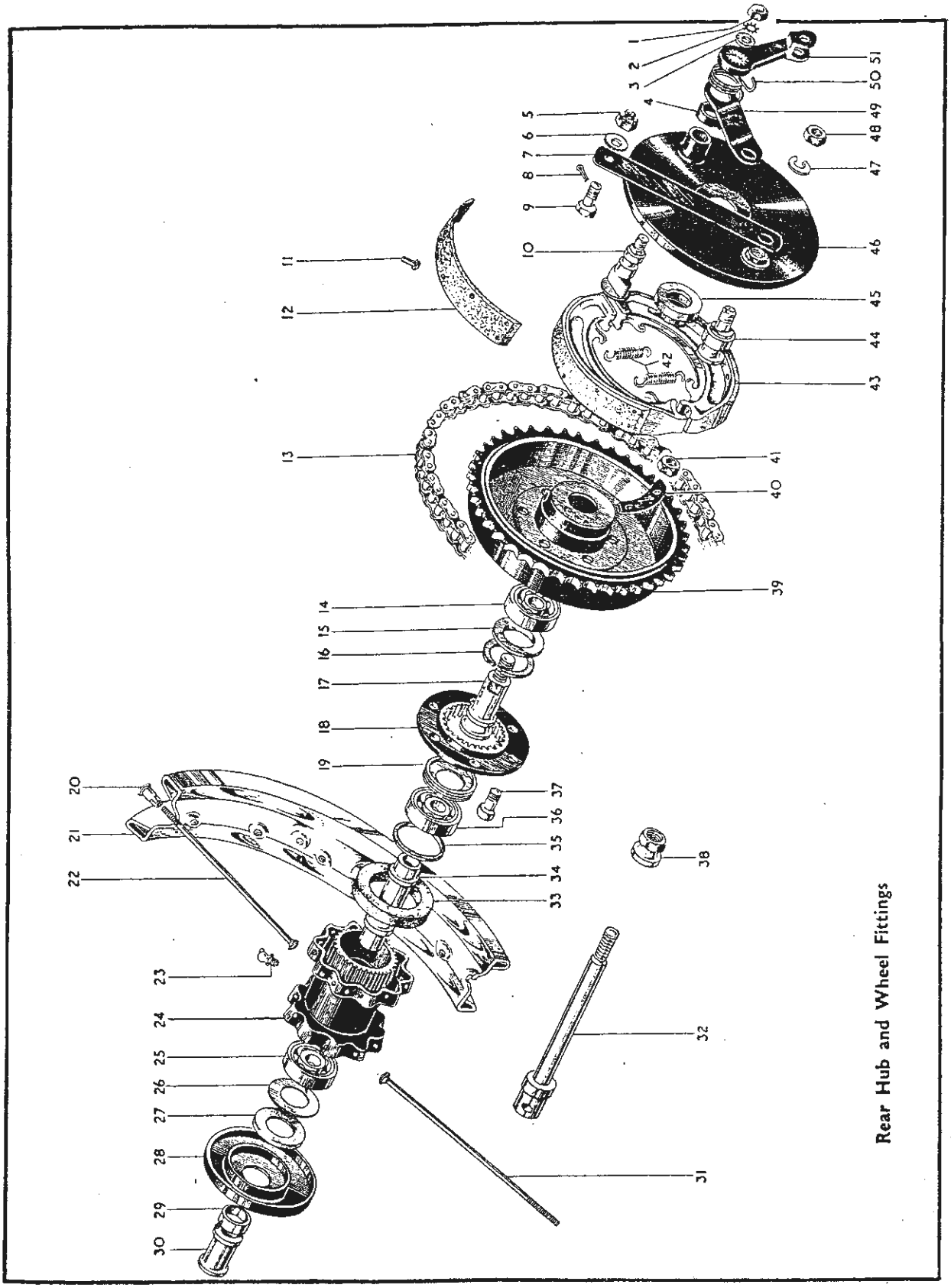

Rear Hub and Wheel Fittings

Rear Hub and Wheel Fittings
Mudguard, Chainguard, Tank and Rear Brake
Petrol Tank, Handlebars, Mudguard, Toolbox and Dual Seat
Handlebar, Footrest and Megaphone
Tools and Sundries, Electrical Equipment
Numerical Index

Plate 12—*continued.* REAR HUB and WHEEL FITTINGS

Gold Star 350c.c. 500c.c.

Plate Ref. Number.	Models.	Part No.	Description.	Number per set.
22	350c.c., 500c.c.	67-6017	Rear wheel spoke (nearside)	20
	350c.c., 500c.c. Road Trim Clubmans and Road Racing	42-6011	Rear wheel spoke (nearside)	20
23	350c.c., 500c.c.	15-5290	Rear hub grease nipple	1
24	350c.c., 500c.c.	67-6136	Rear hub shell complete with bearings	1
25	350c.c., 500c.c.	65-5883	Rear hub ball bearing	1
26	350c.c., 500c.c.	65-5887	Felt washer retaining ring	1
27	350c.c., 500c.c.	65-5886	Rear hub washer (felt)	1
28	350c.c., 500c.c.	67-6133	End cover	1
29	350c.c., 500c.c.	65-5890	Hub spindle distance collar	1
30	350c.c., 500c.c.	67-6028	Hub spindle distance sleeve	1
31	350c.c., 500c.c.	67-6016	Rear wheel spoke (offside)	20
31	350c.c., 500c.c. Road Trim Clubmans and Road Racing	42-6012	Rear wheel spoke (offside)	20
32	350c.c., 500c.c.	67-6161	Rear hub spindle	1
33	350c.c., 500c.c.	67-6051	Hub shell washer (rubber)	1
34	350c.c., 500c.c.	67-6027	Hub spindle sleeve	1
35	350c.c., 500c.c.	65-5884	Hub bearing thrust washer	1
36	350c.c., 500c.c.	65-5883	Rear hub ball bearing	1
37	350c.c., 500c.c.	67-6038	Brake drum securing bolt	6
38	350c.c., 500c.c.	67-6031	Rear hub spindle nut	1
39	350c.c., 500c.c. Road Trim Clubmans and Road Racing and Trials	42-6024	Rear brake drum and chainwheel (42T)	1
39	350c.c., 500c.c. Scrambles	42-6025	Rear brake drum and chainwheel (46T)	1
40	350c.c., 500c.c.	67-6039	Brake drum bolt locking strip	3
41	350c.c., 500c.c.	3-720	Rear wheel securing bolt	6
42	350c.c., 500c.c.	65-5904	Rear brake spring	2
43	350c.c., 500c.c. Road Trim Trials and Scrambles	65-5901	Rear brake shoe complete	2
43	350c.c., 500c.c. Clubmans and Road Racing	65-5940	Rear brake shoe complete	2
44	350c.c., 500c.c.	42-6033	Rear brake fulcrum pin	1
45	350c.c., 500c.c.	67-6032	Rear hub collar	1
46	350c.c., 500c.c.	42-6030	Rear brake cover plate complete with fixed fittings	1
47	350c.c., 500c.c.	65-5111	Rear brake fulcrum pin washer (spring)	1
48	350c.c., 500c.c.	24-7000	Rear brake fulcrum pin nut	1
49	350c.c., 500c.c.	67-6046	Rear brake outrigger strap	1
50	350c.c., 500c.c.	42-6046	Brake pedal return spring	1
51	350c.c., 500c.c.	42-6045	Rear brake operating lever	1

Plate 13

Mudguards, Chainguards, Oil Tank, Silencers and Rear Brake Control

Gold Star 350c.c. 500c.c.

Plate Ref. Number.	Model.	Part No.	Description.	Number per set.
1	350c.c., 500c.c.	42-7701/3	Rear chainguard complete	1
2	350c.c., 500c.c.	65-292	Rear chainguard fixing bolt	1
3	350c.c., 500c.c.	2-923	Rear chainguard fixing bolt washer (plain)	1
4	350c.c., 500c.c.	30-1194	Rear chainguard fixing bolt distance piece	1
5	350c.c., 500c.c.	2-49	Rear chainguard fixing bolt nut	1
6	350c.c., 500c.c.	24-8784	Rear chainguard fixing bolt washer (spring)	1
7	350c.c., 500c.c.	2-49	Rear chainguard long fixing bolt nut	1
8	350c.c., 500c.c.	24-8784	Rear chainguard long fixing bolt washer (spring)	1
9	350c.c., 500c.c.	2-353	Rear chainguard fixing bolt (short)	2
10	350c.c., 500c.c.	24-8784	Rear chainguard short fixing bolt washer (spring)	2
11	350c.c., 500c.c.	2-46	Rear brake pedal fulcrum pin nut	1
12	350c.c., 500c.c.	36-382	Rear brake pedal fulcrum pin tab washer	1
13	350c.c., 500c.c.	42-7012	Rear brake pedal fulcrum pin	1
14	350c.c., 500c.c. Clubmans and Road Racing	42-7005	Rear brake pedal complete	1
15	350c.c., 500c.c.	2-510	Rear brake rod toggle end screw	1
16	350c.c., 500c.c.	2-443	Rear brake rod toggle end screw nut	1
17	350c.c., 500c.c.	2-1934	Front stand fork end fixing bolt	2

Mudguards, Chainguards, Oil Tank, Silencers & Rear Brake Control

Gold Star 350c.c. 500c.c.

Plate Ref. Number.	Models.	Part No.	Description.	Number per set.
18	350c.c., 500c.c.	2–923	Front stand fork end fixing bolt washer (plain)	2
19	350c.c., 500c.c.	15–7354	Front mudguard stay fork end fixing bolt (when front stand is fitted)	2
20	350c.c., 500c.c.	2–923	Front mudguard stay fork end fixing bolt washer (plain) (when front stand is fitted)	2
22	350c.c., 500c.c.	2–1616	Front mudguard stay fork end fixing bolt nut (when front stand is fitted)	2
23	350c.c., 500c.c.	42–6513	Front stand complete (19″ wheel)	1
	350c.c., 500c.c.	67–6558	Front stand complete (21″ wheel)	1
24	350c.c., 500c.c.	24–8784	Front stand fork end fixing bolt washer (spring)	2
25	350c.c., 500c.c.	2–14	Front stand release bolt	1
26	350c.c., 500c.c.	2–2580	Front stand release bolt washer (thin)	1
27	350c.c., 500c.c.	2–1616	Front stand fork end fixing bolt nut	2
28	350c.c., 500c.c.	2–1462	Front mudguard centre stay fixing screw washer (spring)	2
29	350c.c., 500c.c.	2–2395	Front mudguard centre stay fixing screw nut	2
30	350c.c., 500c.c.	2–49	Front mudguard centre stay bolt nut	4
31	350c.c., 500c.c.	36–382	Front mudguard centre stay bolt washer (shakeproof)	4
32	350c.c., 500c.c.	42–6511	Front mudguard centre stay complete (19″ wheel)	1
	350c.c., 500c.c.	42–6505	Front mudguard centre stay complete (21″ wheel)	1
33	350c.c., 500c.c. Clubmans and Road Racing	2–2395	Front mudguard stay fixing screw nut	4
33	350c.c., 500c.c.	2–2395	Front mudguard stay fixing screw nut (when front stand is fitted)	2
34	350c.c., 500c.c. Clubmans and Road Racing	2–1462	Front mudguard stay fixing screw washer (spring)	4
34	350c.c., 500c.c.	2–1462	Front mudguard stay fixing screw washer (spring) (when front stand is fitted)	2
35	350c.c., 500c.c.	2–2395	Front number plate fixing stud nut	2
36	350c.c., 500c.c.	2–1462	Front number plate fixing stud washer (spring)	2
37	350c.c., 500c.c.	15–480	Front mudguard centre stay bolt (offside)	2
38	350c.c., 500c.c. Clubmans and Road Racing	42–6510	Front mudguard stay	2
38	350c.c., 500c.c.	42–6510	Front mudguard stay (19″ wheel) (when front stand is fitted)	1
38	350c.c., 500c.c.	65–6612	Front mudguard stay (21″ wheel) (when front stand is fitted)	1
39	350c.c., 500c.c. Clubmans and Road Racing	27–8560	Front mudguard stay fixing screw washer (plain)	4
39	350c.c., 500c.c.	27–8560	Front mudguard stay fixing screw washer (plain) (when front stand is fitted)	2
40	350c.c., 500c.c.	65–6576	Front number plate complete	1
41	350c.c., 500c.c. Clubmans and Road Racing	15–7161	Front mudguard stay fixing screw	4
41	350c.c., 500c.c.	15–7161	Front mudguard stay fixing screw (when front stand is fitted)	2
42	350c.c., 500c.c. Clubmans and Road Racing	42–6509	Front mudguard with fixed fittings	1
42	350c.c., 500c.c.	42–6509	Front mudguard with fixed fittings (19″ wheel) (when front stand is fitted)	1
42	350c.c., 500c.c.	42–6503	Front mudguard with fixed fittings (when 21″ wheel is fitted)	1
43	350c.c., 500c.c.	27–8560	Front mudguard centre stay fixing screw washer (plain)	2
44	350c.c., 500c.c.	15–7161	Front mudguard centre stay fixing screw	2
45	350c.c., 500c.c.	3–1156	Front mudguard centre stay bolt (nearside)	2
46	350c.c., 500c.c.	42–8334	Oil tank filter assembly	1
47	350c.c., 500c.c.	42–8343	Oil tank filter plug washer (fibre)	1
48	350c.c., 500c.c.	42–8367	Oil tank with fixed fittings	1
49	350c.c., 500c.c.	67–42	Oil tank filler cap washer (fibre)	1
50	350c.c., 500c.c.	65–8500	Oil tank filler cap	1
51	350c.c., 500c.c.	42–8342	Oil tank mounting strip (rubber)	4
52	350c.c., 500c.c.	29–5289	Oil tank top fixing bolt	1
53	350c.c., 500c.c.	2–537	Oil tank top fixing bolt washer (plain)	1
54	350c.c., 500c.c.	42–8339	Oil tank top fixing bolt distance tube	1
55	350c.c., 500c.c.	42–8331	Oil tank top fixing bolt spacing tube	1
56	350c.c., 500c.c.	15–203	Rocker feed pipe banjo washer (fibre)	1
57	350c.c., 500c.c.	42–8340	Rocker feed pipe banjo locknut	1
58	350c.c., 500c.c.	42–8326	Oil tank front fixing bolt complete	1
59	350c.c., 500c.c.	42–8341	Oil tank top fixing bolt mounting pad (rubber)	2
60	350c.c., 500c.c.	2–537	Oil tank top fixing bolt washer (plain)	1
61	350c.c., 500c.c.	2–49	Oil tank top fixing bolt nut	1
62	350c.c., 500c.c.	42–8329	Oil tank front fixing bolt saddle washer	1
63	350c.c., 500c.c.	42–8331	Oil tank front fixing bolt spacing tube	1
64	350c.c., 500c.c.	42–8330	Oil tank front fixing bolt bracket cup	1
65	350c.c., 500c.c.	42–8341	Oil tank front fixing bolt mounting pad (rubber)	1
66	350c.c., 500c.c.	2–537	Oil tank front fixing bolt washer (plain)	1
67	350c.c., 500c.c.	2–49	Oil tank front fixing bolt nut	1

Plate 13 Mudguard, Chainguard, Oil Tank, Silencers and Rear Brake Control

350c.c. and 500c.c. Gold Star

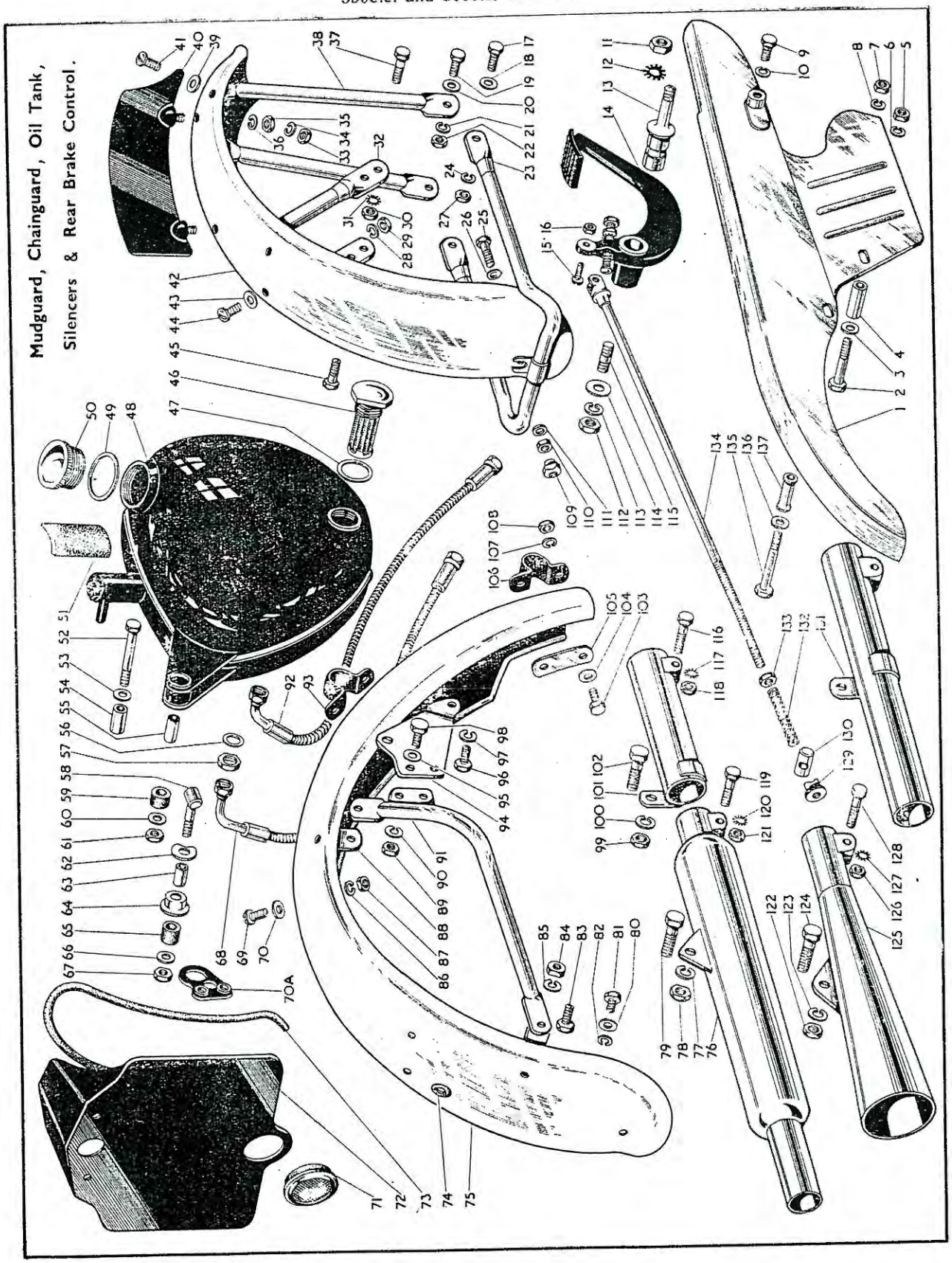

Mudguards, Chainguards, Oil Tank, Silencers & Rear Brake Control

Gold Star 355c.c. 500c.c.

Plate Ref. Number.	Models.	Part No.	Description.	Number per set.
68	350c.c., 500c.c.	42–8345	Oil tank return pipe (Armoured)	1
69	350c.c., 500c.c. Trials and Scrambles	15–7161	Rear mudguard bridge fixing screw (when saddle is fitted)	4
70	350c.c., 500c.c. Trials and Scrambles	27–8560	Rear mudguard bridge fixing screw washer (plain) (when saddle is fitted)	4
70A	350c.c., 500c.c.	42–8351	Oil tank fixing bracket	1
71	350c.c., 500c.c.	67–9067	Rear reflector	1
72	350c.c., 500c.c. Scrambles and Trials excepted	67–6830	Rear number plate complete	1
73	350c.c., 500c.c. Scrambles and Trials excepted	67–6851	Rear number plate rubber extrusion	1
74	350c.c., 500c.c.	67–6839	Rear mudguard tail lamp wiring grommet	1
75	350c.c., 500c.c. Trials and Scrambles	42–6845	Rear mudguard complete with fixed fittings	1
76	350c.c. Road Trim	42–2725	Silencer complete	1
76	350c.c., 500c.c. Clubmans and Road Trim	42–2730	Silencer complete	1
76	500c.c. Clubmans	42–2830	Silencer complete	1
76	350c.c. Trials	42–2782	Silencer complete	1
77	350c.c., 500c.c.	2–522	Silencer bracket fixing bolt washer (spring)	1
78	350c.c., 500c.c.	2–449	Silencer bracket fixing bolt nut	1
79	350c.c., 500c.c.	2–803	Silencer bracket fixing bolt	1
80	350c.c., 500c.c. Clubmans and Trials excepted	27–8560	Rear number plate fixing bolt washer (plain)	4
81	350c.c., 500c.c. Clubmans and Trials excepted	2–220	Rear number plate fixing bolt	4
82	350c.c., 500c.c. Clubmans and Trials excepted	2–1462	Rear number plate fixing bolt washer (spring)	4
83	350c.c., 500c.c.	24–6770	Rear mudguard stay bolt	4
84	350c.c., 500c.c.	2–49	Rear mudguard stay bolt nut	4
85	350c.c., 500c.c.	24–8784	Rear mudguard stay bolt washer (spring)	4
86	350c.c., 500c.c.	2–1462	Rear mudguard bridge fixing screw washer (spring) (when saddle is fitted)	4
87	350c.c., 500c.c.	2–2395	Rear mudguard bridge fixing screw nut (when saddle is fitted)	4
88	350c.c., 500c.c.	42–6832	Rear mudguard bridge	2
89	350c.c., 500c.c.	2–2395	Rear mudguard stay bracket bolt nut	4
90	350c.c., 500c.c.	2–1462	Rear mudguard stay bracket bolt washer (spring)	4
91	350c.c., 500c.c. Trials and Scrambles	42–6846	Rear mudguard stay complete (offside)	1
91	350c.c., 500c.c. Trials and Scrambles	42–6848	Rear mudguard stay complete (nearside)	1
92	350c.c., 500c.c.	42–8344	Oil tank feed pipe (Armoured)	1
93	350c.c., 500c.c. Trials and Scrambles	42–6785	Rear mudguard fixing clip (small)	1
94	350c.c., 500c.c.	42–6761	Rear mudguard stay bracket (offside)	1
94	350c.c., 500c.c.	42–6762	Rear mudguard stay bracket (nearside)	1
95	350c.c., 500c.c. Trials and Scrambles	2–923	Rear mudguard stay bracket bolt washer (plain)	4
96	350c.c., 500c.c. Trials and Scrambles	28–2338	Rear mudguard stay bracket bottom bolt	2
97	350c.c., 500c.c. Trials and Scrambles	24–8784	Rear mudguard stay bracket bottom bolt washer (spring)	2
98	350c.c., 500c.c. Trials and Scrambles	28–2338	Rear mudguard stay bracket bolt	4
99	350c.c., 500c.c.	2–449	Extension exhaust pipe bracket bolt nut	1
100	350c.c., 500c.c.	2–522	Extension exhaust pipe bracket bolt washer (spring)	1
101	350c.c. Clubmans	42–2720	Extension exhaust pipe complete	1
101	350c.c., 500c.c.	42–2710	Extension exhaust pipe complete	1
102	350c.c., 500c.c.	2–803	Extension exhaust pipe bracket bolt	1
103	350c.c., 500c.c. Trials and Scrambles	2–204	Rear mudguard fixing clip bolt	4
104	350c.c., 500c.c. Trials and Scrambles	27–8560	Rear mudguard fixing clip bolt washer (plain)	4
105	350c.c., 500c.c. Trials and Scrambles	42–6782	Rear mudguard fixing clip stiffening plate	2
106	350c.c., 500c.c. Trials and Scrambles	42–6759	Rear mudguard fixing clip (large)	1
107	350c.c., 500c.c. Trials and Scrambles	2–1462	Rear mudguard fixing clip bolt washer (spring)	4
108	350c.c., 500c.c. Trials and Scrambles	2–2395	Rear mudguard fixing clip bolt nut	4

Plate 13—*contd.* Mudguards, Chainguards, Oil Tank, Silencers & Rear Brake Control

Gold Star 350c.c. 550c.c.

Plate Ref. Number.	Models.	Part No.	Description.	Number per set.
109	350c.c., 500c.c.	15–447	Front stand release bolt nut	1
110	350c.c., 500c.c.	2–51	Front stand release bolt locknut	1
111	350c.c., 500c.c.	2–6537	Front stand release bolt washer (thick)	1
112	350c.c., 500c.c.	2–46	Rear brake pedal fulcrum pin nut	1
113	350c.c., 500c.c.	2–522	Rear brake pedal fulcrum pin washer (spring)	1
114	350c.c., 500c.c.	30–196	Rear brake pedal stud washer	1
115	350c.c., 500c.c.	67–4032	Rear brake pedal stud	1
116	350c.c., 500c.c.	24–7343	Extension exhaust pipe lug bolt	1
117	350c.c., 500c.c.	29–541	Extension exhaust pipe lug bolt washer (shakeproof)	1
118	350c.c., 500c.c.	2–2395	Extension exhaust pipe lug bolt nut	1
119	350c.c., 500c.c.	24–7343	Silencer inlet tube clip bolt	1
120	350c.c., 500c.c.	29–541	Silencer inlet tube clip bolt washer (shakeproof)	1
121	350c.c., 500c.c.	2–2395	Silencer inlet tube clip bolt nut	1
122	350c.c., 500c.c. Road Racing	2–449	Megaphone bracket fixing bolt nut	1
123	350c.c., 500c.c. Road Racing	2–522	Megaphone bracket fixing bolt washer (spring)	1
124	350c.c., 500c.c. Road Racing	2–803	Megaphone bracket fixing bolt	1
125	350c.c. Road Racing	42–2740	Megaphone complete	1
126	350c.c., 500c.c. Road Racing	2–2395	Megaphone inlet tube clip bolt nut	1
127	350c.c., 500c.c. Road Racing	29–541	Megaphone inlet tube clip bolt washer (shakeproof)	1
128	350c.c., 500c.c. Road Racing	24–7343	Megaphone inlet tube clip bolt	1
129	350c.c., 500c.c.	29–7368	Rear brake rod adjuster nut	1
130	350c.c., 500c.c.	65–6274	Rear brake lever swivel pin	1
131	350c.c., 500c.c. Scrambles	42–2710	Extension exhaust pipe complete	1
132	350c.c., 500c.c.	15–1312	Rear brake rod spring	1
133	350c.c., 500c.c.	2–2395	Rear brake rod spring nut	1
134	350c.c., 500c.c.	42–7007	Rear brake rod complete	1
135	350c.c., 500c.c.	33–4089	Rear chainguard fixing bolt (long)	1
136	350c.c., 500c.c.	2–923	Rear chainguard fixing bolt washer (plain)	1
137	350c.c., 500c.c.	42–7703	Rear chainguard fixing bolt distance tube (short)	1

Plate 14 Petrol Tank, Handlebar, Mudguards, Tool Box and Dual Seat

Gold Star 350c.c. 500c.c.

Plate Ref. Number.	Model.	Part No.	Description.	Number per set.
1	350c.c., 500c.c. Road Trim and Trials	42–7003	Rear brake pedal complete	1
1	350c.c., 500c.c. Scrambles	42–7024	Rear brake pedal complete	1
2	350c.c., 500c.c. Scrambles and Trials excepted	24–7148	Rear mudguard bottom bracket fixing bolt	2
3	350c.c., 500c.c. Scrambles and Trials excepted	42–6783	Rear mudguard bottom bracket stiffening plate	1
4	350c.c., 500c.c. Scrambles and Trials excepted	42–6831	Rear mudguard complete with fixed fittings	1
5	350c.c., 500c.c. Scrambles and Trials ecxepted	42–6782	Rear mudguard fixing clip stiffening plate	1
6	350c.c., 500c.c. Scrambles and Trials excepted	2–1462	Rear mudguard fixing clip bolt washer (spring)	2
7	350c.c., 500c.c. Scrambles and Trials excepted	2–2395	Rear mudguard fixing clip bolt nut	2
8	350c.c., 500c.c. Scrambles and Trials excepted	42–6834	Rear mudguard stay complete (nearside)	1
8	350c.c., 500c.c. Scrambles and Trials excepted	42–6836	Rear mudguard stay complete (offside)	1

Plate 14—*contd.* Petrol Tank, Handlebar, Mudguards, Tool Box & Dual Seat

Gold Star 350c.c. 500c.c.

Plate Ref. Number.	Models.	Part No.	Description.	Number per set.
9	350c.c., 500c.c. Scrambles and Trials excepted	42-6832	Rear mudguard bridge (bottom)	1
10	350c.c., 500c.c. Scrambles and Trials excepted	67-6839	Rear mudguard tail lamp wiring grommet	2
11	350c.c., 500c.c. Scrambles and Trials excepted	42-6832	Rear mudguard bridge (top)	1
12	350c.c., 500c.c.	24-563	Dual seat rear support bridge bolt nut	2
13	350c.c., 500c.c.	42-9061	Dual seat rear fixing bolt	2
14	350c.c., 500c.c.	2-923	Dual seat rear fixing bolt washer (plain)	2
15	350c.c., 500c.c.	35-33	Dual seat rear fixing bolt washer (spring)	2
16	350c.c., 500c.c.	24-8784	Dual seat rear support bridge bolt washer (spring)	2
17	350c.c., 500c.c.	42-9062	Dual seat rear support bridge	1
18	350c.c., 500c.c.	2-923	Dual seat rear support bridge bolt washer (plain)	2
19	350c.c., 500c.c.	15-7354	Dual seat rear support bridge bolt	2
20	350c.c., 500c.c.	42-9069	Dual seat complete with brackets	1
21	350c.c., 500c.c. Road Trim Trials and Scrambles	65-8503	Twist grip rubber grip	1
22	350c.c., 500c.c. Road Trim Trials and Scrambles	65-8504	Twist grip rotor and rotor sleeve complete	1
23	350c.c., 500c.c. Road Trim Trials and Scrambles	24-9570	Twist grip friction spring screw	1
24	350c.c., 500c.c. Road Trim Trials and Scrambles	24-9571	Twist grip friction spring screw locknut	1
25	350c.c., 500c.c. Road Trim Trials and Scrambles	24-9569	Twist grip friction spring	1
26	350c.c., 500c.c. Road Trim Trials and Scrambles	24-9573	Twist grip body screw	2
27	350c.c., 500c.c.	65-8505	Twist grip body (top half)	1
28	350c.c., 500c.c.	65-8506	Twist grip body (bottom half)	1
29	350c.c., 500c.c.	24-9572	Twist grip cable stop	1
30	350c.c., 500c.c. Road Trim Trials and Scrambles	65-8501	Throttle twist grip complete (less cable and cover)	1
31	350c.c., 500c.c. Road Trim Trials and Scrambles	29-8810	Front brake control complete (less cable and cover)	1
32	350c.c., 500c.c.	42-8010	Petrol tank rubber grommet	1
33	350c.c., 500c.c.	42-8011	Petrol tank front fixing bolt	1
34	350c.c., 500c.c.	2-1945	Petrol tank front fixing bolt washer (plain)	1
35	350c.c., 500c.c.	42-8012	Petrol tank mounting rubber (top)	1
36	350c.c., 500c.c. Scrambles and Trials excepted	42-8054/19	Petrol tank (4 gallons)	1
36	350c.c., 500c.c. Trials and Scrambles	42-8056/19	Petrol tank (2 gallons)	1
37	350c.c., 500c.c.	35-707	Petrol tank filler cap split pin	1
38	350c.c., 500c.c.	66-8351	Petrol tank filler cap	1
39	350c.c., 500c.c. Road Trim	67-8610	Front brake control cable and cover complete (8″ brake)	1
39	350c.c., 500c.c. Trials and Scrambles	65-8675	Front brake control cable and cover complete (7″ brake)	1
40	350c.c., 500c.c. Clubmans and Road Racing	42-4966	Handlebar (less controls)	1
40	350c.c., 500c.c. Trials and Scrambles	65-4960	Handlebar (less controls)	1
41	350c.c., 500c.c. Road Trim Trials and Scrambles	65-8836	Air control cable and cover complete	1
42	350c.c., 500c.c. Road Trim and Scrambles	65-8823	Throttle control cable and cover complete	1
42	350c.c., 500c.c. Trials	65-8832	Throttle control cable and cover complete	1
43	350c.c., 500c.c. Road Trim Trials and Scrambles	66-8896	Air control complete (less cable and cover)	1
44	350c.c., 500c.c. Road Trim Trials and Scrambles	65-8714	Ignition control cable and cover complete	1
45	350c.c., 500c.c. Road Trim Trials and Scrambles	66-8810	Ignition control complete (less cable and cover)	1
46	350c.c., 500c.c. Road Trim Trials and Scrambles	65-8502	Dummy grip (left-hand bar)	1
47	350c.c., 500c.c. Road Trim Trials and Scrambles	29-8820	Clutch control complete (less cable and cover)	1
48	350c.c., 500c.c. Road Trim Trials and Scrambles	42-8610	Exhaust control complete (less cable and cover)	1
49	350c.c., 500c.c. Road Trim Trials and Scrambles	42-8601	Exhaust control cable and cover complete	1
50	350c.c., 500c.c. Road Trim Trials and Scrambles	65-8680	Clutch control cable and cover complete	1

Petrol Ta
Handleb
Mudgua
Toolbox
Dual S.
Handleba
Pendrail a
Megapho
Tools and
Sundries.
Electrical
Equipmen
Number
Inde

Plate 14—*contd.* Petrol Tank, Handlebar, Mudguards, Tool Box & Dual Seat

Gold Star 350c.c. 500c.c.

Plate Ref. Number.	Models.	Part No.	Description.	Number per set.
51	350c.c., 500c.c.	27–8346	Petrol tank breather pipe union screw	1
52	350c.c., 500c.c.	65–8362	Petrol tank breather pipe complete	1
53	350c.c., 500c.c.	42–8034	Petrol tank badge clip screw nut	4
54	350c.c., 500c.c.	42–8020	Petrol tank badge clip	2
55	350c.c., 500c.c.	65–8193	Petrol tank badge	2
56	350c.c., 500c.c.	65–8317	Petrol tank badge clip screw	4
57	350c.c., 500c.c.	42–9038	Toolbox complete with fixed fittings	1
58	350c.c., 500c.c.	65–292	Toolbox top fixing bolt	1
59	350c.c., 500c.c.	24–8784	Toolbox top fixing bolt washer (spring)	1
60	350c.c., 500c.c.	42–8339	Toolbox top fixing bolt distance tube	1
61	350c.c., 500c.c.	42–8052	Petrol tank mounting rubber (anti-roll)	2
62	350c.c., 500c.c.	42–8051	Petrol tank mounting rubber (top tube)	2
63	350c.c., 500c.c.	42–8058	Petrol tank stiffening plate	1
64	350c.c., 500c.c.	2–923	Petrol tank stiffening plate stud washer (plain)	2
65	350c.c., 500c.c.	36–382	Petrol tank stiffening plate stud washer (shakeproof)	2
66	350c.c., 500c.c	2–49	Petrol tank stiffening plate stud nut	2
67	350c.c., 500c.c	27–5676	Toolbox top fixing bolt washer (plain)	1
68	350c.c., 500c.c.	2–49	Toolbox top fixing bolt nut	1
69	350c.c., 500c.c.	27–8443	Petrol tank filter complete (with twin feed)	2
70	350c.c., 500c.c.	24–8504	Petrol tank filter washer (fibre) (with twin feed)	2
71	350c.c., 500c.c. Scrambles and Trials excepted	25–7151	Float chamber flexible mounting bolt nut	2
72	350c.c., 500c.c. Scrambles and Trials excepted	24–7068	Float chamber flexible mounting bolt washer (spring)	2
73	350c.c., 500c.c. Scrambles and Trials excepted	1–4621	Float chamber flexible mounting bolt washer (plain)	2
74	350c.c., 500c.c. Scrambles and Trials excepted	2–370	Float chamber mounting bracket fixing bolt washer	1
75	350c.c., 500c.c. Scrambles and Trials excepted	2–49	Float chamber mounting bracket fixing bolt nut	2
76	350c.c., 500c.c. Scrambles and Trials excepted	42–9060	Dual seat front support pin	1
77	350c.c., 500c.c. Scrambles and Trials excepted	2–220	Dual seat front support pin securing bolt	1
78	350c.c., 500c.c. Scrambles and Trials excepted	65–8184	Petrol tap socket plug (for use when single petrol tap is used)	1
79	350c.c., 500c.c. Scrambles and Trials excepted	24–8504	Petrol tap socket plug washer (fibre) (for use when single petrol tap is used)	1
80	350c.c., 500c.c. Scrambles and Trials excepted	42–9058	Dual seat front support bracket	1
81	350c.c., 500c.c. Scrambles and Trials excepted	42–9057	Dual seat front support rubber	2
82	350c.c., 500c.c. Scrambles and Trials excepted	35–33	Dual seat front fixing bolt washer (spring)	2
83	350c.c., 500c.c. Scrambles and Trials excepted	2–923	Dual seat front fixing bolt washer (plain)	2
84	350c.c., 500c.c. Scrambles and Trials excepted	28–2338	Dual seat front fixing bolt	2
85	350c.c., 500c.c. Scrambles and Trials excepted	29–8814	Float chamber flexible mounting bolt nut	1
86	350c.c., 500c.c. Scrambles and Trials excepted	1–4606	Float chamber flexible mounting bolt	2
87	350c.c., 500c.c. Scrambles and Trials excepted	2–204	Rear mudguard fixing clip bolt	2
88	350c.c., 500c.c. Scrambles and Trials excepted	27–8560	Rear mudguard fixing clip bolt washer (plain)	2
89	350c.c. Scrambles and Trials excepted	42–6759	Rear mudguard fixing clip	1
90	500c.c. Scrambles and Trials excepted	42–8068	Float chamber support bracket adaptor	1
91	350c.c., 500c.c. Scrambles and Trials excepted	42–6833	Rear mudguard bottom bracket	1
92	350c.c., 500c.c. Scrambles and Trials excepted	27–8560	Rear mudguard bottom bracket fixing bolt washer (plain)	2
93	350c.c., 500c.c. Scrambles and Trials excepted	2–49	Rear mudguard bottom bracket fixing bolt nut	2
94	500c.c. Scrambles and Trials excepted	21–6191	Float chamber flexible mounting bolt	1
95	350c.c. Scrambles and Trials excepted	21–6189	Float chamber flexible mounting bolt	1
96	350c.c., 500c.c. Scrambles and Trials excepted	66–7518	Float chamber flexible mounting bolt washer (fibre)	1
97	350c.c., 500c.c. Scrambles and Trials excepted	21–5102	Float chamber flexible mounting bolt nut locknut	3

Plate 14 **Petrol Tank, Handlebar, Mudguards, Toolbox and Dual Seat**

350c.c. and 500c.c. Gold Star

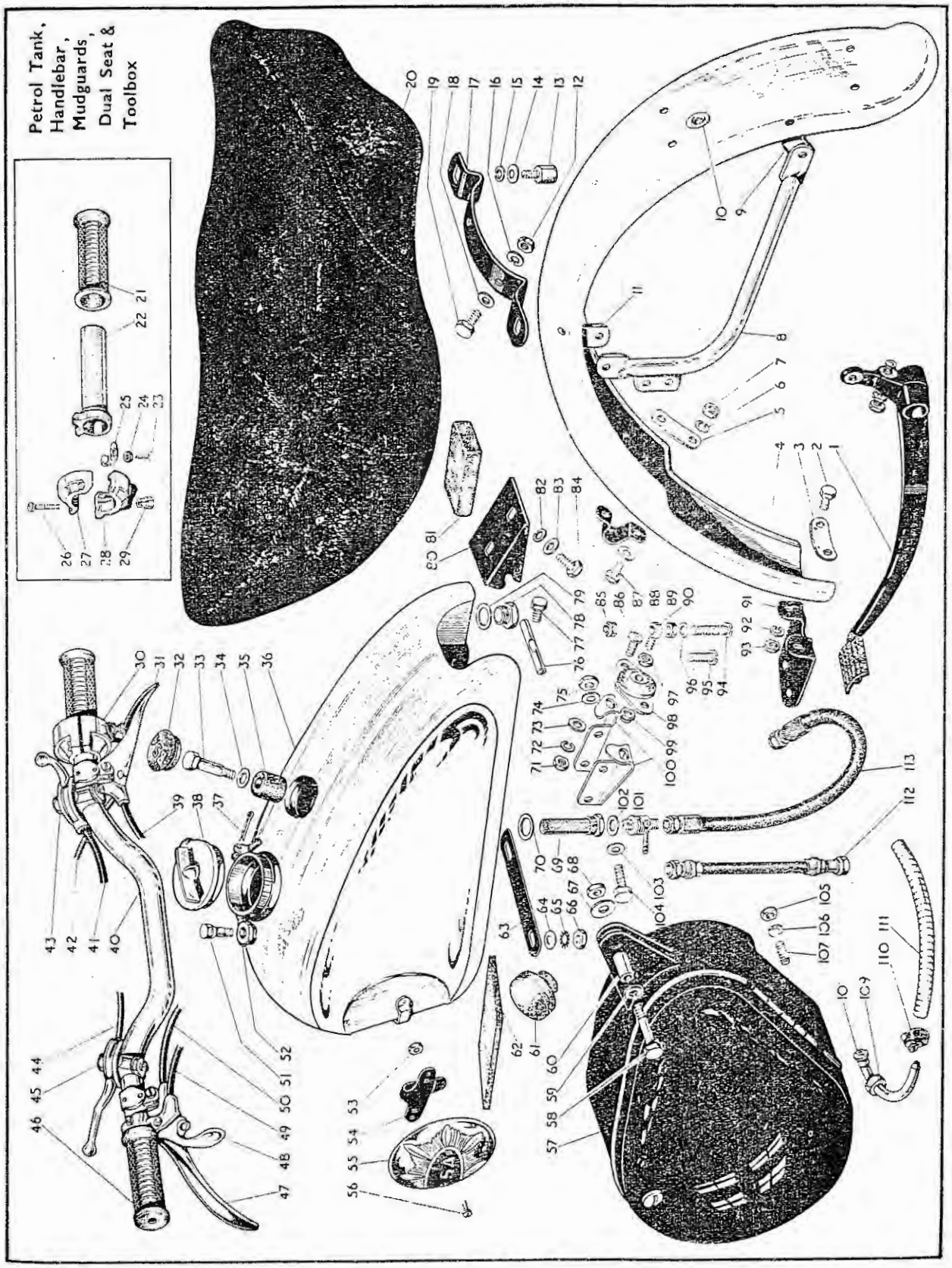

Handleba
Handrail
Megaph
Tools an
Sundries
Electrica
Equipme
Numer
Inde

Plate 14—*contd.* Petrol Tank, Handlebar, Mudguards, Tool Box & Dual Seat

Gold Star 350c.c. 500c.c.

Plate Ref. Number.	Models.	Part No.	Description.	Number per set.
98	350c.c., 500c.c. Scrambles and Trials excepted	42–8033	Float chamber flexible mounting	1
99	350c.c., 500c.c. Scrambles and Trials excepted	29–8814	Float chamber flexible mounting bolt nut	1
100	350c.c., 500c.c. Scrambles and Trials excepted	42–8066	Float chamber mounting bracket (right-hand)	1
100	350c.c., 500c.c. Scrambles and Trials excepted	42–8067	Float chamber mounting bracket (left-hand)	1
101	350c.c., 500c.c.	65–8171	Petrol tap (with twin feed)	2
102	350c.c., 500c.c.	2–930	Petrol tap washer (fibre) (with twin feed)	2
103	350c.c., 500c.c. Scrambles and Trials excepted	2–370	Float chamber mounting bracket fixing bolt washer (plain)	1
104	350c.c., 500c.c. Scrambles and Trials excepted	28–2338	Float chamber mounting bracket fixing bolt	2
105	350c.c., 500c.c.	2–49	Toolbox fixing stud nut	2
106	350c.c., 500c.c.	35–33	Toolbox fixing stud washer (spring)	2
107	350c.c., 500c.c.	42–4080	Toolbox fixing stud	2
108	350c.c., 500c.c.	42–8025	Copper petrol pipe complete	1
109	350c.c., 500c.c.	66–8332	Copper petrol pipe nut	1
110	350c.c., 500c.c.	42–8024	Petrol pipe hose clip	2
111	350c.c., 500c.c.	42–8023	Flexible petrol pipe (plastic) (remote float chamber to carburetter)	1
112	350c.c., 500c.c.	65–8173	Flexible petrol pipe (rubber) (nearside) (for use with twin-feed carburetter)	1
112	350c.c., 500c.c.	65–8173	Flexible petrol pipe (rubber) (for use with single feed carburetter)	1
113	350c.c., 500c.c.	42–8022	Flexible petrol pipe (rubber) (offside) (for use with twin-feed carburetter)	1
113	350c.c., 500c.c.	42–8022	Flexible petrol pipe (rubber) (tank to remote float chamber)	2

Plate 15 Handlebar and Controls (Western and 2 piece type) Dual Seat Handrail and Megaphone

Gold Star 350c.c. 500c.c.

Plate Ref. Number.	Model.	Part No.	Description.	Number per set.
1	350c.c., 500c.c. Clubmans and Road Racing	65–8503	Twist grip rubber grip	1
2	350c.c., 500c.c. Clubmans and Road Racing	19–2787	Twist grip rotor and rotor sleeve complete	1
3	350c.c., 500c.c. Clubmans and Road Racing	19–2788	Twist grip friction spring screw	1
4	350c.c., 500c.c. Clubmans and Road Racing	19–2791	Twist grip friction spring screw locknut	1
5	350c.c., 500c.c. Clubmans and Road Racing	24–9569	Twist grip friction spring	1
6	350c.c., 500c.c. Clubmans and Road Racing	19–2789	Twist grip adjusting stop screw	1
7	350c.c., 500c.c. Clubmans and Road Racing	19–2791	Twist grip adjusting stop screw locknut	1
8	350c.c., 500c.c. Clubmans and Road Racing	24–9573	Twist grip body screw	2
9	350c.c., 500c.c. Clubmans and Road Racing	19–2785	Twist grip body (top half)	1
10	350c.c., 500c.c. Clubmans and Road Racing	19–2786	Twist grip body (bottom half)	1
11	350c.c., 500c.c. Trials and Scrambles	15–7161	Rear number plate top fixing screw	2
12	350c.c., 500c.c. Trials and Scrambles	27–8560	Rear number plate top fixing screw washer (plain)	2
13	350c.c., 500c.c. Trials and Scrambles	90–6797	Rear number plate complete	1
14	350c.c., 500c.c. Trials and Scrambles	2–1462	Rear number plate top fixing screw washer (spring)	2
15	350c.c., 500c.c. Trials and Scrambles	2–2395	Rear number plate top fixing screw nut	2
16	350c.c., 500c.c. Clubmans and Road Racing	29–8814	Front brake and clutch control lever screw nut	2
17	350c.c., 500c.c. Clubmans and Road Racing	42–8678	Front brake and clutch control cable nipple adaptor	2

Plate 15 Handlebar and Controls (Western and 2 piece type) Dual Seat Handrail and Megaphone

Gold Star 350c.c. 500c.c.

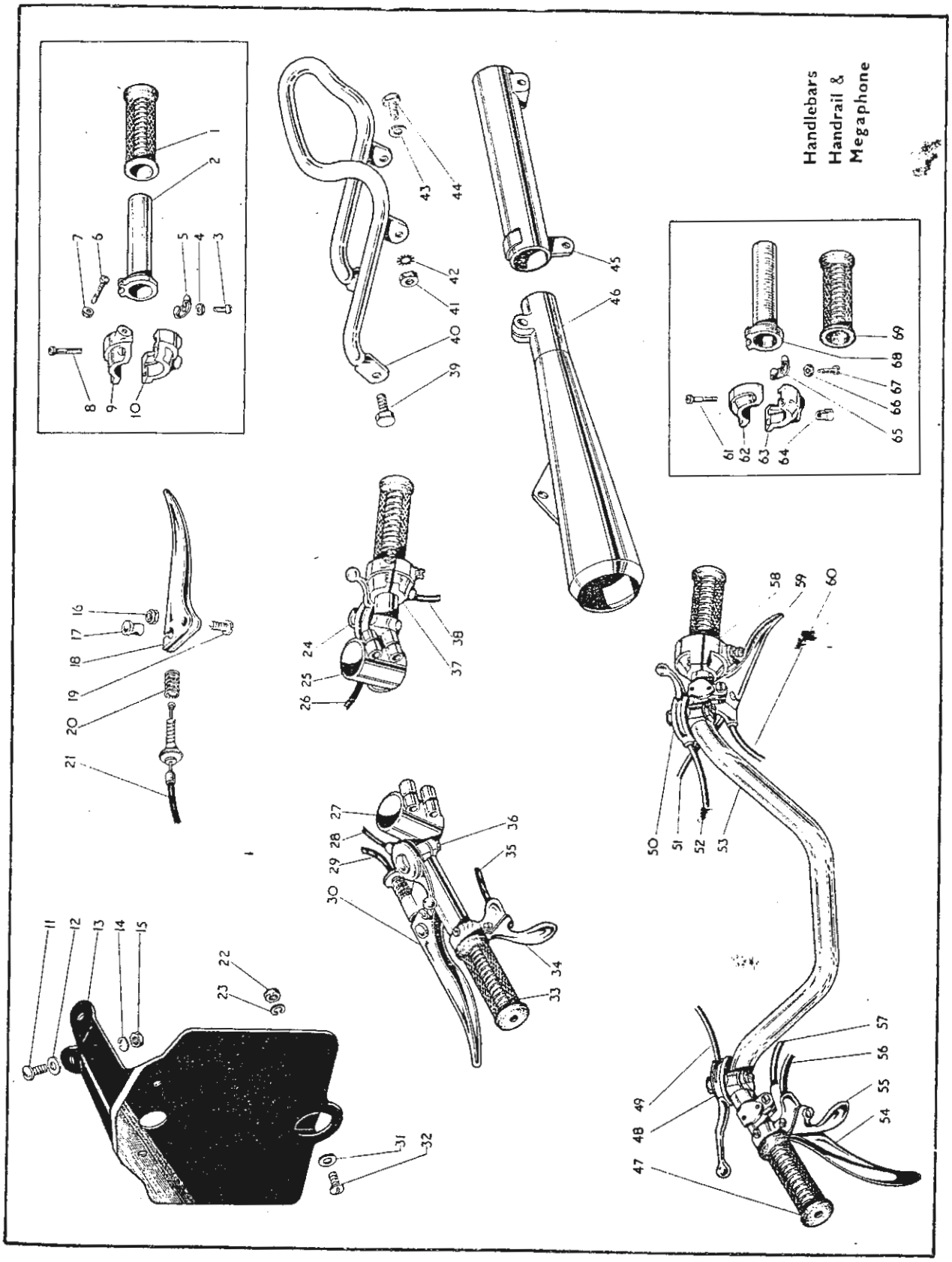

Plate 15—*contd.* Handlebar and Controls (Western and 2 piece type) Dual Seat Handrail and Megaphone

Gold Star 350c.c. 500c.c.

Plate Ref Number.	Models.	Part No.	Description.	Number per set.
18	350c.c., 500c.c. Clubmans and Road Racing	29–8812	Front brake control lever	1
19	350c.c., 500c.c. Clubmans and Road Racing	29–8813	Front brake and clutch control lever screw	2
20	350c.c., 500c.c. Clubmans and Road Racing	90–29	Front brake and clutch control cable adjusting spring	2
21	350c.c., 500c.c. Clubmans and Road Racing	42–8660	Front brake control cable and cover complete	1
22	350c.c., 500c.c. Trials and Scrambles	2–2395	Rear number plate bottom fixing screw nut	1
23	350c.c., 500c.c. Trials and Scrambles	2–1462	Rear number plate bottom fixing screw washer (spring)	1
24	350c.c., 500c.c. Clubmans and Road Racing	66–8896	Air control complete (less cable and cover)	1
25	350c.c., 500c.c. Clubmans and Road Racing	42–4972	Handlebar complete (offside) (less controls)	1
26	350c.c., 500c.c. Clubmans and Road Racing	65–8836	Air control cable and cover complete	1
27	350c.c., 500c.c. Clubmans and Road Racing	42–4970	Handlebar complete (nearside) (less controls)	1
28	350c.c., 500c.c. Clubmans and Road Racing	65–8714	Ignition control cable and cover complete	1
29	350c.c., 500c.c. Clubmans and Road Racing	42–8680	Clutch control cable and cover complete	1
30	350c.c, 500c.c. Clubmans and Road Racing	29–8812	Clutch control lever	1
31	350c.c., 500c.c. Trials and Scrambles	27–8560	Rear number plate bottom fixing screw washer (plain)	1
32	350c.c., 500c.c. Trials and Scrambles	15–7161	Rear number plate bottom fixing screw	1
33	350c.c., 500c.c. Clubmans and Road Racing	65–8502	Dummy grip (left-hand bar)	1
34	350c.c., 500c.c. Clubmans and Road Racing	42–8610	Exhaust control complete (less cable and cover)	1
35	350c.c., 500c.c. Clubmans and Road Racing	42–8601	Exhaust control cable and cover complete	1
36	350c.c., 500c.c. Clubmans and Road Racing	42–8615	Ignition control complete (less cable and cover)	1
37	350c.c., 500c.c. Clubmans and Road Racing	42–8621	Throttle twist grip complete (less cable and cover)	1
38	350c.c., 500c.c. Clubmans and Road Racing	65–8832	Throttle cable and cover complete	1
39	350c.c., 500c.c.	28–2338	Handrail stay bolt	2
40	350c.c., 500c.c.	42–9065	Dual seat handrail complete	1
41	350c.c., 500c.c.	2–49	Handrail mudguard bolt nut	2
42	350c.c., 500c.c.	36–382	Handrail mudguard bolt washer (shakeproof)	2
43	350c.c., 500c.c.	2–923	Handrail mudguard bolt washer (plain)	2
44	350c.c., 500c.c.	24–6770	Handrail mudguard bolt	2
45	500c.c. Clubmans	42–2808	Exhaust pipe extension complete	1
46	500c.c. Road Racing	42–2816	Megaphone complete	1
47	350c.c., 500c.c.	65–8502	Dummy grip (left-hand)	1
48	350c.c., 500c.c.	66–8810	Ignition control complete (less cable and cover)	1
49	350c.c., 500c.c.	65–8717	Ignition control cable and cover complete	1
50	350c.c., 500c.c.	66–8896	Air control complete (less cable and cover)	1
51	350c.c., 500c.c.	65–8832	Throttle cable and cover complete	1
52	350c.c., 500c.c.	65–8836	Air control cable and cover complete	1
53	350c.c., 500c.c.	65–4963	Handlebar (Western type) (less controls)	1
54	350c.c., 500c.c.	29–8820	Clutch control complete (less cable and cover)	1
55	350c.c., 500c.c.	42–8610	Exhaust control complete (less cable and cover)	1
56	350c.c., 500c.c.	42–8607	Exhaust control cable and cover complete	1
57	350c.c., 500c.c.	65–8683	Clutch control cable and cover complete	1
58	350c.c., 500c.c.	65–8501	Throttle twist grip (less cable and cover)	1
59	350c.c., 500c.c.	29–8810	Front brake control (less cable and cover)	1
60	350c.c., 500c.c. Clubmans and Road Racing	67–8607	Front brake cable and cover complete (8" brake)	1
61	350c.c., 500c.c.	24–9573	Twist grip body screw	2
62	350c.c., 500c.c.	65–8505	Twist grip body (top half)	1
63	350c.c., 500c.c.	65–8506	Twist grip body (bottom half)	1
64	350c.c., 500c.c.	24–9572	Twist grip cable stop	1
65	350c.c., 500c.c.	24–9569	Twist grip friction spring	1
66	350c.c., 500c.c.	24–9571	Twist grip friction spring screw locknut	1
67	350c.c., 500c.c.	24–9570	Twist grip friction spring screw	1
68	350c.c., 500c.c.	65–8504	Twist grip rotor and rotor sleeve complete	1
69	350c.c., 500c.c.	65–8503	Twist grip rubber grip	1

Plate 16

TOOLS and SUNDRIES

Gold Star 350c.c. 500c.c.

Plate Ref. Number.	Model.	Part No.	Description.	Number per set.
1	350c.c., 500c.c.	42–9080	Damper unit adjusting spanner (Scrambles excepted)	1
2	350c.c., 500c.c.	1–3051	Double ended spanner	1
3	350c.c., 500c.c.	28–4265	Grease gun	1
4	350c.c., 500c.c.	15–832	Box spanner	1
5	350c.c., 500c.c.	65–9243	Fork top nut and gland spanner	1
6	350c.c., 500c.c.	90–9070	Damper unit adjusting spanner (Scrambles only)	1
7	350c.c., 500c.c.	42–9031	Petrol tank fixing bolt spanner	1
8	350c.c., 500c.c.	65–9240	Valve grinding tool	1
9	350c.c., 500c.c.	65–9248	Sparking plug spanner (Clubmans and Road Racing)	1
10	350c.c., 500c.c.	66–9132	Sparking plug spanner complete (Clubmans and Road Racing)	1
11	350c.c., 500c.c.	65–9115	Box spanner (small)	1
12	350c.c., 500c.c.	42–9026	Inflator	1
13	350c.c., 500c.c.	65–9266	Box spanner	1
14	350c.c., 500c.c.	65–9247	Cylinder holding down bolt spanner (Clubmans only)	1
15	350c.c., 500c.c.	65–9246	Carburetter and tappet adjusting spanner	1
16	350c.c., 500c.c.	65–9130	Tappet feelers (set)	1
17	350c.c., 500c.c.	29–9253	Tommy bar	1
18	350c.c., 500c.c.	29–9254	Combination spanner	1
19	350c.c., 500c.c.	29–9255	Front hub cone spanner	1
20	350c.c., 500c.c.	65–9132	Tappet adjusting spanner	1
21	350c.c., 500c.c.	24–8957	Petrol tank fixing bolt tommy bar	1
22	350c.c., 500c.c.	65–9205	Toolbag only	1
23	350c.c., 500c.c.	29–9251	Magdyno spanner	1
24	350c.c., 500c.c.	29–9252	Tyre lever	1
25	350c.c., 500c.c.	65–9133	Tappet adjusting spanner	1

Plate 17

ELECTRICAL EQUIPMENT

Gold Star 350c.c. 500c.c.

Plate Ref. Number.	Model.	Part No.	Description.	Number per set.
1	350c.c., 500c.c.	65–9174	Speedometer and rev. counter mounting bracket (as required when rev. counter speedo is fitted)	1
2	350c.c., 500c.c.	19–1204	Magneto	1
3	350c.c., 500c.c.	42–9046	Horn	1
4	350c.c., 500c.c.	65–9179	Speedometer and rev. counter bracket bolt	2
5	350c.c., 500c.c.	27–8560	Speedometer and rev. counter mounting washer	2
6	350c.c., 500c.c.	15–7383	Speedometer and rev. counter mounting rubber	4
7	350c.c., 500c.c.	65–9111	Speedometer and rev. counter bracket	1
8	350c.c., 500c.c.	65–9167	Rev. counter fixing bracket complete (when rev. counter only is used, less lighting)	1
9	350c.c., 500c.c.	19–1472	Horn push (for use with two piece handlebar)	1
10	350c.c., 500c.c.	19–524	Headlamp with harness and dipper switch	1
11	350c.c., 500c.c.	42–9012	Voltage control toolbox buffer ring (rubber)	1
12	350c.c., 500c.c.	19–1515	Voltage control	1
13	350c.c., 500c.c.	42–9009	Voltage control cable grommet	1
14	350c.c., 500c.c.	2–1354	Voltage control securing bolt	2
15	350c.c., 500c.c.	25–7180	Voltage control securing bolt and toolbox washer	2
16	350c.c., 500c.c.	2–2395	Voltage control securing bolt nut	2
17	350c.c., 500c.c.	65–9160	Speedometer cable (when rev. counter and speedo is fitted)	1
17	350c.c., 500c.c.	67–9057	Speedometer cable	1
18	350c.c., 500c.c.	19–2106	Speedometer (120 m.p.h.) (Trials and Scrambles)	1
18	350c.c., 500c.c.	19–2107	Speedometer (120 m.p.h.) (Clubmans and Road Racing)	1
19	350c.c., 500c.c.	65–9166	Rev. counter head	1
20	350c.c., 500c.c.	19–1201	Magdyno	1
21	350c.c., 500c.c.	65–9172	Rev. counter cable	1
22	350c.c., 500c.c.	19–2012	Horn push	1
23	350c.c., 500c.c.	19–1000	Stop and tail lamp	1
24	350c.c., 500c.c.	29–9221	Licence holder	1
25	350c.c., 500c.c.	42–9027	Stop lamp switch operating link	1
26	350c.c., 500c.c.	65–9235	Stop lamp switch operating spring	1
27	350c.c., 500c.c.	2–47	Stop lamp switch screw nut	2
28	350c.c., 500c.c.	29–3319	Stop lamp switch screw washer (shakeproof)	2
29	350c.c., 500c.c.	19–1114	Stop lamp switch	1
30	350c.c., 500c.c.	2–1309	Stop lamp switch screw	2
31	350c.c., 500c.c.	65–9164	Rev. counter gearbox	1
32	350c.c., 500c.c.	19–704	Dipper switch (for use with two piece handlebar)	1
33	350c.c., 500c.c.	2–1462	Speedometer and rev. counter mounting screw washer (spring)	2
34	350c.c., 500c.c.	2–204	Speedometer and rev. counter mounting screw	2

Plate 16

TOOLS and SUNDRIES

350c.c. and 500c.c. Gold Star

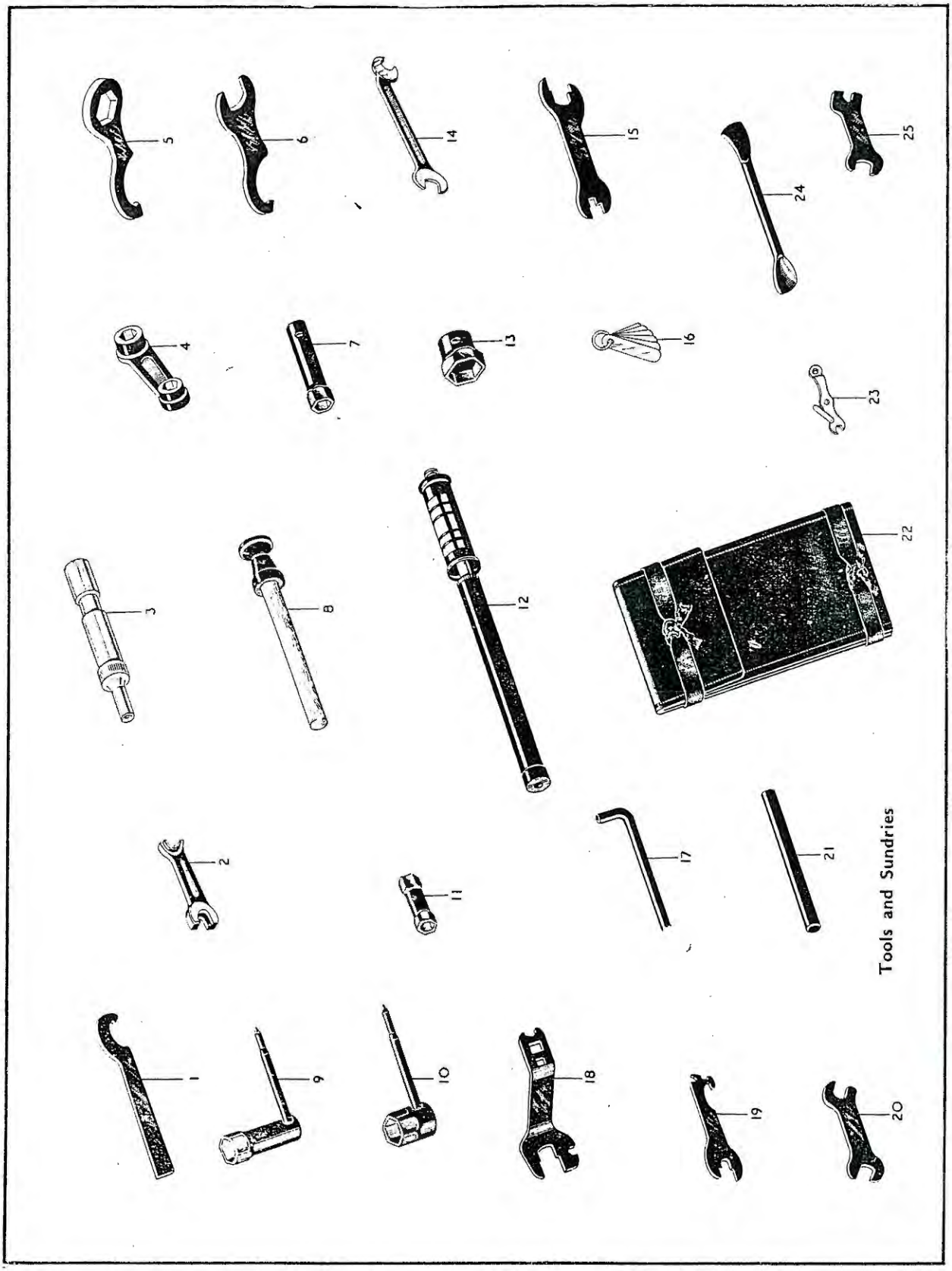

Plate 17

ELECTRICAL EQUIPMENT

350c.c. and 500c.c. Gold Star

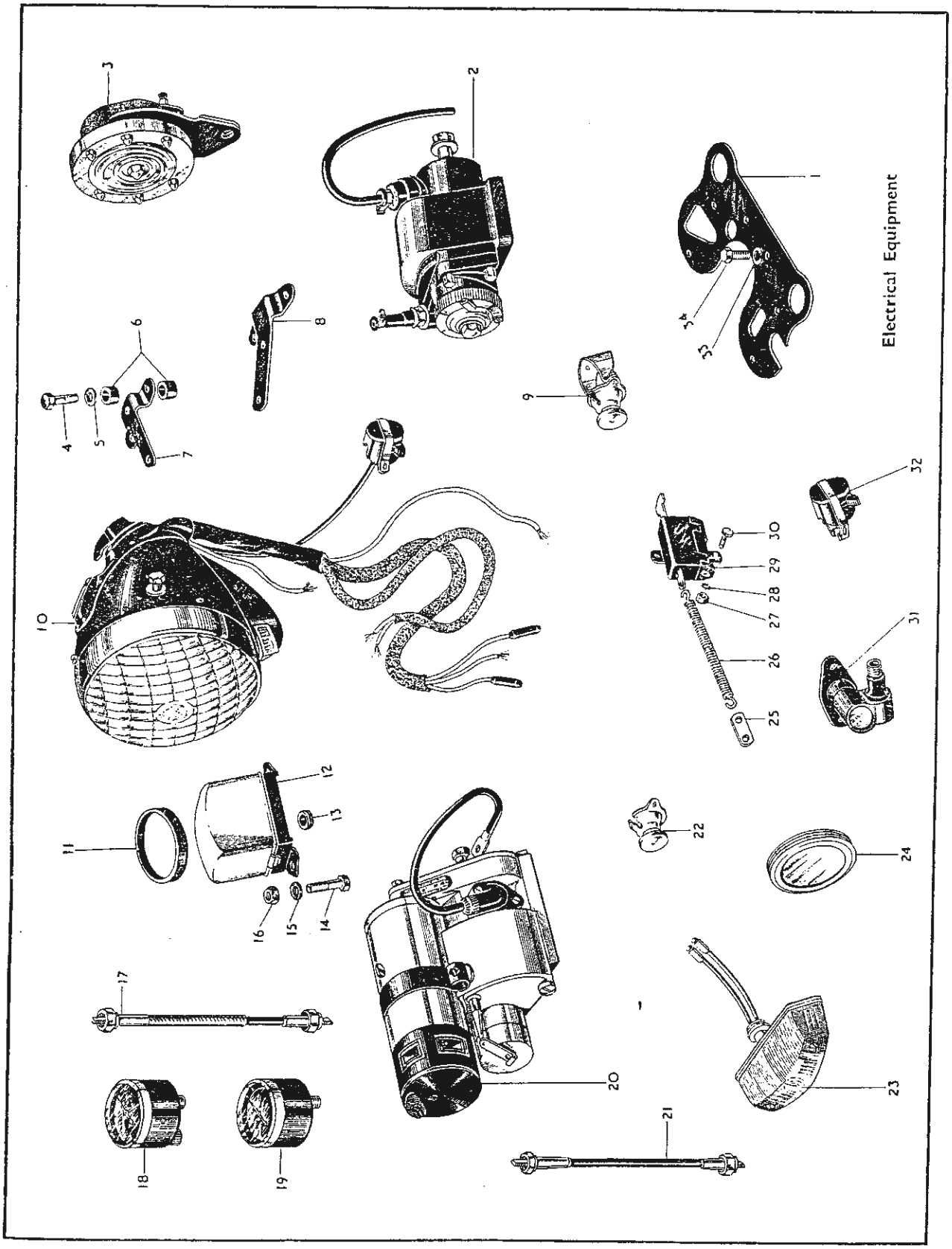

Numeric Index

PISTONS 1954

MODELS	Comp. Ratio	PISTONS COMPLETE			COMPRESSION RING (2 per set)			SCRAPER RING (1 per set)		
		Standard	½mm. O.S.	1mm. O.S.	Standard	½mm. O.S.	1mm. O.S.	Standard	½mm. O.S.	1mm. O.S
350c.c. Trials	6.5	65–1680	65–1682	65–1684	65–1621	65–1622	65–1623	65–490	65–491	65–492
350c.c. Road Trim, Trials, Scrambles	8.0	65–1615	65–1617	65–1619	65–1621	65–1622	65–1623	65–490	65–491	65–492
" " " "	8.5	65–1666	65–1668	65–1670	65–1621	65–1622	65–1623	65–490	65–491	65–492
" " " "	9.0	65–1673	65–1675	65–1667	65–1621	65–1622	65–1623	65–490	65–491	65–492
350c.c. Road Trim	12.25	65–1686	65–1688	65–1690	65–1621	65–1622	65–1623	65–490	65–491	65–492
350c.c. Clubmans and Road Racing	6.5	65–2275	65–2277	65–2279	65–1621	65–1622	65–1623	65–490	65–491	65–492
" " " "	8.0	65–2254	65–2256	65–2258	65–1621	65–1622	65–1623	65–490	65–491	65–492
" " " "	8.5	65–2281	65–2283	65–2285	65–1621	65–1622	65–1623	65–490	65–491	65–492
" " " "	9.0	65–2287	65–2289	65–2291	65–1621	65–1622	65–1623	65–490	65–491	65–492
500c.c. Trials	6.8	65–1464	65–1465	65–1466	65–1453	65–1454	65–1455	65–1253	65–1254	65–1255
500c.c. Road Trim, Trials, Scrambles	7.5	65–1467	65–1468	65–1469	65–1453	65–1454	65–1455	65–1253	65–1254	65–1255
" " " "	8.0	65–1290	65–1291	65–1292	65–1453	65–1454	65–1455	24–1792	24–1793	24–2794
" " " "	9.0	65–1537	65–1538	65–1539	65–1453	65–1454	65–1455	24–1792	24–1793	24–1794
" " " "	11.0	65–1278	65–1280	65–1282	65–1453(1) 65–1456(1)	65–1454(1) 65–1457(1)	65–1455(1) 65–1458(1)	24–1792	24–1793	24–1794
500c.c. Clubmans and Road Racing	8.0	65–2307	65–2309	65–2311	65–2266	65–2267	65–2268	65–2269 65–2272	65–2270 65–2273	65–2271 65–2274
" " " "	8.5	65–2260	65–2262	65–2264	65–2266	65–2267	65–2268	65–2269 65–2272	65–2270 65–2273	65–2271 65–2274
" " " "	9.0	65–2300	65–2302	65–2304	65–2266	65–2267	65–2268	65–2269 65–2272	65–2270 65–2273	65–2271 65–2274

CARBURETTERS

Messrs. AMALGAMATED CARBURETTERS LTD., PERRY BARR, BIRMINGHAM.

Model.	Type.	Choke Size (in.)	Main Jet.	Throttle Valve.	Needle Position.	Needle Jet.
Touring	Standard	1	150	6/4	3	.1065
350c.c.	10T.T.	1-3/32	360	7	3	.109
Trials 350c.c.	Standard	1	150	6/4	3	.1065
Scrambles 350c.c.	10T.T.	1-3/32	360	7	3	.109
Road Racing	10T.T.	1-3/32	360	7	3	.109
350c.c.	Remote Needle	1-3/32	450	6	4	.109
Clubmans 350c.c.	10T.T.	1-3/32	360	7	3	.109
Touring	Standard	1-1/8	200	29/4	3	.1065
500c.c.	10T.T.	1-5/32	360	7	3	.109
Trials 500c.c.	Standard	1-1/8	200	29/4	3	.1065
Scrambles 500c.c.	10T.T.	1-5/32	360	7	3	.109
Road Racing	10T.T.	1-5/32	360	7	3	.109
500c.c.	Remote Needle	1-3/16	520	7	4	.109
Clubmans 500c.c.	10T.T.	1-5/32	360	7	3	.109
350c.c. Clubmans and Road Racing	G.P.	1-3/32	210	6	3	.109
500c.c. Clubmans and Road Racing	G.P.	1-7/32	260	7	2	.109

GOLD STAR ENGINE FRAME MARKINGS 1954

Model.	Engine.	Frame.
350c.c.	BB32G.S.-1001 upwards	C.B.32-101 upwards
500c.c.	BB34G.S.-1001 upwards	CB32-101 upwards

British Only

MOTORCYLES AND PARTS INC.

32451 PARKLANE ST.
GARDEN CITY, MI 48135 USA

WWW.BRITISHONLY.COM
INFO@BRITISHONLY.COM

RETAIL: 1-800-278-6659 ***WHOLESALE: 1-800-852-9253*** ***FAX: 1-734-422-9253***

WORLDS LARGEST SELECTION OF FACTORY ORIGINAL NEW AND USED PARTS

45,000 SQ. FT. OF MOTORCYLE PARTS & ACCESSORIES FROM 1911 TO 1984 FOR ALL BRITISH MAKES!
CASH FOR ALL BRITISH BIKES, PARTS AND LITERATURE

SPECIALIZING IN
VINTAGE MOTORCYLCE PARTS

TRIUMPH
Norton
BSA

THE BIGGEST!

ENGINE REBUILDING PARTS
GASKET - SEALS - BEARINGS
BUSHINGS - PISTONS - RINGS
CLUTCHES - TUNE UP PARTS
SPEED EQUIPMENT

THE BEST!

STOCK AND CUSTOM PARTS
SEATS - HANDLEBARS - CHAINS
TIRES - TUBES - EXHAUST PIPES
MUFFLERS - GAS TANKS - FENDERS
RESTORATION PARTS

THE ONLY!

Central Wheel Components · Barnett Clutches & Cables · Classic Transfers Robert Derrick Ltd · Renold · Lucas · Amal · Emgo Your Powersport Supplier · Brituro England · JP Pistons · Hastings · UH

VELOCETTE • ANDOVER NORTON • TEC • HAYNES • P&P SEATING • WASSELL • MORGO
ALPHA BEARINGS • M.A.C. PRODUCTS • JOE HUNT MAGNETOS • J.J. CABLES • BUCHANAN'S
L.A. SLEEVE • MEGACYCLE CAMS • T.J. WASSELL LIMITED • SUDCO INTERNATIONAL
ACE CLASSICS LONDON • CLASSIC GASKETS • BRITISH WIRING • PBM ENGINEERING
TRI-COR ENGLAND • LEAK PROOF SEALS • MCA (ASTON) LIMITED • GARDNER - WESTCOTT

WE ACCEPT VISA - MASTERCARD - DISCOVER - AMERICAN EXPRESS

PARTS SHIPPED WORDLWIDE !!! VISA · MasterCard · Discover · American Express

VISIT OUR EBAY STORE
http://stores.ebay.com/British-Only-Motorcycles-And-Parts

British Only

MOTORCYCLES AND PARTS INC.
32451 PARKLANE ST
GARDEN CITY, MI 48135 USA
PHONE: **800-278-6659**
FAX: **734-422-9253**

Year:	Make:	Model:
Engine #		
Frame #		

WWW.BRITISHONLY.COM
INFO@BRITISHONLY.COM

Quantity	Part #	Description	Each	Amount

Date _____ / _____ / _____ **Customer #** _____ **Salesperson** _____

Card Number _____ **Expires** _____

Name _____

Address _____

City/State/Zip _____

Phone _____ / _____ **Fax** _____

Email _____

Signature _____

Subtotal	
Insurance	
Shipping	
Total	
Michigan Residents Add 6% Sales Tax	
Amount Enclosed	

FOLD

Name _____

Address _____

City _____

State _____ Zip _____

USE
FIRST CLASS
LETTER
POSTAGE

British Only

MOTORCYCLES AND PARTS INC.

32451 PARKLANE ST
GARDEN CITY, MI 48135 USA

FOLD

British Only

MOTORCYCLES AND PARTS INC.
32451 PARKLANE ST
GARDEN CITY, MI 48135 USA
PHONE: **800-278-6659**
FAX: **734-422-9253**

Year:	Make:	Model:
Engine #		
Frame #		

WWW.BRITISHONLY.COM
INFO@BRITISHONLY.COM

Quantity	Part #	Description	Each	Amount

Date _____ / _____ / _____ **Customer #** _____ **Salesperson** _____

Card Number _____ **Expires** _____

Name _____

Address _____

City/State/Zip _____

Phone _____ / _____ **Fax** _____

Email _____

Signature _____

Subtotal	
Insurance	
Shipping	
Total	
Michigan Residents Add 6% Sales Tax	
Amount Enclosed	

FOLD

Name _____

Address _____

City _____

State _____ Zip _____

USE
FIRST CLASS
LETTER
POSTAGE

British Only

MOTORCYCLES AND PARTS INC.

32451 PARKLANE ST
GARDEN CITY, MI 48135 USA

FOLD