20-10173C

CATALOGUE OF

GENUINE BSA SPARES

FOR

Model B25 Starfire

ISSUED BY

B.S.A. MOTOR CYCLES LTD.

Service Department, Armoury Road,

Birmingham 11

TELEPHONE . . . 021-772-2381

TELEGRAMS . . . "SELMOTO BIRMINGHAM"

B.S.A. MOTOR CYCLES LTD.

Registered Offices and Works: ARMOURY ROAD, BIRMINGHAM 11

Telephone: 021-772-2381 *Telegrams and Cables:* "SELMOTO BIRMINGHAM"

Contractors to Her Majesty's Government, the War Office, the Admiralty, the Post Office, the Colonial and Foreign Governments

Publication Reference 00-5709—October, 1969. **Printed in England by B.S.A. Press**

Please Note!

Replacement parts or accessories must be of B.S.A. origin or as approved by B.S.A. Motor Cycles Ltd.

In this respect your attention is drawn to the Terms and Conditions of B.S.A. Guarantee.

British Only

MOTORCYLES AND PARTS INC.

32451 PARKLANE ST.
GARDEN CITY, MI 48135 USA

WWW.BRITISHONLY.COM
INFO@BRITISHONLY.COM

RETAIL: 1-800-278-6659 ***WHOLESALE: 1-800-852-9253*** ***FAX: 1-734-422-9253***

WORLDS LARGEST SELECTION OF FACTORY ORIGINAL NEW AND USED PARTS

45,000 SQ. FT. OF MOTORCYLE PARTS & ACCESSORIES FROM 1911 TO 1984 FOR ALL BRITISH MAKES!
CASH FOR ALL BRITISH BIKES, PARTS AND LITERATURE

SPECIALIZING IN
VINTAGE MOTORCYLCE PARTS

TRIUMPH
Norton
BSA

THE BIGGEST!

ENGINE REBUILDING PARTS
GASKET - SEALS - BEARINGS
BUSHINGS - PISTONS - RINGS
CLUTCHES - TUNE UP PARTS
SPEED EQUIPMENT

THE BEST!

STOCK AND CUSTOM PARTS
SEATS - HANDLEBARS - CHAINS
TIRES - TUBES - EXHAUST PIPES
MUFFLERS - GAS TANKS - FENDERS
RESTORATION PARTS

THE ONLY!

Central Wheel Components · Barnett Clutches & Cables · Classic Transfers Robert Derrick Ltd · Renold · Lucas · Amal · Emgo Your Powersport Supplier · Brituro England · JP Pistons · Hastings · UH

VELOCETTE • ANDOVER NORTON • TEC • HAYNES • P&P SEATING • WASSELL • MORGO
ALPHA BEARINGS • M.A.C. PRODUCTS • JOE HUNT MAGNETOS • J.J. CABLES • BUCHANAN'S
L.A. SLEEVE • MEGACYCLE CAMS • T.J. WASSELL LIMITED • SUDCO INTERNATIONAL
ACE CLASSICS LONDON • CLASSIC GASKETS • BRITISH WIRING • PBM ENGINEERING
TRI-COR ENGLAND • LEAK PROOF SEALS • MCA (ASTON) LIMITED • GARDNER - WESTCOTT

WE ACCEPT VISA - MASTERCARD - DISCOVER - AMERICAN EXPRESS

PARTS SHIPPED WORDLWIDE !!! VISA · MasterCard · Discover · American Express

VISIT OUR EBAY STORE
http://stores.ebay.com/British-Only-Motorcycles-And-Parts

British Only

MOTORCYLES AND PARTS INC.

32451 PARKLANE ST.
GARDEN CITY, MI 48135 USA

WWW.BRITISHONLY.COM
INFO@BRITISHONLY.COM

RETAIL: 1-800-278-6659 ***WHOLESALE: 1-800-852-9253*** ***FAX: 1-734-422-9253***

WORLDS LARGEST SELECTION OF FACTORY ORIGINAL NEW AND USED PARTS

45,000 SQ. FT. OF MOTORCYLE PARTS & ACCESSORIES FROM 1911 TO 1984 FOR ALL BRITISH MAKES!
CASH FOR ALL BRITISH BIKES, PARTS AND LITERATURE

SPECIALIZING IN
VINTAGE MOTORCYLCE PARTS

TRIUMPH
Norton
BSA

THE BIGGEST!

ENGINE REBUILDING PARTS
GASKET - SEALS - BEARINGS
BUSHINGS - PISTONS - RINGS
CLUTCHES - TUNE UP PARTS
SPEED EQUIPMENT

THE BEST!

STOCK AND CUSTOM PARTS
SEATS - HANDLEBARS - CHAINS
TIRES - TUBES - EXHAUST PIPES
MUFFLERS - GAS TANKS - FENDERS
RESTORATION PARTS

THE ONLY!

Central Wheel Components · Barnett Clutches & Cables · Classic Transfers Robert Derrick Ltd · Renold · Lucas · Amal · Emgo Your Powersport Supplier · Brituro England · JP Pistons · Hastings · UH

VELOCETTE • ANDOVER NORTON • TEC • HAYNES • P&P SEATING • WASSELL • MORGO
ALPHA BEARINGS • M.A.C. PRODUCTS • JOE HUNT MAGNETOS • J.J. CABLES • BUCHANAN'S
L.A. SLEEVE • MEGACYCLE CAMS • T.J. WASSELL LIMITED • SUDCO INTERNATIONAL
ACE CLASSICS LONDON • CLASSIC GASKETS • BRITISH WIRING • PBM ENGINEERING
TRI-COR ENGLAND • LEAK PROOF SEALS • MCA (ASTON) LIMITED • GARDNER - WESTCOTT

WE ACCEPT VISA - MASTERCARD - DISCOVER - AMERICAN EXPRESS

PARTS SHIPPED WORDLWIDE !!! VISA · MasterCard · Discover · American Express

VISIT OUR EBAY STORE
http://stores.ebay.com/British-Only-Motorcycles-And-Parts

SUFFIX NUMBERS TO BE USED TO IDENTIFY VARYING FINISHES

When ordering components with varying finishes, please state finish required by adding the appropriate number to part number.

EXAMPLE: Front Mudguard, Chrome 90–6580/003.

PETROL TANK (U.S.A.) Flamboyant Aircraft Blue, White Stripes, Red Lining	/280
PETROL TANK (standard) Flamboyant Aircraft Blue	/227
SIDECOVERS (U.S.A.) White	/69
SIDECOVERS (standard) Black	/007

OTHER PARTS:

CHROME	/003
BLACK	/007
SILVER	/165

PRICES:

No price codes are quoted in this list. For prices please refer to the Master Price List No. 00–5125.

Wherever possible details of thread form and size are quoted after description of nuts, bolts, screws, studs and washers. Such as: 14–7006 Socket screw ($\frac{1}{4}''$ UN.C. × 1″) = $\frac{1}{4}''$ diameter unified coarse thread 1″ long under head.

Vital components, which are manufactured from special material, are indicated by a sign and the British Standard symbol for the material is quoted at the foot of the page.

ABBREVIATIONS:

B.A.	=	British Association screw threads.
B.S.C.	=	British Standard Cycle screw threads.
B.S.F.	=	British Standard Fine screw threads.
W.F.	=	Whitworth Form screw threads.
UN.F	=	Unified Fine screw threads.
UN.C.	=	Unified Coarse screw threads.

CARBURETTERS

AMAL LIMITED, HOLDFORD ROAD, WITTON, BIRMINGHAM 6.

CHAINS

RENOLDS LIMITED, WYTHENSHAWE, MANCHESTER.

ELECTRICAL EQUIPMENT

J. LUCAS LIMITED, GREAT HAMPTON STREET, BIRMINGHAM 18.

SPEEDOMETERS

SMITH'S MOTOR ACCESSORIES LIMITED, CRICKLEWOOD WORKS, LONDON N.W.2.

TYRES

DUNLOP COMPANY LIMITED, FORT DUNLOP, BIRMINGHAM 24.

SPARKING PLUGS

CHAMPION SPARKING PLUG COMPANY LIMITED, FELTHAM, MIDDLESEX.

SHOCK ABSORBERS

GIRLING LIMITED, BIRMINGHAM ROAD, WEST BROMWICH.

ASSEMBLIES COMPLETE

Spares No.	*Description*
00–3168	TOP OVERHAUL OR DECOKE GASKET SET.
00–3310	FULL OVERHAUL GASKET SET.
00–4403	CAPACITOR KIT.
00–5195	TACHOMETER KIT.
71–1087	ENGINE/GEARBOX UNIT LESS CARBURETTER AND EXHAUST SYSTEM.
71–1119	CRANKCASE COMPLETE WITH FIXED FITTINGS.
71–1133	OIL PUMP COMPLETE.
70–9848	CRANKSHAFT AND FLYWHEEL ASSEMBLY.
57–4016	CLUTCH COMPLETE.
82–9213	FRAME COMPLETE.
83–1607	FRAME COMPLETE (U.S.A.).
97–3895	FRONT FORK COMPLETE.
37–3463	FRONT WHEEL WITH SPINDLE AND BEARINGS.
37–3466	FRONT HUB WITH SPINDLE AND BEARINGS.
40–6078	REAR WHEEL WITH SPINDLE AND BEARINGS.
41–6022	REAR HUB WITH SPINDLE AND BEARINGS.

PISTON CHART

PISTON COMPLETE			
Compression Ratio	Standard	+ ½ mm.	+ 1 mm.
10 to 1	40–0970	40–0972	40–0974
	COMPRESSION RINGS		
	Top (plain) 70–8276	Top (plain) 70–8277	Top (plain) 70–8278
	Centre (taper) 70–6838	Centre (taper) 70–9017	Centre (taper) 70–9018
	SCRAPER RINGS		
	70–6839	70–9021	70–9022

CARBURETTER

Spares Number	Makers Number	Main Jet	Pilot Jet	Throttle Slide	Needle Jet	Needle Position
19–2419	R.928/4	170	622/107	3	·106	1

INDEX

		Page
	ASSEMBLIES COMPLETE	5
Plate 1	CYLINDER AND CRANKSHAFT	8 - 11
Plate 2	CRANKCASE	12 - 15
Plate 3	GEAR CLUSTER	16 - 19
Plate 4	CLUTCH	20 - 21
Plate 5	FRAME	22 - 25
Plate 6	SWINGING ARM	26 - 27
Plate 7	OIL TANK, SIDECOVERS, SILENCER	28 - 29
Plate 8	FOOTRESTS AND BRAKE LINKAGE	30 - 31
Plate 9	FRONT FORK	32 - 35
Plate 10	FRONT WHEEL	36 - 37
Plate 11	REAR WHEEL	38 - 39
Plate 12	MUDGUARDS	40 - 43
Plate 13	PETROL TANK, TWINSEAT AND CONTROLS	44 - 47
Plate 14	ELECTRICAL EQUIPMENT	48 - 51
Plate 15	TOOLS	52 - 53
Plate 16	CARBURETTER	54 - 55

Plate 1

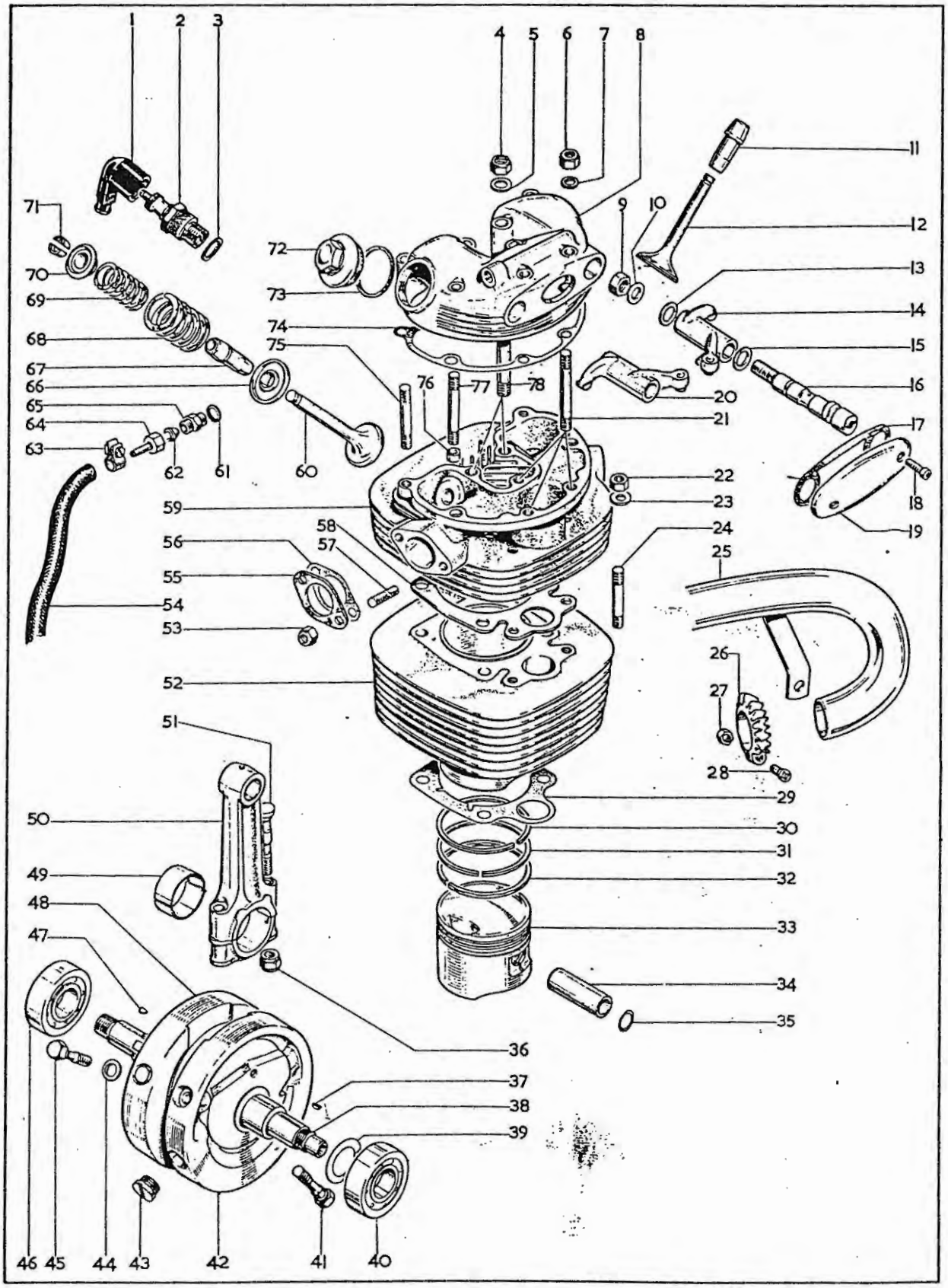
1
2
3
4
5
6
7
8
9
10
11
12
13
14
15
16
17
18
19
20
21
22
23
24
25
26
27
28
29
30
31
32
33
34
35
36
37
38
39
40
41
42
43
44
45
46
47
48
49
50
51
52
53
54
55
56
57
58
59
60
61
62
63
64
65
66
67
68
69
70
71
72
73
74
75
76
77
78

Plate 1

CYLINDER AND CRANKSHAFT

Plate Ref.	*Spares Number*	*Description*	*Per Set*
1.	19–7625	Spark plug cover	
2.	19–7606	Spark plug (Champion N3)	
3.	66–0102	Washer, spark plug	
4.	24–6040	Nut, rocker box to head ($\frac{5}{16}$" B.S.C.)	2
5.	02–0923	Washer, rocker box to head ($\frac{5}{16}$" × $\frac{5}{8}$" × $\frac{1}{16}$")	2
6.	40–0209	Nut, rocker box to head ($\frac{1}{4}$" B.S.C.)	7
7.	02–0525	Washer, rocker box to head ($\frac{1}{4}$" × $\frac{1}{2}$" × ·048")	7
8.	70–7911	Rocker box	
9.	14–0403	Nut, rocker spindle ($\frac{3}{8}$" U.N.F.)	2
10.	02–2138	Washer, rocker spindle nut ($\frac{3}{8}$" × $\frac{3}{4}$" × $\frac{1}{16}$")	2
11.	40–0932	Exhaust valve guide	
12.	70–7777	Exhaust valve	
13.	40–0157	Thrust washer, rocker spindle ($\frac{3}{8}$" I/D)	2
14.	70–7791	Exhaust rocker	
15.	40–0158	Thrust washer, rocker spindle ($\frac{1}{2}$" I/D)	2
16.	70–7787	Rocker spindle	2
17.	40–0967	Gasket, inspection cover	
18.	40–0965	Screw, inspection cover ($\frac{3}{16}$" B.S.C. × $\frac{11}{16}$")	2
19.	40–0966	Inspection cover, rocker box	
20.	70–7790	Inlet rocker	
21.	70–7996	Stud, cylinder head	3
22.	24–5160	Nut, cylinder head ($\frac{5}{16}$" B.S.C.)	2
23.	76–0012	Washer, cylinder head nut (($\frac{21}{64}$" × $\frac{9}{16}$" × $\frac{3}{32}$")	2
24.	40–0020	Stud, cylinder head ($\frac{5}{16}$" B.S.C./B.S.F.)	2
25.	71–1178	Exhaust pipe (U.S.A. models)	
25.	70–9724	Exhaust pipe (standard)	
26.	40–2710**	Exhaust pipe collar	
27.	40–2712**	Nut, exhaust pipe collar (2 B.A.)	
28.	40–2711**	Screw, exhaust pipe collar (2 B.A. × $\frac{13}{16}$")	
29.	70–7728	Cylinder base gasket	
30.	70–8276†	Piston ring (top)	
31.	70–6838†	Piston ring (centre, taper)	
32.	70–6839†	Piston ring (scraper)	
33.	40–0970†	Piston complete	
34.	40–0978	Gudgeon pin	
35.	40–0979	Circlip, gudgeon pin	2
36.	40–0915	Nut, connecting rod bolt ($\frac{5}{16}$" B.S.C.)	2
37.	41–0560	Key, crankshaft pinion	
38.	70–9848	Crankshaft and flywheel assembly	
39.	40–0064	Shim, crankshaft (·003") ·0762 mm.	*as reqd.*
39.	40–0065	Shim, crankshaft (·005") ·127 mm.	*as reqd.*
39.	40–0066	Shim, crankshaft (·010") ·254 mm.	*as reqd.*
39.	40–0069	Shim, crankshaft (·015") ·381 mm.	*as reqd.*
40.	24–0732	Bearing, crankshaft gear-side (Hoffman) 325	
41.	40–1031*	Bolt, flywheel ($\frac{3}{8}$" U.N.F. × 2")	4

Plate 1—*continued*

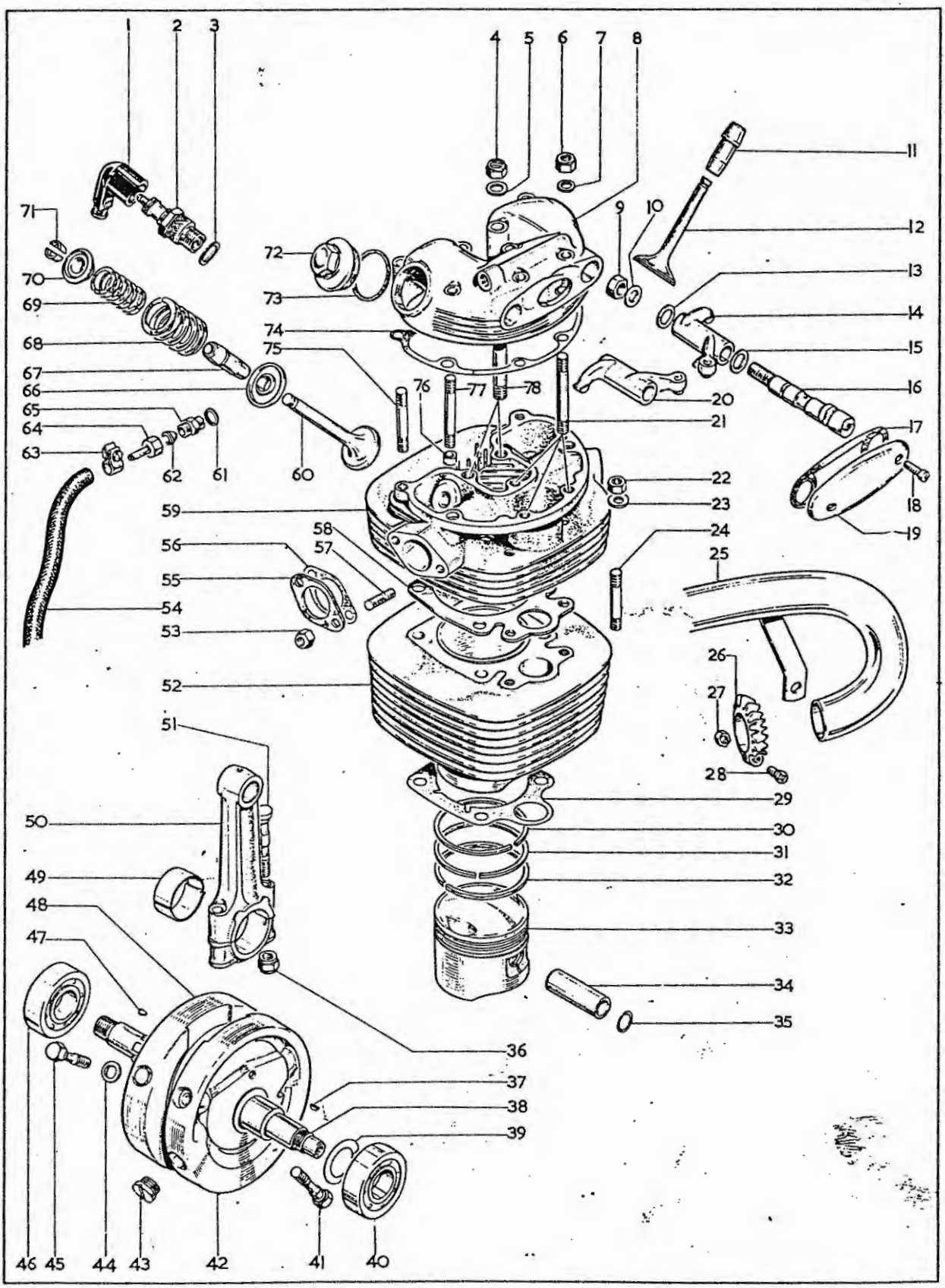

CYLINDER AND CRANKSHAFT

Plate Ref.	*Spares Number*	*Description*	*Per Set*
42.	70–9907	Flywheel, gear-side	
43.	40–0892	Screwed plug, gear-side flywheel	
44.	71–1003	Washer, flywheel bolt	8
45.	40–1030*	Bolt, flywheel ($\frac{3}{8}$" U.N.F. × $1\frac{1}{8}$")	4
46.	24–0724	Bearing, crankshaft drive-side (Hoffman R325L)	
47.	41–0673	Key, alternator rotor	
48.	70–9906	Flywheel, drive-side	
49.	40–0907	Big-end shell (standard)	2
49.	40–0917	Big-end shell (—·010")	2
49.	40–0918	Big-end shell (—·020")	2
49.	40–0919	Big-end shell (—·030")	2
50.	70–8836	Connecting rod complete	
51.	40–0913*	Bolt, connecting rod ($\frac{5}{16}$" B.S.A. × $2\frac{21}{64}$")	2
52.	70–9263	Cylinder barrel complete	
53.	42–4476	Nut, carburetter stud ($\frac{5}{16}$" B.S.C.)	2
54.	40–1037	Flexible oil pipe, to rocker box	
55.	70–7820	"Tufnol" spacer, carburetter flange	
56.	65–1232	Paper gasket, carburetter flange	
57.	68–0018*	Stud, carburetter mounting ($\frac{5}{16}$" B.S.C./B.S.F. × $1\frac{3}{8}$")	2
58.	40–0933	Cylinder head gasket	
59.	40–0929	Cylinder head with fixed fittings	
60.	68–0661	Inlet valve	
61.	76–0378	Fibre washer, oil pipe union	
62.	40–0993	Oil pipe, feed to rocker box	
63.	62–0263	Clip, flexible oil pipe	
64.	29–2089	Nut, oil pipe union	
65.	76–0308	Oil pipe union, rocker box	
66.	40–1018	Bottom cup, valve spring	2
67.	40–0931	Inlet valve guide	
68.	40–1009	Outer valve spring	2
69.	40–1007	Inner valve spring	2
70.	71–1165	Top collar, valve spring	2
71.	71–1166	Split collet, valve spring	4
72.	40–0968	Inspection cap, rocker box	2
73.	40–0969	Fibre washer, inspection cap	2
74.	70–7858	Gasket, rocker box	
75.	40–0939*	Stud, cylinder head ($\frac{1}{4}$" B.S.C./B.S.F. × $2\frac{7}{16}$")	2
76.	66–3074	Dowel, cylinder head	2
77.	40–0942*	Stud, cylinder head, dowel position ($\frac{1}{4}$" B.S.C./B.S.F. × $2\frac{11}{16}$")	2
78.	40–0127	Stud, rocker box	2

*Special material: **41.**—EN24. **45.**—EN24. **51.**—BS.3111. **57.**—EN15. **75.**—EN14B. **77.**—EN14B.

**Except U.S.A. models

†See page 6.

Plate 2

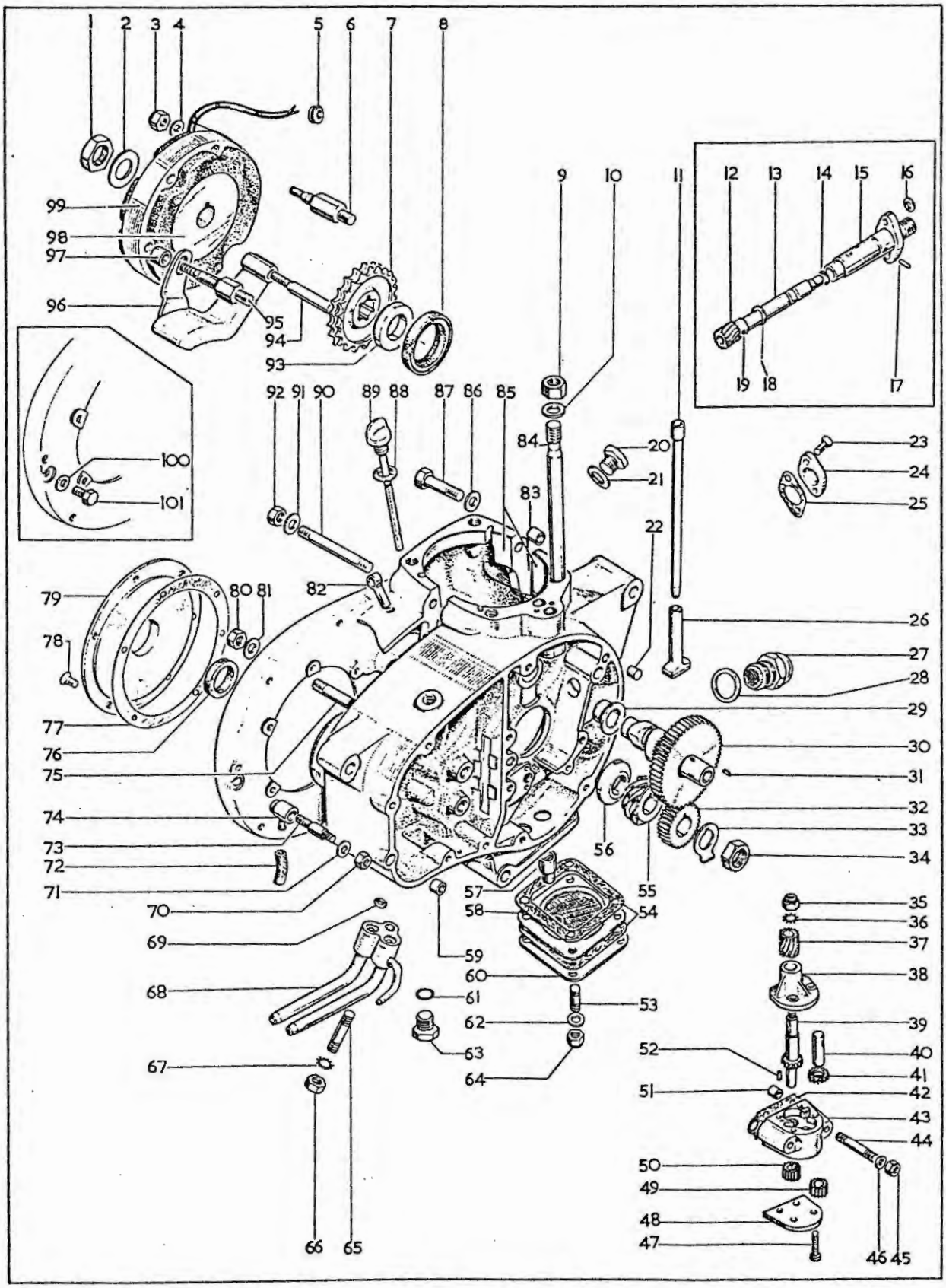
1
2
3
4
5
6
7
8
9
10
11
12
13
14
15
16
17
18
19
20
21
22
23
24
25
26
27
28
29
30
31
32
33
34
35
36
37
38
39
40
41
42
43
44
45
46
47
48
49
50
51
52
53
54
55
56
57
58
59
60
61
62
63
64
65
66
67
68
69
70
71
72
73
74
75
76
77
78
79
80
81
82
83
84
85
86
87
88
89
90
91
92
93
94
95
96
97
98
99
100
101

Plate 2

CRANKCASE

Plate Ref.	*Spares Number*	*Description*	*Per Set*
1.	29–2053	Rotor mounting nut	
2.	29–2054	Rotor mounting washer	
3.	14–1901	Stator mounting nut ($\frac{1}{4}$" UN.F.)	3
4.	02–0525	Stator mounting washer ($\frac{1}{4}$" × $\frac{1}{2}$" × ·048")	3
5.	40–0705	Grommet, alternator leads	
6.	21–1895*	Front stud, stator mounting ($\frac{1}{4}$" UN.F. × $\frac{5}{16}$" UN.C. × $2\frac{13}{32}$")	
7.	40–0210	Engine sprocket (23T)	
8.	40–0025	Oil seal, crankcase drive-side	
9.	14–0303	Nut, cylinder to crankcase ($\frac{3}{8}$" UN.F.)	4
10.	02–0130	Washer, cylinder to crankcase ($\frac{3}{8}$" × $\frac{11}{16}$" × ·080")	4
11.	40–1010	Inlet push rod	
11.	40–1021	Exhaust push rod	
12.	70–9428	Tachometer drive assembly complete	
12.	70–9382	Tachometer drive gear	
13.	70–9381	Tachometer drive shaft	
14.	70–9430	Drive shaft "O"-ring	
15.	70–9517	Tachometer drive body	
16.	24–0036	Tachometer cable seal washer	
17.	70–9431	Drive shaft locating pin	
18.	70–9383	Tachometer drive thrust washer	
19.	70–9429	Drive gear retaining pin	
20.	21–1872	Timing hole plug ($\frac{1}{2}$" × 13 UN.C. × $\frac{1}{2}$")	
21.	70–8896	Washer, timing hole plug	
22.	40–0394	Dowel, inner timing cover to crankcase	2
23.	40–0242*	Screw, tachometer drive and cover (2 B.A. × $\frac{27}{64}$")	2
24.	70–9384	Sealing plate	
25.	70–9432	Joint washer	
26.	70–7739	Tappet, inlet and exhaust	2
27.	71–1155	Pressure release valve assembly	
28.	70–9737	Washer, pressure release valve	
29.	70–8315	Camshaft bush	
30.	71–1276	Camshaft complete	

Plate 2—*continued*

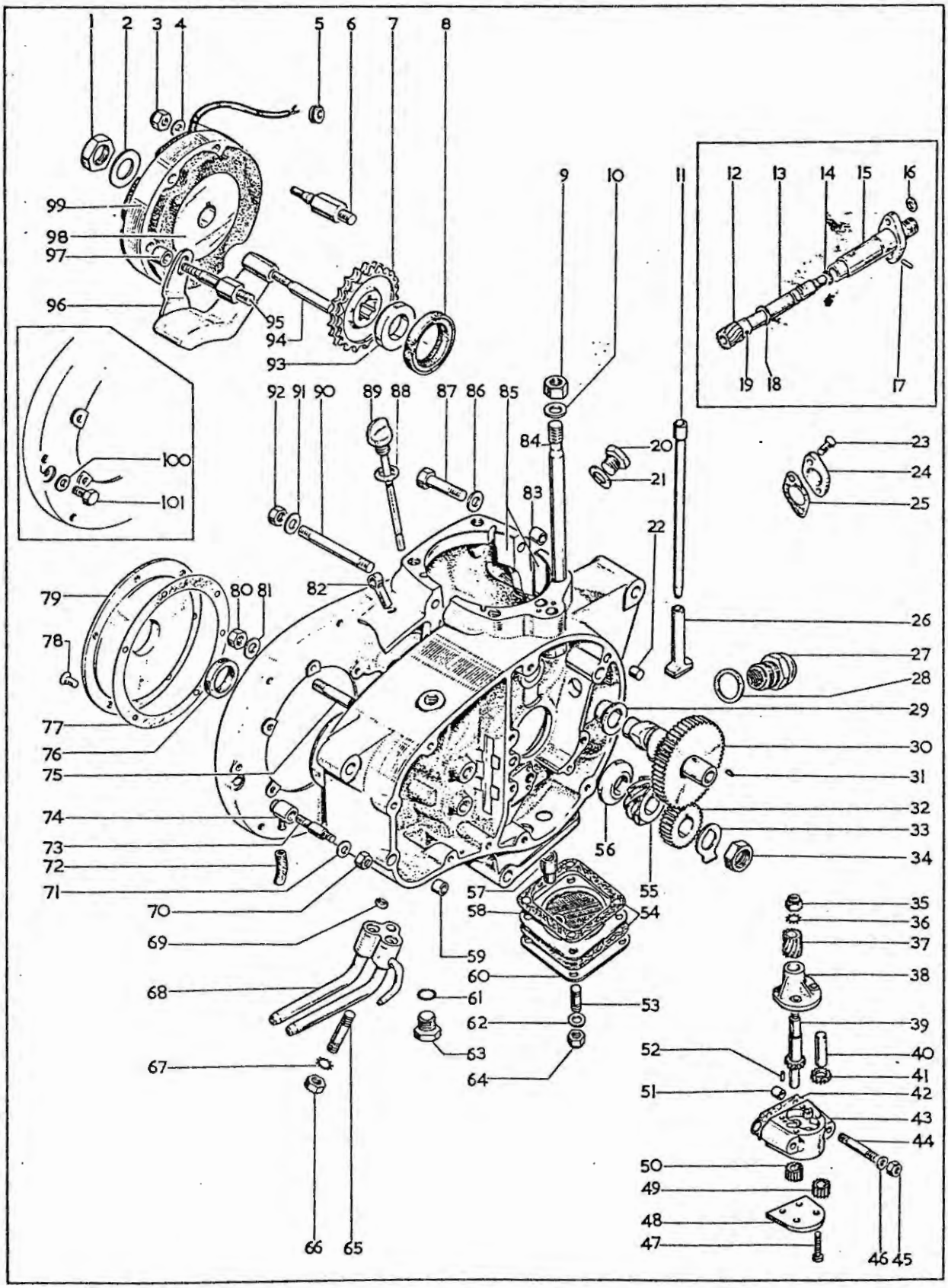

CRANKCASE

Plate Ref.	*Spares Number*	*Description*	*Per Set*
31.	40–0118	Camshaft pinion key	
32.	41–0569	Crankshaft pinion	
33.	40–0455	Lockwasher, crankshaft nut	
34.	37–1798	Nut, crankshaft pinion ($\frac{5}{8}$" B.S.C.)	
35.	40–0414	Nut, oil pump spindle ($\frac{1}{4}$" B.S.C.)	
36.	29–0541	Lockwasher, spindle nut	
37.	41–0603	Oil pump spindle gear	
38.	71–1139	Oil pump spindle housing	
39.	71–1142	Oil pump driving spindle	
40.	71–1147	Oil pump driven spindle	
41.	40–1016	Oil pump driven feed gear	
42.	41–0804	Gasket, oil pump to crankcase	
43.	71–1136	Oil pump body	
44.	21–1893*	Stud, oil pump to crankcase ($\frac{1}{4}$" UN.F./UN.C. × $2\frac{3}{16}$")	2
45.	14–1901	Nut, oil pump to crankcase ($\frac{1}{4}$" UN.F.)	2
46.	68–0938	Washer, oil pump stud nut ($\frac{17}{64}$" × $\frac{5}{8}$" × $\frac{1}{16}$")	2
47.	41–0609	Screw, oil pump bottom plate ($\frac{3}{16}$" B.S.C. × $1\frac{5}{16}$")	4
48.	67–1391	Oil pump bottom plate	
49.	41–0605	Oil pump driven scavenge gear	
50.	71–1143	Oil pump driving scavenge gear	
51.	41–0706	Dowel, oil pump to crankcase	2
52.	71–1148	Dowel, oil pump body to housing	2
53.	14–1401	Stud, crankcase sump cover ($\frac{1}{4}$" UN.F./UN.C. × 1")	4
54.	67–1288	Gasket, crankcase sump cover	2
55.	41–0567	Crankshaft oil pump drive worm gear	
56.	41–0565	Oil pump drive distance washer	
57.	41–0624	Crankcase scavenge valve	
58.	70–9979	Crankcase filter assembly	
59.	66–3074	Dowel, inner timing cover to crankcase	2
60.	67–1286	Crankcase sump cover	
61.	68–3168	"O"-ring, gearbox drain plug	
62.	02–0525	Washer, sump cover stud ($\frac{1}{4}$" × $\frac{1}{2}$" × ·048")	4

Plate 2—*continued*

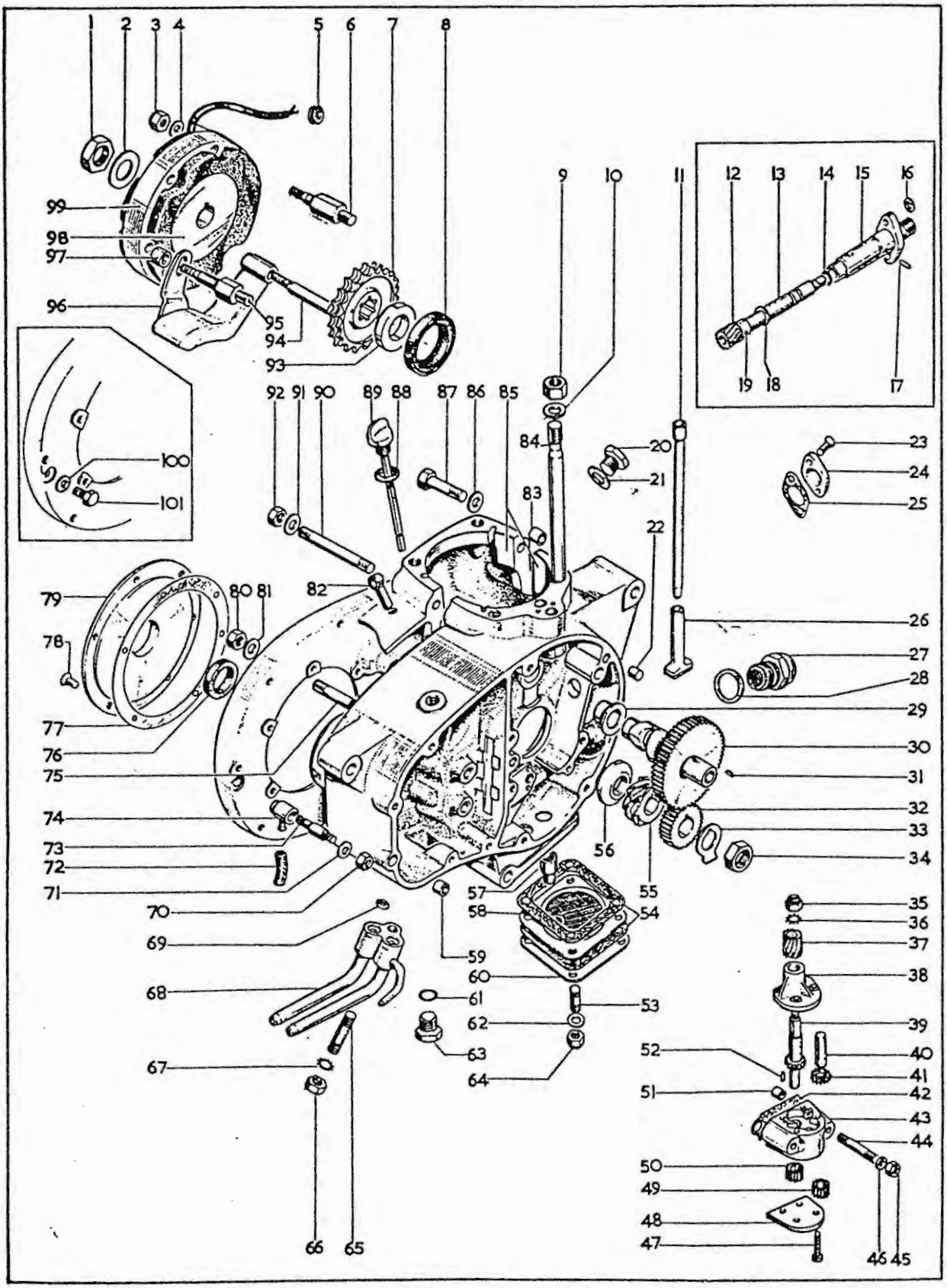

CRANKCASE

Plate Ref.	*Spares Number*	*Description*	*Per Set*
63.	21–1857	Gearbox drain plug	
64.	14–1901	Nut, crankcase sump cover ($\frac{1}{4}$" UN.F.)	4
65.	21–1891	Stud, crankcase oil pipe union ($\frac{5}{16}$" UN.F./UN.C. × $1\frac{7}{8}$")	
66.	14–0302	Nut, crankcase union stud ($\frac{5}{16}$" UN.F.)	
67.	36–0382	Lockwasher for nut line 66 ($\frac{5}{16}$")	
68.	40–1035	Crankcase oil pipe union	
69.	70–8259	"O"-ring, crankcase oil pipe union	
70.	14–1901**	Nut, chain oiler stud ($\frac{1}{4}$" UN.F.)	
71.	02–0525**	Washer, rear chain oiler ($\frac{1}{4}$" × $\frac{17}{32}$" × $\frac{5}{64}$")	
72.	40–0375**	Oil pipe, rear chain oiler	
73.	21–1985**	Stud, rear chain oiler ($\frac{1}{4}$" UN.C./UN.F. × $1\frac{5}{8}$")	
74.	68–0383**	Rear chain oiler	
75.	21–1890	Stud, crankcase rear ($\frac{5}{16}$" UN.C./UN.F. × $2\frac{11}{16}$")	2
76.	40–0243	Oil seal, primary chaincase	
77.	40–0241	Gasket, primary chaincase back	
78.	40–0246	Screw, primary chaincase back (2 B.A. × $\frac{5}{16}$")	6
79.	70–3789	Cover plate, primary chaincase back	
80.	14–0302	Nut, crankcase stud ($\frac{5}{16}$" UN.F.)	2
81.	02–0923	Washer, crankcase stud nut ($\frac{5}{16}$" × $\frac{5}{8}$" × $\frac{1}{16}$")	2
82.	40–9190	Clip, alternator leads	
83.	67–1236	Crankcase dowel	
84.	40–0865*	Cylinder barrel stud ($\frac{3}{8}$" UN.F. — $\frac{7}{16}$" UN.C. × $5\frac{1}{2}$")	4
85.	71–1119	Crankcase complete	
86.	02–0923	Washer, crankcase bolt ($\frac{5}{16}$" × $\frac{5}{8}$" × $\frac{1}{16}$")	3
87.	21–1892	Bolt, crankcase ($\frac{5}{16}$" UN.C. × $1\frac{1}{2}$")	3
88.	57–0948	Washer, gearbox dipstick	
89.	40–1033	Gearbox dipstick	
90.	21–1889	Stud, crankcase top ($\frac{5}{16}$" UN.F./UN.C. × $2\frac{11}{16}$")	2
91.	02–0923	Washer, crankcase stud ($\frac{5}{16}$" × $\frac{5}{8}$" × $\frac{1}{16}$")	2
92.	14–0302	Nut, crankcase stud ($\frac{5}{16}$" UN.F.)	2
93.	40–0325	Spacer ·324"/·327" (8·229/8·305 mm.)	*as reqd.*
93.	40–0326	Spacer ·309"/·312" (7·848/7·924 mm.)	*as reqd.*
93.	40–0327	Spacer ·294"/·297" (7·467/7·543 mm.)	*as reqd.*
94.	21–1896*	Bottom stud, stator mounting ($\frac{1}{4}$" UN.F. $\frac{5}{16}$" UN.C. × $2\frac{9}{16}$")	
95.	21–1894*	Rear stud, stator mounting ($\frac{1}{4}$" UN.F. $\frac{5}{16}$" UN.C. × $2\frac{19}{32}$")	
96.	41–0143	Primary chain tensioner	
97.	41–0146	Tensioner distance piece	
98.	19–8019	Alternator rotor (Lucas 54213901)	
99.	19–1262	Alternator stator (Lucas 47205)	
100	66–7518	Fibre washer, primary case back (U.S.A.)	
101.	14–6102	Bolt, primary case back (U.S.A.)	

*Special material: 6.—EN14B. 23.—EN8R. 44.—EN14B. 84.—EN15. 94.—EN8. 95.—EN14B.

**U.S.A. models excepted.

Plate 3

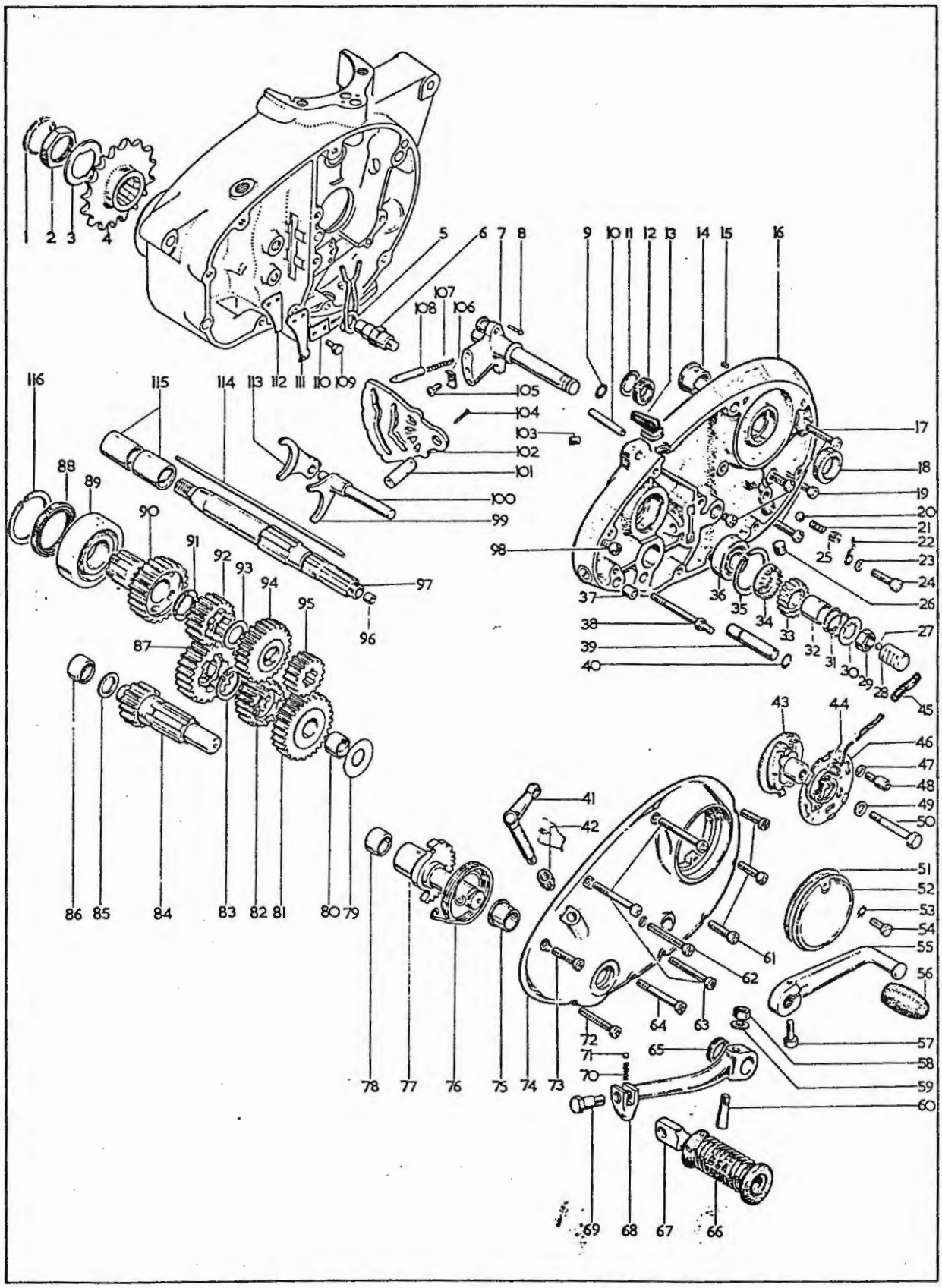
1
2
3
4
5
6
7
8
9
10
11
12
13
14
15
16
17
18
19
20
21
22
23
24
25
26
27
28
29
30
31
32
33
34
35
36
37
38
39
40
41
42
43
44
45
46
47
48
49
50
51
52
53
54
55
56
57
58
59
60
61
62
63
64
65
66
67
68
69
70
71
72
73
74
75
76
77
78
79
80
81
82
83
84
85
86
87
88
89
90
91
92
93
94
95
96
97
98
99
100
101
102
103
104
105
106
107
108
109
110
111
112
113
114
115
116

Plate 3

GEAR CLUSTER

Plate Ref.	*Spares Number*	*Description*	*Per Set*
1.	90–6074	Felt washer, final drive sprocket	
2.	40–3051*	Nut, final drive sprocket ($1\frac{3}{16}$" W.F.)	
3.	40–3121	Lockwasher, final drive sprocket	
4.	41–3095	Final drive sprocket (16 teeth)	
5.	40–3061	Gearchange return spring	
6.	57–3763	Anchor bolt, gearchange return spring	
7.	40–3321	Gearchange quadrant	
8.	40–3059	Rivet, quadrant plunger	2
9.	68–0289	"O"-ring, oil feed	
10.	75–0257	Breather pipe, inner timing cover	
11.	40–0862	Circlip, crankshaft oil seal	
12.	40–0977	Oil seal, crankshaft	
13.	41–0715	Grommet, contact breaker leads	
14.	40–0222	Camshaft bush	
15.	40–0028	Peg, camshaft bush	
16.	71–1059	Inner timing cover	
17.	14–6610	Screw, inner cover to crankcase ($\frac{1}{4}$" UN.C. × $1\frac{1}{2}$")	3
18.	40–0679	Camshaft oil seal	
19.	14–6606	Screw, front, inner cover to crankcase ($\frac{1}{4}$" UN.C. × $\frac{3}{4}$")	2
20.	97–2704	Ball, non-return valve ($\frac{1}{4}$" diameter)	
21.	40–0381	Spring, non-return valve	
22.	90–5268	Clip, contact breaker leads	
23.	02–0525	Washer, contact breaker leads ($\frac{1}{4}$" × $\frac{1}{2}$" × ·048")	
24.	14–6610	Screw, inner cover to crankcase ($\frac{1}{4}$" UN.C. × $1\frac{1}{2}$")	
25.	21–1898	Screwed plug, non-return valve ($\frac{3}{8}$" UN.C.)	
26.	70–9526	Sealing plug	
27.	65–2593	Ball, clutch thrust ($\frac{7}{32}$" diameter)	
28.	40–3282	Rack, clutch operating	
29.	76–0271*	Mainshaft nut ($\frac{1}{2}$" B.S.C.)	
30.	40–3257	Lockwasher, mainshaft	
31.	40–3273	Spring, kickstart ratchet	
32.	40–3272	Bush, kickstart ratchet pinion	
33.	40–3271	Pinion, kickstart ratchet	
34.	40–3279	Ratchet, kickstart	
35.	76–0528	Circlip, mainshaft bearing	
36.	90–0011	Mainshaft bearing (Hoffman LS.7)	
37.	66–3074	Dowel, outer timing cover	2
38.	57–3764	Anchor bolt, kickstart return spring	
39.	40–3276	Stop, kickstart quadrant	

Plate 3—*continued*

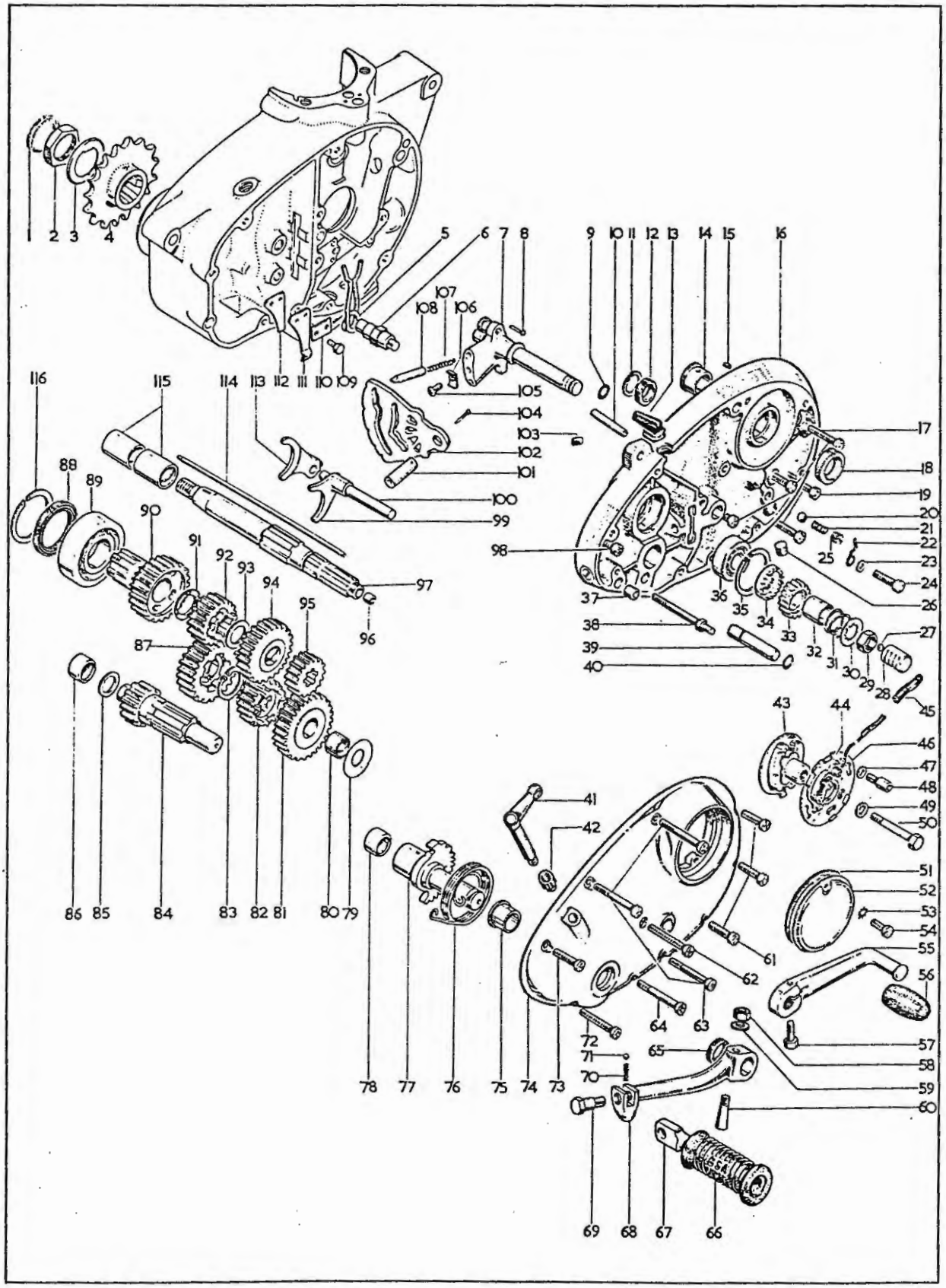

Plate 3—*continued*

GEAR CLUSTER

Plate Ref.	*Spares Number*	*Description*	*Per Set*
40.	40–3277	Circlip, kickstart stop	
41.	57–2750	Clutch operating lever	
42.	40–3283	Clutch operating pinion	
43.	19–1853	Auto-advance unit (Lucas 54419653)	
44.	19–1849	Contact set (Lucas 54419827)	
45.	40–0723	Sleeve, contact breaker leads	
46.	19–1852	Contact breaker plate (Lucas 54419645)	
47.	40–0682	Washer, contact breaker	2
48.	40–0683	Pillar bolt, contact breaker	2
49.	68–0331	Washer, auto-advance unit	
50.	14–0208	Bolt, auto-advance unit (¼″ U.N.F. × 2¼″)	
51.	70–7882	Gasket, contact breaker cover	
52.	70–8737	Contact breaker cover	
53.	29–3319	Lockwasher, cover screw line 54	2
54.	70–7354	Screw, contact breaker cover (2 B.A. × ½″)	2
55.	40–3073	Gearchange lever	
56.	89–3208	Rubber, gearchange lever	
57.	42–6554	Bolt, gearchange lever (¼″ B.S.C. × ¾″)	
58.	02–2578	Nut, Kickstart crank cotter (·266″ B.S.C.)	
59.	02–2580	Washer, kickstart crank cotter	
60.	02–2579	Cotter, kickstart crank (·266″ B.S.C.)	
61.	40–0236	Screw, outer timing cover (2 B.A. × ⅝″)	3
62.	14–6611	Screw, outer timing cover (¼″ UN.C. × 1¾″)	
63.	14–6612	Screw, outer timing cover (¼″ UN.C. × 2″)	3
64.	14–6614	Screw, outer timing cover (¼″ UN.C. × 2½″)	
65.	57–2641	Oil seal, kickstart spindle	
66.	57–2759	Pedal rubber, kickstart crank	
67.	57–2646	Folding pedal, kickstart crank	
68.	57–2764	Kickstart crank complete	
69.	40–3084	Bolt, kickstart pedal	
70.	40–3085	Spring, kickstart pedal	
71.	97–2704	Ball, kickstart pedal (¼″ diameter)	
72.	14–6610	Screw, outer timing cover (¼″ UN.C. × 1¼″)	
73.	14–6606	Screw, outer timing cover (¼″ UN.C. × ¾″)	
74.	70–9433	Outer timing cover	
75.	57–2642	Bush, kickstart spindle	
76.	40–3275	Spring, kickstart return	
77.	57–4070	Kickstart spindle complete	
78.	40–3292	Bearing, layshaft (Torrington B.108)	

Plate 3—*continued*

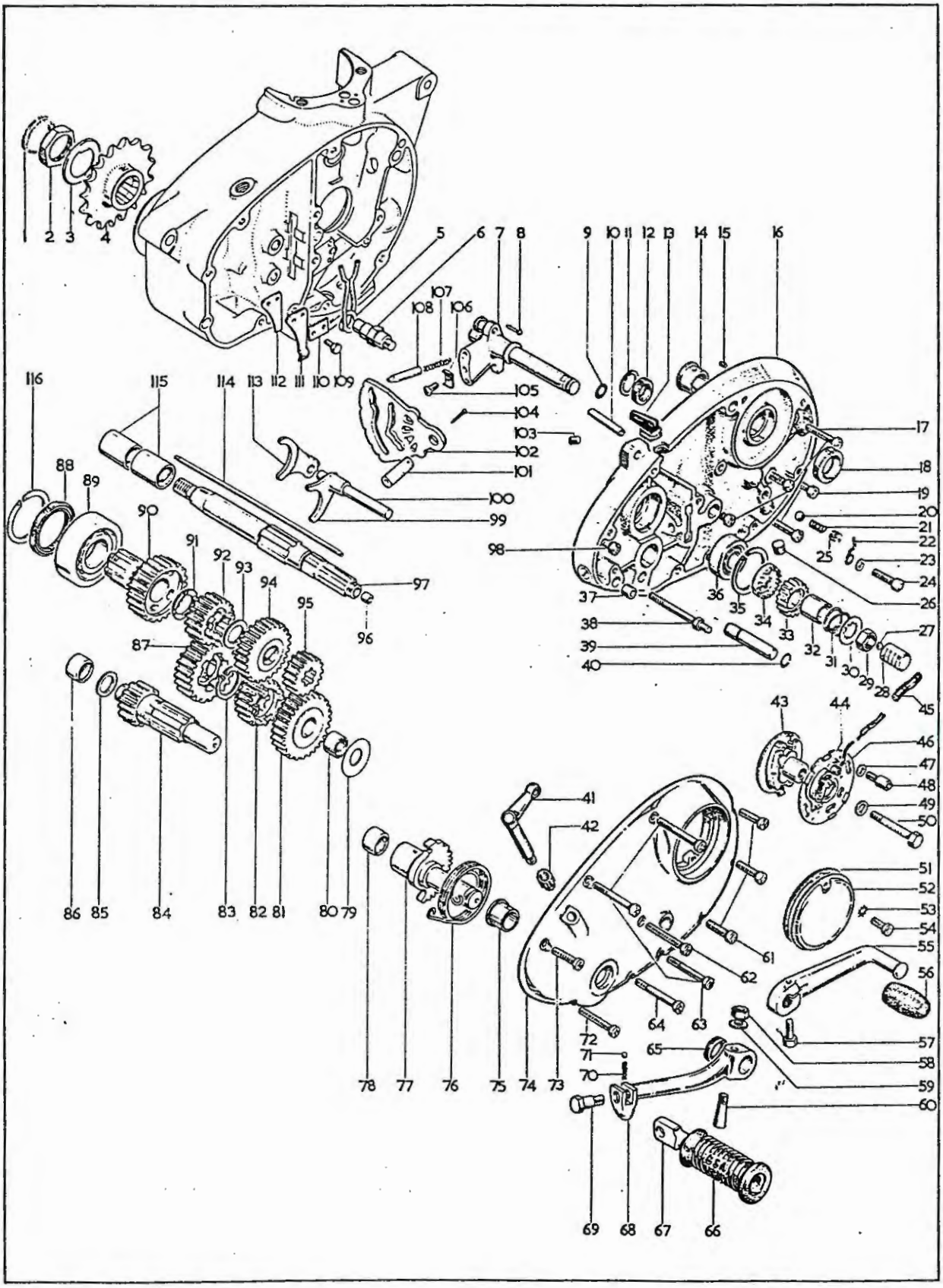

GEAR CLUSTER

Plate Ref.	*Spares Number*	*Description*	*Per Set*
79.	40–3258	Shim, layshaft	
80.	40–3262	Bush, layshaft first gear	
81.	57–3874	Pinion, layshaft first gear (27 teeth)	
82.	57–3877	Pinion, layshaft third gear (19 teeth)	
83.	41–3078	Circlip, layshaft	
84.	41–3068	Layshaft with top gear pinion (14 teeth)	
85.	41–3074	Thrust washer (·083—·085″)	*as reqd.*
85.	41–3072	Thrust washer (·078—·080″)	*os reqd.*
86.	40–3292	Bearing, layshaft (Torrington B.108)	
87.	41–3070	Pinion, layshaft second gear (22 teeth)	
88.	41–3054	Oil seal, mainshaft (Pioneer 20615618)	
89.	29–3857	Bearing, mainshaft (Hoffman 130)	
90.	57–3872	Pinion, mainshaft top gear (22 teeth)	
91.	40–3020	Spacer (·093—·094″)	*as reqd.*
91.	40–3126	Spacer (·098—·099″)	*as reqd.*
91.	40–3127	Spacer (·103—·104″)	*as reqd.*
92.	57–3876	Pinion, mainshaft second gear (21 teeth)	
93.	40–3019	Spacer (·075—·076″)	*as reqd.*
93.	40–3119	Spacer (·070—·071″)	*as reqd.*
93.	40–3120	Spacer (·080—·081″)	*as reqd.*
94.	41–3063	Pinion, mainshaft third gear (24 teeth)	
95.	41–3089	Pinion, mainshaft first gear (16 teeth)	
96.	40–3007	Bush, mainshaft push rod	
97.	40–3254	Mainshaft with bush	
98.	14–6608	Screw, inner timing cover ($\frac{1}{4}$″ UN.C. × 1″)	
99.	40–3033	Selector fork, layshaft	
100.	40–3032	Spindle, selector forks	
101.	40–3291	Cam plate pivot	
102.	57–3850	Cam plate	
103.	53–3049	Screwed plug, mainshaft oil feed	
104.	60–2724	Split pin, cam plate pivot ($\frac{3}{32}$″ × 1″)	
105.	40–3323	Screw, keeper plate (5 B.A. × $\frac{5}{16}$″)	
106.	40–3194	Keeper plate, control quadrant	
107.	40–3155	Spring, gear control plunger	2
108.	40–3193	Plunger, gear control quadrant	2
109.	40–3044	Bolt, cam plate spring (2 B.A. × $\frac{3}{8}$″)	2
110.	40–3045	Lockplate, for bolt line 109	
111.	40–3042	Spring, cam plate	
112.	40–3043	Spring plate	
113.	57–3854	Selector fork, mainshaft	
114.	40–3265	Clutch push rod	
115.	41–3045	Bush, mainshaft top gear	2
116.	70–6026	Circlip, mainshaft oil seal	

*Special material: 2.—EN8. 29.—EN15.

Plate 4

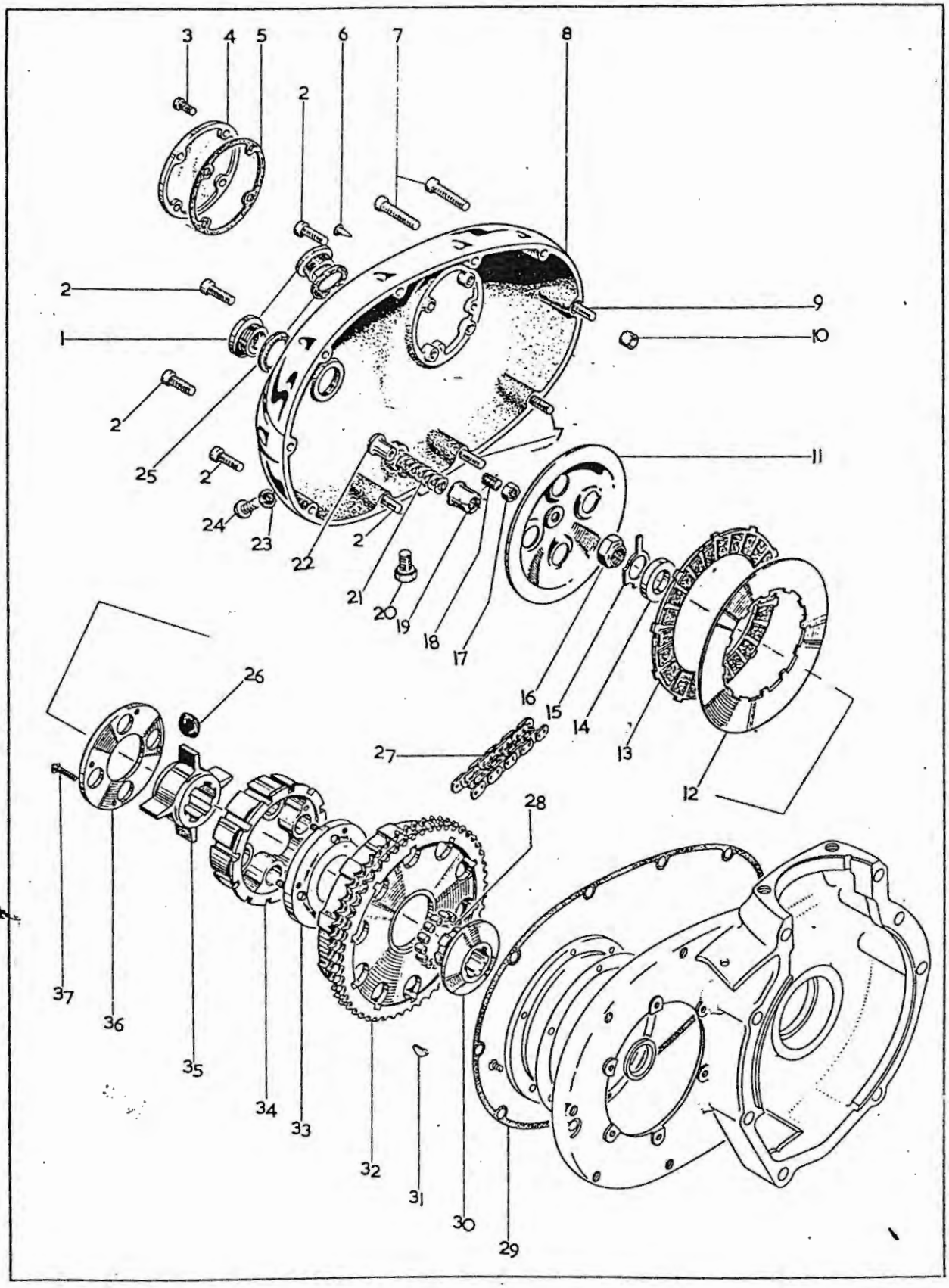
3
4
5
6
7
8
2
2
9
1
10
2
25
2
11
24
23
22
2
21
20
19
18
17
16
15
14
13
12
26
27
28
37
36
35
34
33
32
31
30
29

CLUTCH

Plate Ref.	*Spares Number*	*Description*	*Per Set*
1.	57–2166	Screwed plug, primary cover (1″ × 16 UN.S.)	
1.	70–9800	Screw breather plug, primary cover (1″ × 16 UN.S.)	
2.	14–6610	Screw, short, primary cover (¼″ UN.C. × 1½″)	5
3.	76–4116	Screw, inspection cover (2 B.A. × ½″)	4
4.	68–0839	Timing inspection cover	
5.	68–0840	Cover gasket	
6.	40–1005	Ignition pointer	
7.	14–6611	Screw, long, primary cover (¼″ UN.C. × 1¾″)	4
8.	71–1058	Primary cover assembly	
9.	21–1951	Screw, primary cover (¼″ UN.C. × 1⅞″)	
10.	66–3074	Dowel, primary cover to crankcase	2
11.	57–4019	Clutch pressure plate	
12.	40–3220	Clutch driven plate	5
13.	40–3233	Clutch driving plate	4
14.	40–3234	Retaining washer, clutch	
15.	40–3221	Lockwasher, clutch nut	
16.	40–3227*	Retaining nuts, clutch (½″ B.S.C.)	
17.	02–2395	Nut, clutch adjusting screw (¼″ B.S.C.)	
18.	40–3230	Clutch adjusting screw (¼″ B.S.C. × ⅝″)	
19.	57–3951	Clutch-spring cup	4
20.	21–1943	Drain plug, primary case	
21.	40–3231	Clutch spring	4
22.	40–3219	Clutch spring nut	4
23.	71–1065	Washer, oil level screw	
24.	21–2002	Oil level screw	
25.	70–8782	Washer for primary cover plugs	2
26.	41–3212	Rubber pads, cush drive	8
27.	19–8613	Primary chain (70 pitch)	
28.	40–3206	Roller, clutch hub	25
29.	70–7856	Primary cover gasket	
30.	40–3201	Clutch hub	
31.	40–3150	Key, clutch hub	
32.	47–3214	Chainwheel complete (52 teeth)	
33.	40–3207	Retaining plate (inner)	
34.	41–3210	Clutch centre	
35.	41–3209	Clutch spider	
36.	40–3210	Retaining plate (outer)	
37.	40–3330	Screw, inner and outer retaining plates (1 B.A. × 15/16″)	4
38.	57–4016	Clutch assembly complete	

*Special material: 16.—EN15.

Plate 5

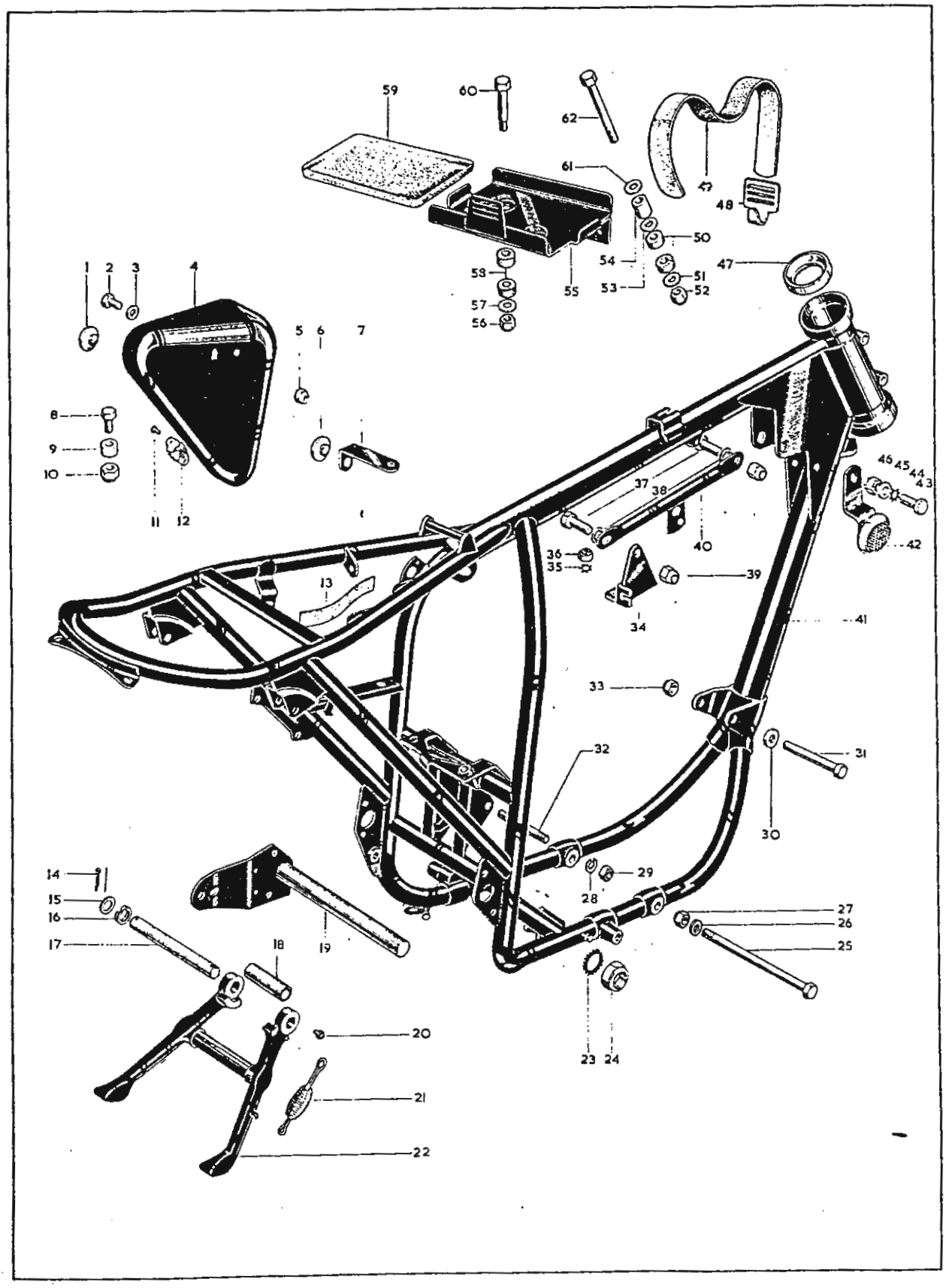
59
60
62
61
49
48
50
54
51
47
53
52
55
58
57
56
1
2
3
4
5
6
7
8
9
10
11
12
13
46
45
44
43
37
38
40
42
36
35
39
34
41
33
32
31
30
14
15
16
17
18
19
29
28
27
26
25
20
23
24
21
22

FRAME

Plate Ref.	*Spares Number*	*Description*	*Per Set*
1.	40–8046	Rubber pad, sidecover	
2.	02–0220	Bolt, tool tray to frame ($\frac{1}{4}$" B.S.C. × $\frac{3}{8}$")	
3.	02–0525	Washer, tool tray to frame ($\frac{1}{4}$" × $\frac{1}{2}$" × ·048")	
4.	40–9172	Tool tray	
5.	40–0414	Nut, for bolt line 2 ($\frac{1}{4}$" B.S.C.)	
6.	40–8046	Rubber pad, sidecover	
7.	40–9187	Bracket for pad	
8.	02–1354	Bolt, tool tray to frame ($\frac{1}{4}$" B.S.C. × $\frac{11}{64}$")	
9.	15–7563	Spacer, tool tray	
10.	40–0414	Nut, for bolt line 8 ($\frac{1}{4}$" B.S.C.)	
11.	68–9337	Rivet for "Oddie" clip	4
12.	68–9115	"Oddie" clip for sidecover	2
13.	40–9188	Adhesive strip for sidecover	
14.	60–2722†	Split pin, centre stand pivot ($\frac{3}{32}$" × $\frac{3}{4}$")	2
15.	15–0039†	Washer, centre stand pivot ($\frac{1}{2}$" × $\frac{27}{32}$" × $\frac{1}{16}$")	2
16.	03–1346†	Spring washer, centre stand pivot ($\frac{17}{32}$" × $\frac{7}{8}$" × ·040")	
17.	82–9124†	Pivot bar, centre stand	
18.	82–9125†	Spacer tube, centre stand	
19.	47–4214	Swinging arm spindle	
20.	47–9012†	Grease nipple, centre stand	2
21.	68–4708†	Spring, centre stand	
22.	82–8686†	Centre stand	
23.	42–4364	Lockwasher, swinging arm spindle	
24.	42–4343	Nut, swinging arm spindle ($\frac{13}{16}$" B.S.C.)	
25.	21–1934*	Bottom engine bolt ($\frac{3}{8}$" UN.F. × 7$\frac{15}{16}$")	
26.	02–2138	Spacer, engine bolt	
27.	14–1803	Nut, bottom engine bolt ($\frac{3}{8}$" UN.F.)	
28.	02–0522	Spring washer, rear engine stud	2
29.	02–0046	Nut, rear engine stud ($\frac{3}{8}$" B.S.C.)	2
30.	02–2138	Spacer, engine bolt	
30.	68–4925†	Spacer, exhaust pipe bracket	
31.	40–4081*	Front engine bolt ($\frac{3}{8}$" B.S.C. × 3$\frac{13}{16}$")	
32.	40–4077*	Rear engine stud ($\frac{3}{8}$" B.S.C. × 2$\frac{9}{16}$")	
33.	42–4475	Nut, front engine bolt ($\frac{3}{8}$" B.S.C.)	

Plate 5—*continued*

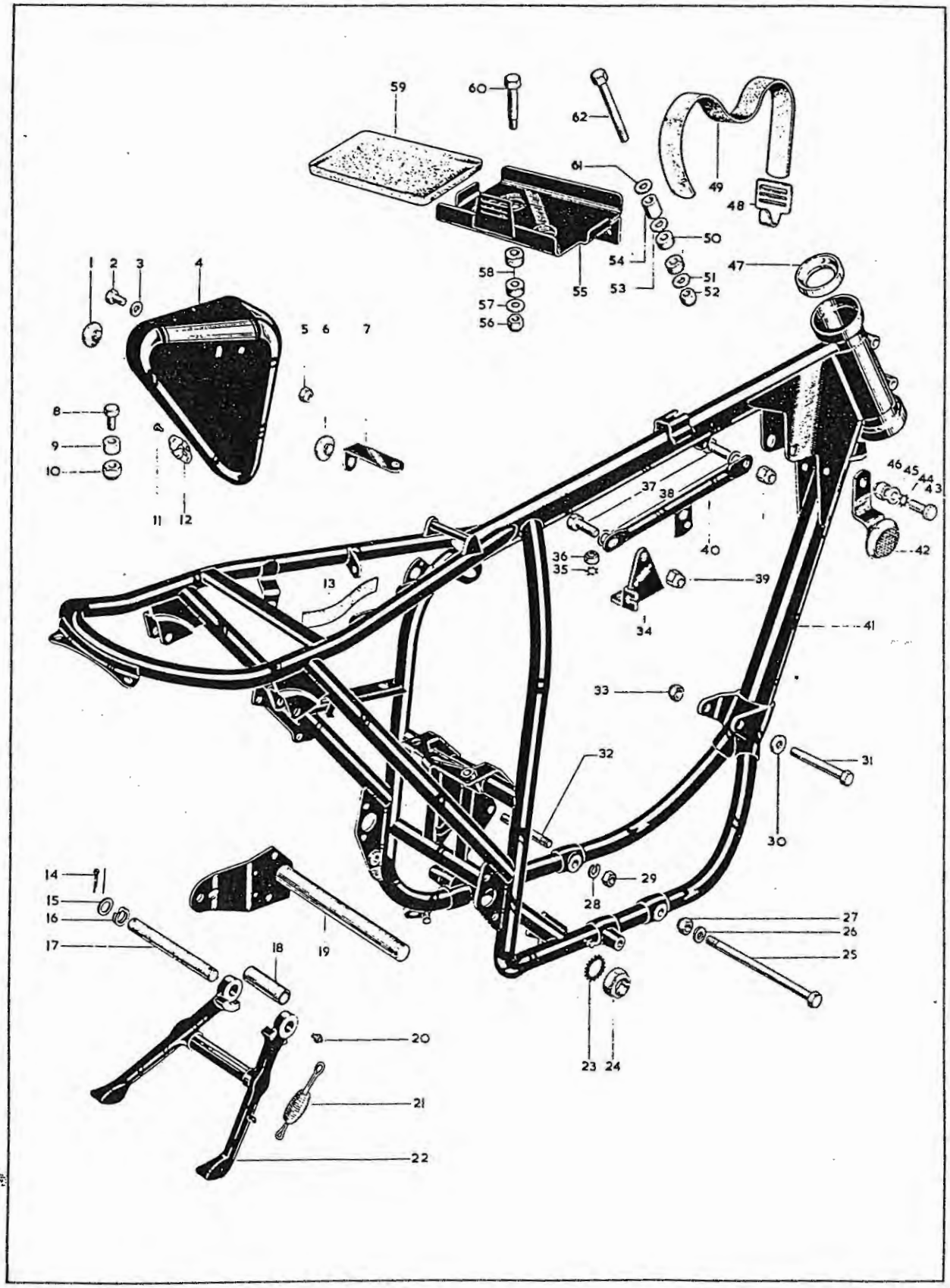

FRAME

Plate Ref.	*Spares Number*	*Description*	*Per Set*
34.	40–0946	Engine steady bracket	
35.	36–0382	Lockwasher, steady bracket ($\frac{5}{16}$")	
36.	02–0049	Nut, steady bracket ($\frac{5}{16}$" B.S.C.)	2
37.	75–4813*	Bolt, steady stay ($\frac{3}{8}$" B.S.C. × $\frac{13}{16}$")	2
38.	02–2138	Washer, steady stay ($\frac{3}{8}$" × $\frac{3}{4}$" × $\frac{1}{16}$")	2
39.	42–4475	Nut, steady stay ($\frac{3}{8}$" B.S.C.)	2
40.	83–1513	Engine steady stay	
41.	82–9213†	Frame complete	
41.	83–1607‡	Frame complete	
42.	19–1035‡	Side reflector, amber (Lucas 57173)	2
43.	75–4813*	Bolt, reflector mounting, right-hand ($\frac{3}{8}$" B.S.C. × $\frac{13}{16}$")	
44.	66–4707	Lockwasher, reflector mounting, right-hand	
45.	02–2138	Washer, reflector mounting, right-hand ($\frac{3}{8}$" × $\frac{3}{4}$" × $\frac{1}{16}$")	
46.	42–4475	Nut, reflector mounting, right-hand ($\frac{3}{8}$" B.S.C.)	
47.	66–4149	Steering head cup	2
48.	82–9004	Strap hook, battery carrier	
49.	68–4577	Battery strap	
50.	40–4524	Rubber bush, battery carrier	2
51.	30–0733	Washer, battery carrier ($\frac{25}{64}$" × $\frac{7}{8}$" × $\frac{1}{16}$")	
52.	42–4475	Nut, battery carrier ($\frac{3}{8}$" B.S.C.)	
53.	30–0733	Washer, battery carrier ($\frac{25}{64}$" × $\frac{7}{8}$" × $\frac{1}{16}$")	
54.	90–4294	Spacer, battery carrier	
55.	82–8285	Battery carrier	
56.	42–4476	Nut, for bolt line 60 ($\frac{5}{16}$" B.S.C.)	2
57.	82–9008	Washer, battery carrier	2
58.	40–4524	Rubber bush, battery carrier	4
59.	68–4597	Rubber mat, battery carrier	
60.	40–4530	Bolt, battery carrier ($\frac{5}{16}$" B.S.C. × 1$\frac{7}{16}$")	2
61.	30–0733	Washer, battery carrier ($\frac{25}{64}$" × $\frac{7}{8}$" × $\frac{1}{16}$")	
62.	65–8326	Bolt, battery carrier ($\frac{3}{8}$" B.S.C. × 3")	

*Special material: 25.—EN15. 31.—EN14B. 32.—EN15. 37.—EN8R. 43.—EN8R.

†U.S.A. models excepted. ‡U.S.A. models only.

Plate 6

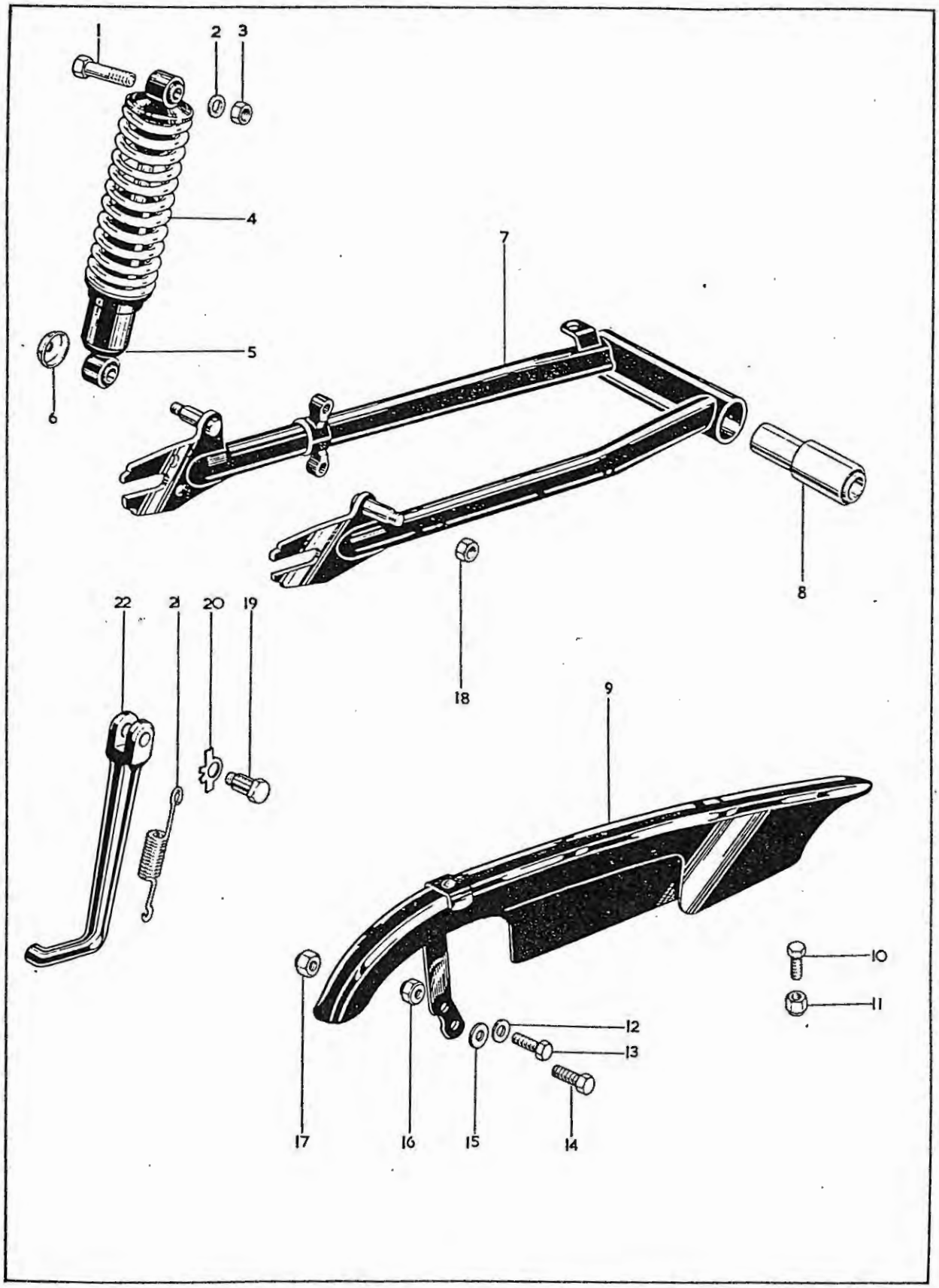

Plate 6

SWINGING ARM

Plate Ref.	*Spares Number*	*Description*	*Per Set*
1.	40–6910*	Bolt, rear damper top mounting ($\frac{3}{8}$" B.S.C. × $1\frac{7}{8}$")	2
2.	02–1733	Washer, rear damper top mounting ($\frac{3}{8}$" × $\frac{13}{16}$" × $\frac{1}{16}$")	2
3.	02–0449	Nut, rear damper top mounting ($\frac{3}{8}$" B.S.C.)	2
4.	19–7441	Rear damper spring (Girling 64543708)	2
5.	19–7452	Rear damper complete (Girling 4644)	2
6.	82–8933	Dust cover, rear damper	2
7.	82–9210	Swinging arm with bushes	
8.	40–4241	Silentbloc bushes, swinging arm	2
9.	82–9950	Rear chainguard	
10.	02–0220	Bolt, chainguard front ($\frac{1}{4}$" B.S.C. × $\frac{3}{8}$")	
11.	40–0414	Nut, chainguard front ($\frac{1}{4}$" B.S.C.)	
12.	02–2138	Washer, chainguard rear ($\frac{3}{8}$" × $\frac{3}{4}$" × $\frac{1}{16}$")	
13.	14–0113	Bolt, chainguard rear ($\frac{5}{16}$" UN.F. × $\frac{3}{8}$")	
14.	67–1171*	Bolt, chainguard and anchor strap ($\frac{3}{8}$" B.S.C. × $1\frac{5}{16}$")	
15.	02–0861	Washer, chainguard and anchor strap ($\frac{3}{8}$" × $\frac{3}{4}$" × $\frac{3}{32}$")	
16.	14–1902	Nut, for bolt line 13 ($\frac{5}{16}$" UN.F.)	
17.	41–4105	Nut, for bolt line 14 ($\frac{3}{8}$" B.S.C.)	
18.	14–0903	Nut, rear damper bottom mounting ($\frac{3}{8}$" UN.F.)	2
19.	40–4733*	Pivot bolt, prop stand ($\frac{3}{8}$" B.S.C. × $1\frac{9}{32}$")	
20.	40–4734	Lockwasher, prop stand pivot	
21.	40–4735	Prop stand spring	
22.	83–1604	Prop stand assembly	

*Special material: **1.**—EN15. **14.**—EN15. **19.**—EN32.

Plate 7

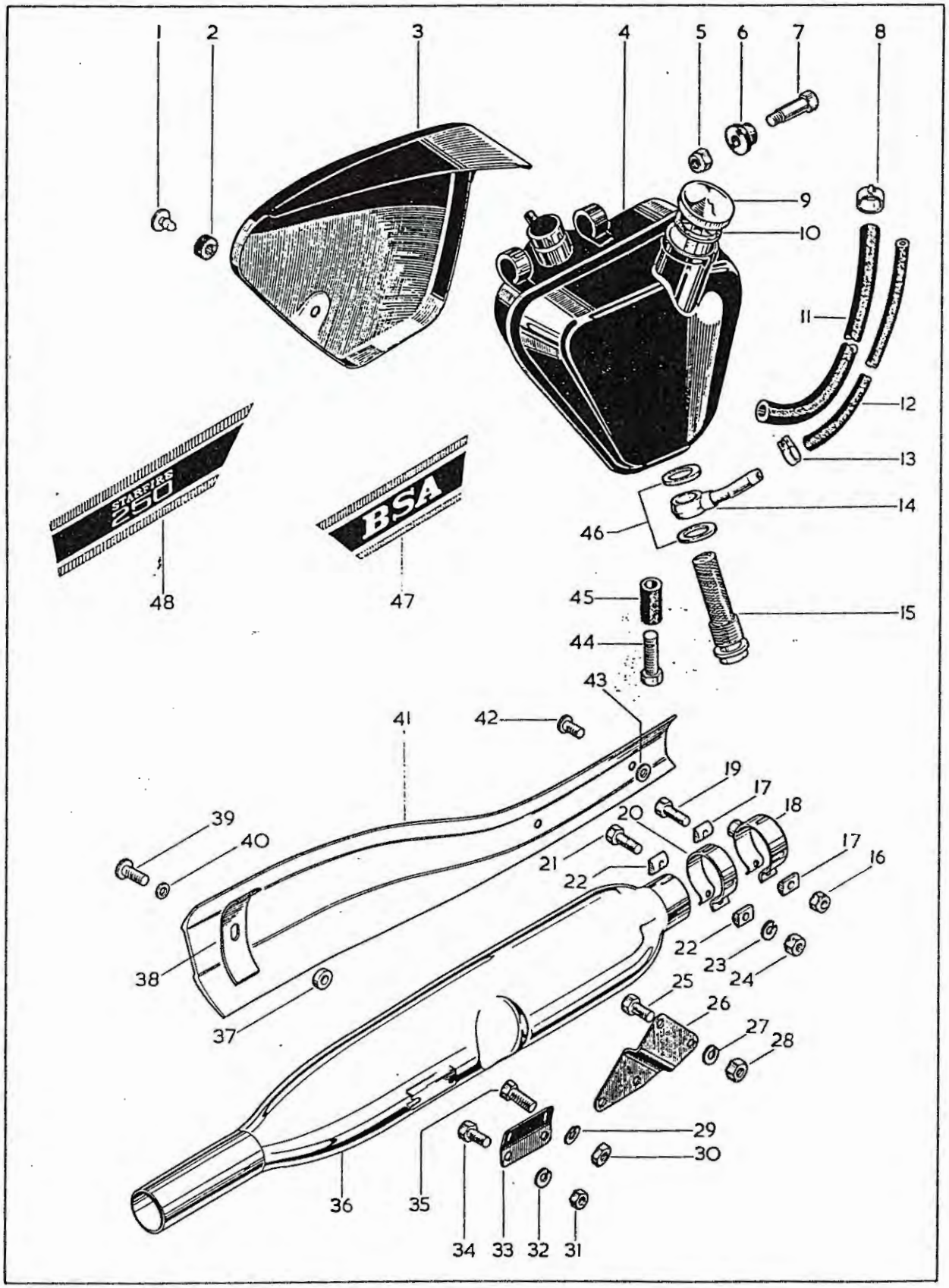
1
2
3
4
5
6
7
8
9
10
11
12
13
14
15
16
17
18
19
20
21
22
23
24
25
26
27
28
29
30
31
32
33
34
35
36
37
38
39
40
41
42
43
44
45
46
47
48
STARFIRE
250
BSA

Plate 7

OIL TANK, SIDECOVER, SILENCER

Plate Ref.	*Spares Number*	*Description*	*Per Set*
1.	68–9287	"Oddie" stud (long)	
1.	68–9223	"Oddie" stud (short)	
2.	68–9226	Rubber bush, "Oddie" stud	3
2.	68–9227	Rubber bush, "Oddie" stud	
3.	82–8614	Sidecover	
4.	83–1648	Oil tank with fixed fittings	
5.	42–3249	Nut, oil tank mounting ($\frac{1}{4}$" B.S.C.)	2
6.	40–8436	Rubber bush, tank mounting	2
7.	40–8435	Bolt, Tank top mounting ($\frac{1}{4}$" B.S.C. × $1\frac{3}{4}$")	2
8.	68–8343	Clip, oil return pipe	2
9.	83–1651	Filler cap, oil tank	
10.	67–0042	Filler cap washer	
11.	40–8382	Oil return pipe	
12.	68–8383	Oil feed pipe	
13.	68–8382	Clip, oil feed pipe	2
14.	82–8874	Oil pipe banjo connection	
15.	29–7962	Oil tank filter	
16.	14–1302	Nut, exhaust pipe clip (U.S.A.) $\frac{5}{16}$" UN.F.	2
17.	75–2719	"D" washer, clip (U.S.A.)	4
18.	71–1184	Clip, heat shield (U.S.A.)	2
19.	14–0219	Bolt, heat shield clip (U.S.A.) $\frac{5}{16}$" UN.F. × $1\frac{1}{2}$"	2
20.	70–5874	Silencer clip	
20.	75–2725	Silencer clip (U.S.A.)	
21.	14–0219	Bolt, silencer $\frac{5}{16}$" UN.F. × $1\frac{1}{2}$"	
22.	75–2719	"D" washer, silencer clip	2
23.	54–8003	Spring washer, silencer clip	
24.	21–1908	Nut, silencer clip ($\frac{5}{16}$" UN.F.)	
25.	14–0115	Bolt, bracket to frame (U.S.A.) $\frac{5}{16}$" UN.F. × $\frac{7}{8}$"	2
26.	71–1182	Silencer bracket (U.S.A.)	
27.	24–8784	Spring washer, bracket bolt (U.S.A.)	2
28.	14–0302	Nut, bracket to frame (U.S.A.) $\frac{5}{16}$" UN.F.	2

Plate 7—*continued*

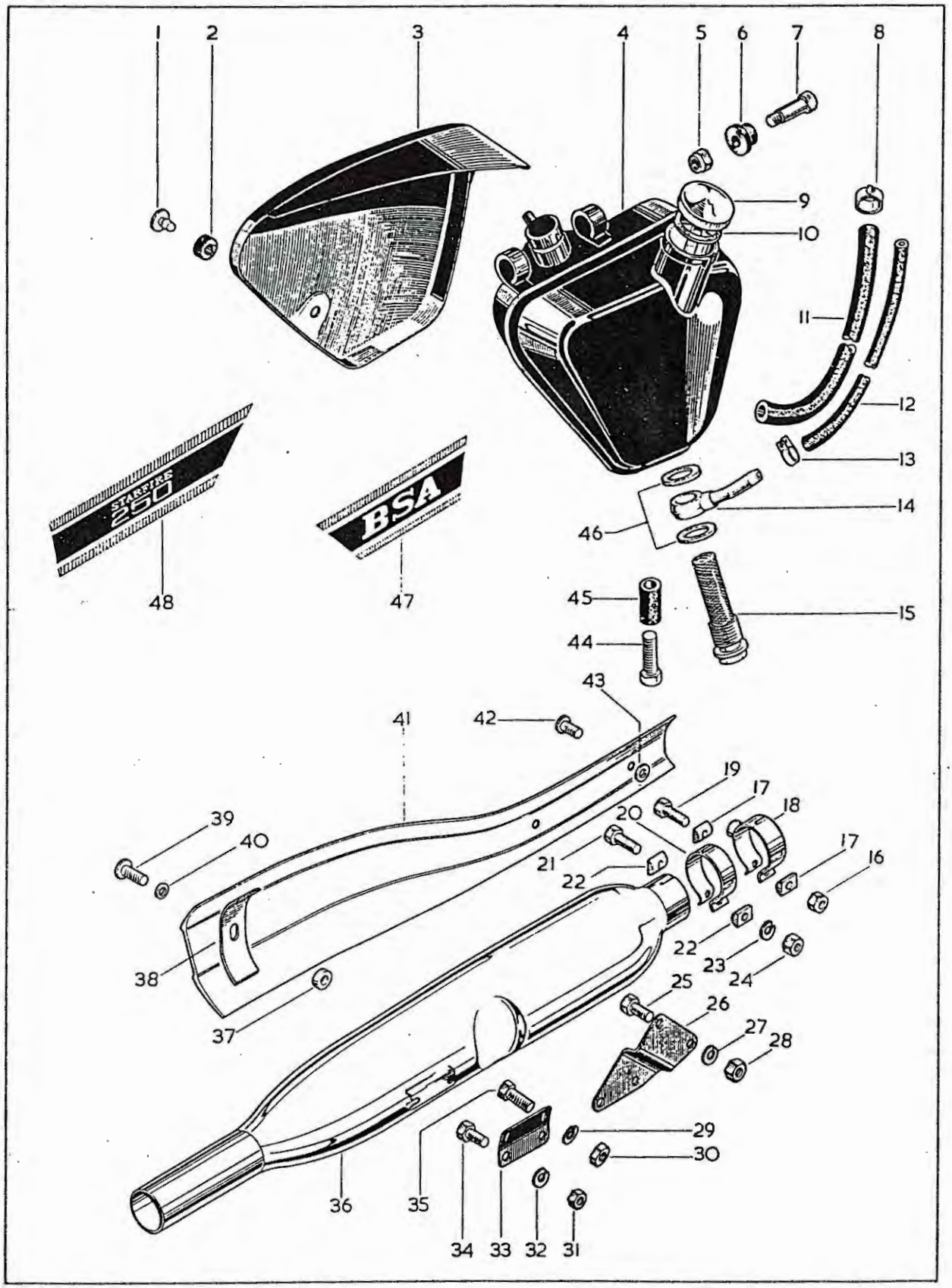

Plate 7—*continued*

OIL TANK, SIDECOVER, SILENCER

Plate Ref.	*Spares Number*	*Description*	*Per Set*
29.	02–2903	Spring washer, bracket to frame (Standard)	2
30.	02–0046	Nut, bracket to frame (Standard) $\frac{3}{8}''$ B.S.C.	2
31.	02–2395	Nut, bracket to silencer $\frac{1}{4}''$ B.S.C.	2
32.	82–9020	Spring washer, bracket to silencer	2
33.	40–2844	Silencer Bracket (Standard)	
34.	02–0204	Bolt, bracket to silencer ($\frac{1}{4}''$ B.S.C. × $\frac{1}{2}''$)	2
35.	24–0649	Bolt, bracket ($\frac{3}{8}''$ B.S.C. × $\frac{7}{8}''$)	2
36.	70–9652	Silencer complete (Standard)	
36.	71–1181	Silencer complete (U.S.A.)	
37.	71–1223	Spacer, exhaust pipe shield (U.S.A.)	
38.	71–1222*	Support strip, heat shield (U.S.A.)	
39.	14–2206	Screw-rear, heat shield (U.S.A.) $\frac{1}{4}''$ UN.F. × $\frac{3}{4}''$	
40.	68–0331	Washer, heat shield screw (U.S.A.)	3
41.	71–1221	Heat shield (U.S.A.)	
42.	14–2205	Front screw, heat shield (U.S.A.) $\frac{1}{4}''$ UN.F. × $\frac{5}{8}''$	2
43.	60–2338	Backing washer, heat shield (U.S.A.)	2
44.	21–0771	Lower bolt, oil tank ($\frac{5}{16}''$ UN.F. × $1\frac{3}{4}''$)	
45.	40–8401	Rubber grommet, lower bolt	
46.	29–7971	Fibre washer, banjo connection	2
47.	60–2377	Oil tank transfer (U.S.A.)	
47.	60–2376	Oil tank transfer (Standard)	
48.	60–2378	Sidecover transfer (U.S.A.)	
48.	60–2376	Sidecover transfer (Standard)	

*71–1222 Support strip is now cancelled

Plate 8

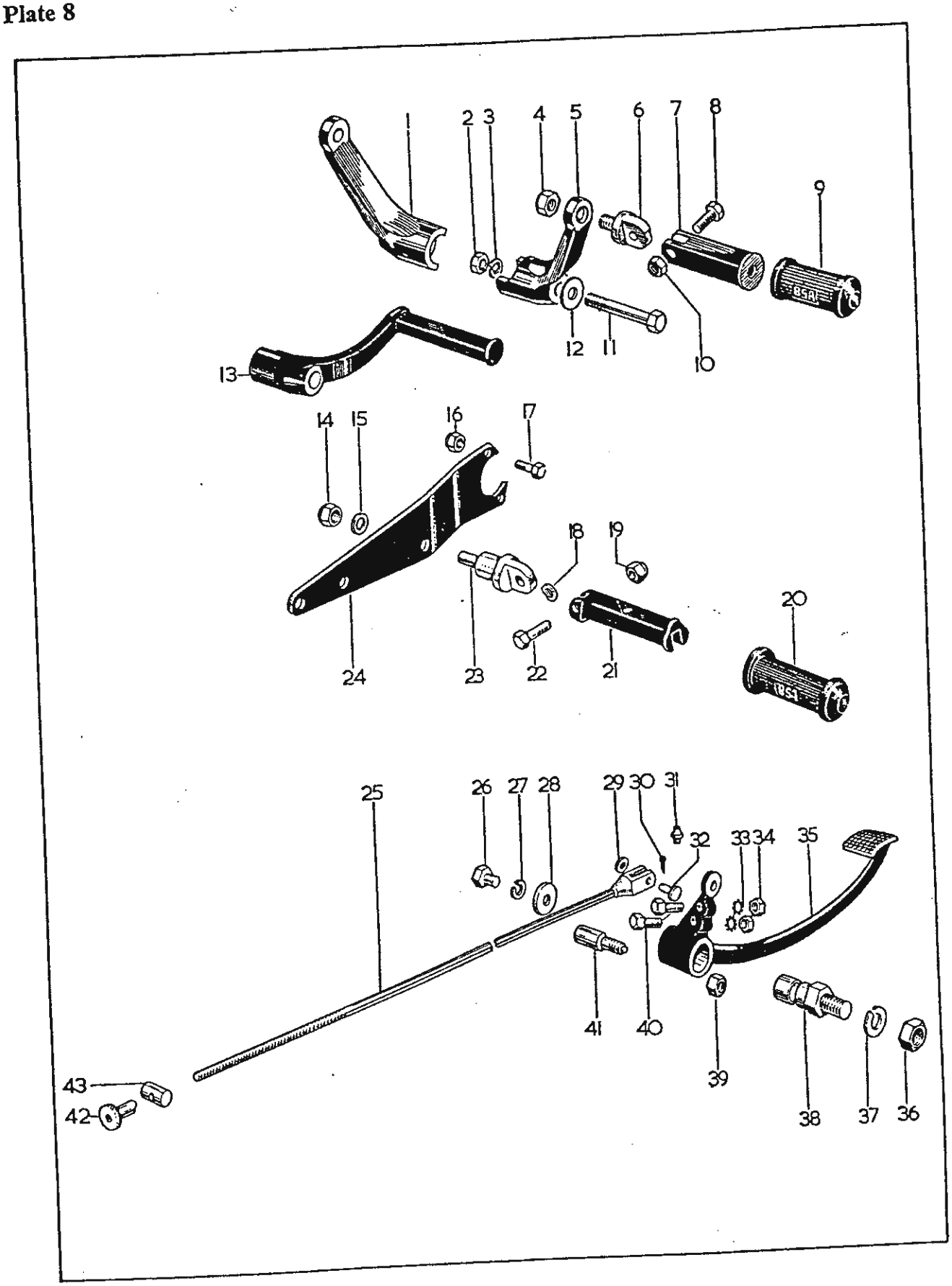
1
2
3
4
5
6
7
8
9
10
11
12
13
14
15
16
17
18
19
20
21
22
23
24
25
26
27
28
29
30
31
32
33
34
35
36
37
38
39
40
41
42
43

Plate 8

FOOTRESTS AND BRAKE LINKAGE

Plate Ref.	*Spares Number*	*Description*	*Per Set*
1.	83–1426	Footrest bracket for folding footrest (U.S.A.)	
2.	02–0046	Nut, footrest bracket to frame, right-hand ($\frac{3}{8}$" B.S.C.)	
3.	02–0522	Spring washer, footrest bracket to frame (right-hand)	
4.	41–4105	Nut, anchor bolt to bracket—U.S.A. ($\frac{3}{8}$" B.S.C.)	2
5.	83–1428	Footrest bracket for folding footrest (U.S.A.)	
6.	65–4917	Anchor bolt, folding footrest (U.S.A.)	2
7.	42–4926	Folding footrest (U.S.A.)	2
8.	29–5293	Bolt, footrest to anchor bolt—U.S.A. ($\frac{5}{16}$" B.S.C. × $1\frac{1}{4}$")	2
9.	82–9608	Folding footrest rubber (U.S.A.)	2
9.	82–9602	Footrest rubber	2
10.	42–4476	Nut, footrest to anchor bolt—U.S.A. ($\frac{5}{16}$" B.S.C.)	2
11.	68–4081*	Bolt, footrest bracket to frame, right-hand ($\frac{3}{8}$" B.S.C. × $2\frac{15}{16}$")	
12.	27–5676	Washer, footrest bracket to frame, (right-hand)	
13.	83–0256	Footrest left-hand	2
13.	41–4863	Footrest, right-hand	2 *or* 1
14.	41–4105	Nut, pillion footrest anchor bolt ($\frac{3}{8}$" B.S.C.)	2 *or* 1
14.	14–0303	Nut, pillion footrest anchor bolt, left-hand—U.S.A. ($\frac{3}{8}$" UN.F.)	
15.	02–2138	Washer, pillion footrest anchor bolt ($\frac{3}{8}$" × $\frac{3}{4}$" × $\frac{1}{16}$")	2
16.	14–0702	Nut, bracket to frame ($\frac{5}{16}$" UN.F.)	3
17.	14–0116	Bolt, bracket to frame ($\frac{5}{16}$" UN.F. × 1")	3
18.	04–2276	Washer, pillion footrest	2
19.	42–4476	Nut, pillion footrest pivot bolt ($\frac{5}{16}$" B.S.C.)	2
20.	82–9603	Pillion footrest rubber	2
21.	68–4835	Pillion footrest	2
22.	29–5293	Bolt, pillion footrest pivot ($\frac{5}{16}$" B.S.C. × $1\frac{1}{4}$")	2
23.	40–4820	Anchor bolt (left-hand)	
23.	82–8507	Anchor bolt, left-hand (U.S.A.)	
23.	65–4917	Anchor bolt (right-hand)	
24.	41–4835	Bracket, right-hand (U.S.A.)	
24.	82–9943	Bracket (right-hand)	
25.	41–7037	Rear brake rod	
26.	40–6030*	Bolt, brake pedal to pivot ($\frac{3}{8}$" B.S.C. × $\frac{3}{4}$")	
27.	03–0111	Spring washer, brake pedal to pivot ($\frac{13}{32}$" × $\frac{39}{64}$" × ·104")	
28.	30–0196	Washer, brake pedal to pivot ($\frac{3}{8}$" × $1\frac{1}{8}$" × $\frac{1}{8}$")	
29.	02–0525	Washer, brake rod to pedal ($\frac{1}{4}$" × $\frac{1}{2}$" × ·048")	
30.	60–2683	Split pin, brake rod to pedal ($\frac{1}{16}$" × $\frac{3}{8}$")	
31.	28–2080	Grease nipple, brake pedal	
32.	83–1460	Pivot pin, brake rod to pedal	
33.	29–0541	Lockwasher, pedal adjuster bolt	2
34.	02–1027	Nut, pedal adjuster ($\frac{1}{4}$" B.S.C.)	2
35.	47–7013	Rear brake pedal	
36.	02–1925	Nut, brake pedal pivot ($\frac{7}{16}$" B.S.C.)	
37.	02–1967	Spring washer, brake pedal pivot ($\frac{7}{16}$" × $\frac{7}{8}$" × $\frac{1}{16}$")	
38.	41–7007	Pivot pin, brake pedal	
39.	14–0702	Nut, brake pedal stop ($\frac{5}{16}$" UN.F.)	
40.	47–7003	Bolt, brake pedal adjuster ($\frac{1}{4}$" B.S.C.)	2
41.	82–9958	Brake pedal stop	
42.	90–7029	Adjuster nut, brake rod ($\frac{1}{4}$" B.S.F.)	
43.	65–6274	Swivel pin, brake rod	

*Special material: 11.—EN15. 26.—EN14B.

Plate 9

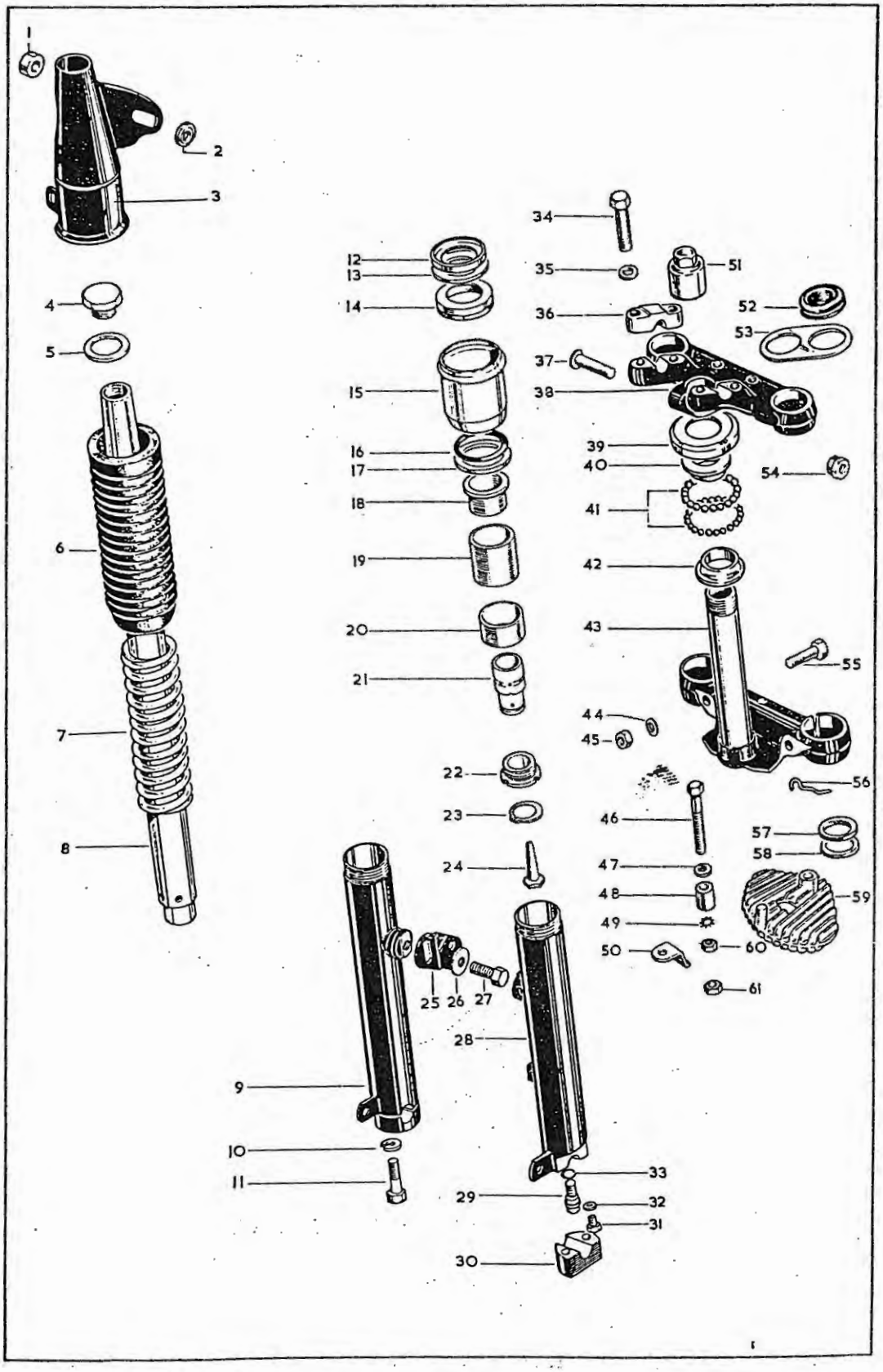
1
2
3
4
5
6
7
8
9
10
11
12
13
14
15
16
17
18
19
20
21
22
23
24
25
26
27
28
29
30
31
32
33
34
35
36
37
38
39
40
41
42
43
44
45
46
47
48
49
50
51
52
53
54
55
56
57
58
59
60
61

Plate 9

FRONT FORK

Plate Ref.	*Spares Number*	*Description*	*Per Set*
1.	68–5108	Spacer, headlamp mounting	2
2.	68–5104	Washer, headlamp mounting	2
3.	97–3693	Fork sleeve (left-hand)	
3.	97–3694	Fork sleeve (right-hand)	
4.	97–2245	Top cap nut, fork shaft ($1\frac{1}{16}$" × 28 UN.F.)	2
5.	65–5332	Washer for cap nut	2
6.	97–2513	Fork bellows	2
7.	97–3678	Fork spring	2
8.	97–3906	Fork shaft	2
9.	97–3921	Sliding tube (left-hand)	
10.	54–8003	Spring washer, end cap bolt	4
11.	14–0218	Bolt, fork end cap ($\frac{5}{16}$" UN.F. × $1\frac{1}{8}$")	4
12.	97–3638	Spring support	2
13.	97–1656	Spring support washer	2
14.	75–5099	Fork oil seal	2
15.	97–3639	Oil seal holder	2
16.	75–5199	Fork "O" ring	2
17.	75–5088	Outer washer	2
18.	75–5105	Fork top bearing bush	2
19.	97–3672	Fork inner sleeve	2
20.	75–5104	Fork lower bearing bush	2
21.	97–2154	Shuttle valve	2
22.	97–2091	Fork shaft plug	2
23.	97–2127	Shuttle valve circlip	2
24.	97–2090	Valve restrictor	2
25.	97–3669	Mounting bracket, front mudguard (right-hand)	
25.	97–3680	Mounting bracket, front mudguard (left-hand)	
26.	54–5504	Washer, bracket bolt	2
27.	21–1822	Bolt, mounting bracket ($\frac{5}{16}$" UN.F. × $\frac{1}{2}$")	2
28.	97–3922	Sliding tube (right-hand)	
29.	97–2126	Bolt, valve restrictor ($\frac{1}{4}$" UN.F. × $1\frac{3}{32}$")	2
30.	75–5095	Fork end cap	2
31.	97–0519	Fork drain plug	2

Plate 9—*continued*

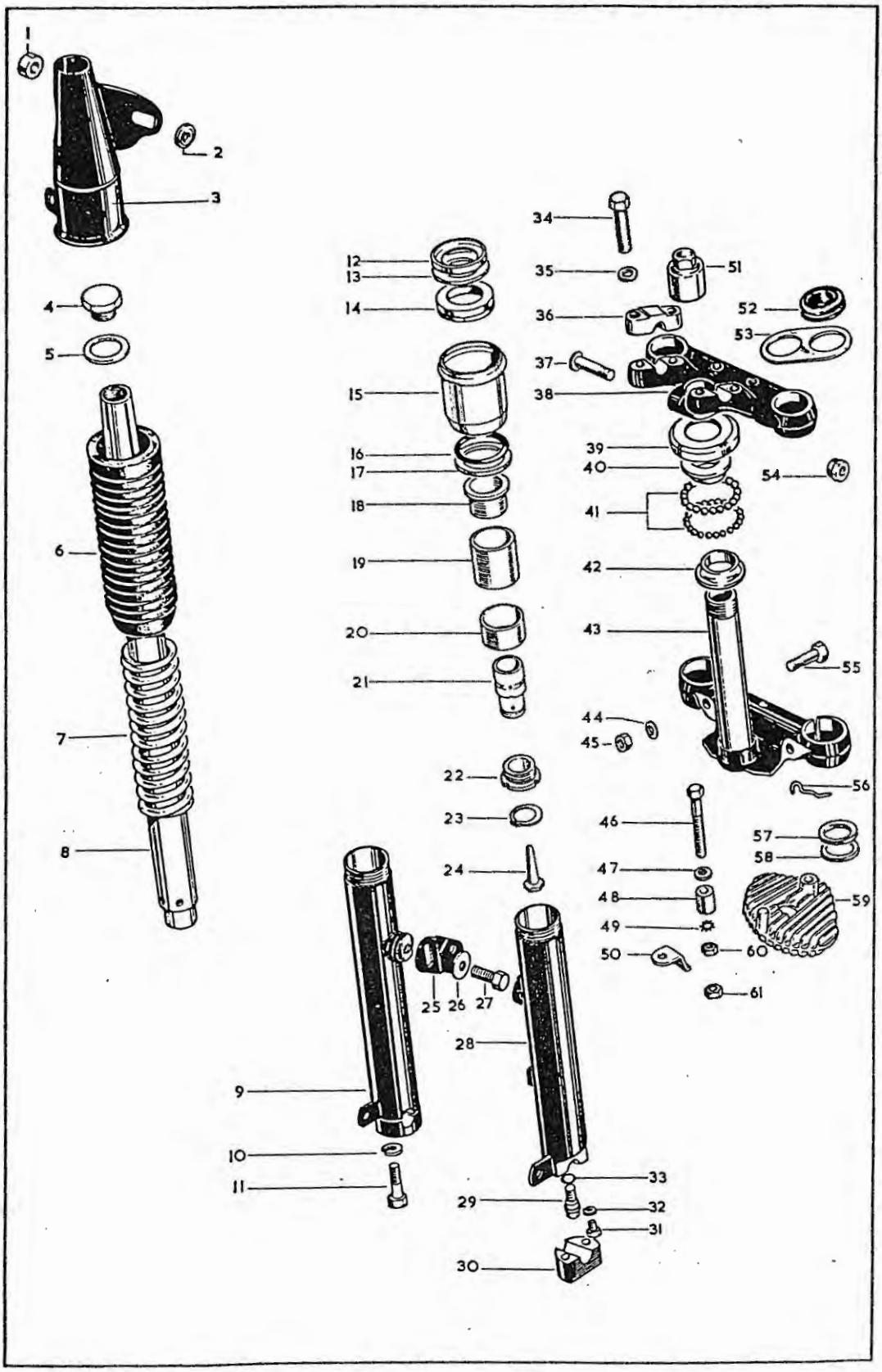

FRONT FORK

Plate Ref.	*Spares Number*	*Description*	*Per Set*
32.	54–0042	Washer, fork drain plug	2
33.	40–5069	Sealing washer, restrictor bolt	2
34.	68–5056	Bolt, handlebar clamp ($\frac{5}{16}$" B.S.C. × $1\frac{1}{8}$")	4
35.	15–5155	Washer, handlebar clamp bolt ($\frac{21}{64}$" × $\frac{1}{2}$" × ·048")	4
36.	65–5333	Handlebar clamp	2
37.	27–5135	Bolt, top yoke	
38.	97–2525	Fork top yoke	
39.	40–5145	Dust cap, steering head top cone	
40.	40–5143	Top cone, steering head	
41.	97–2704	Steel ball, steering head $\frac{1}{4}$" diameter)	40
42.	40–5144	Bottom cone, steering head	
43.	97–2526	Fork bottom yoke	
44.	02–2138	Washer, pinch bolt ($\frac{3}{8}$" × $\frac{3}{4}$" × $\frac{1}{16}$")	2
45.	14–0303	Nut, pinch bolt ($\frac{3}{8}$" UN.F.)	2
46.	40–9134	Bolt, diode heat sink ($\frac{5}{16}$" B.S.C. × 3")	
47.	02–0923	Washer, heat sink bolt ($\frac{5}{16}$" × $\frac{5}{8}$" × $\frac{1}{16}$")	2
48.	29–9388	Spacer, heat sink	
49.	36–0382	Lockwasher, heat sink bolt ($\frac{5}{16}$")	
50.	68–9429	Diode retainer	
51.	40–5018	Adjusting cap, steering head	
52.	76–9325	Grommet, cable guide (U.S.A.)	2
53.	68–5137	Cable guide (U.S.A.)	2
54.	64–6016	Nut, fork top yoke pinch bolt ($\frac{3}{8}$" B.S.C.)	
55.	21–0785*	Bolt, bottom yoke ($\frac{3}{8}$" UN.F. × $2\frac{7}{16}$")	2
56.	40–5090	Cable guide clip	
57.	47–5065	Sealing washer	2
58.	47–5064	Seal retainer	4
59.	68–9428	Diode heat sink	
60.	02–0049	Nut, heat sink bolt ($\frac{5}{16}$" B.S.C.)	
61.	75–3144	Nut, heat sink bolt ($\frac{5}{16}$" B.S.C.)	
	97–3895	Front fork complete	

*Special material: 55.—EN15.

Plate 10

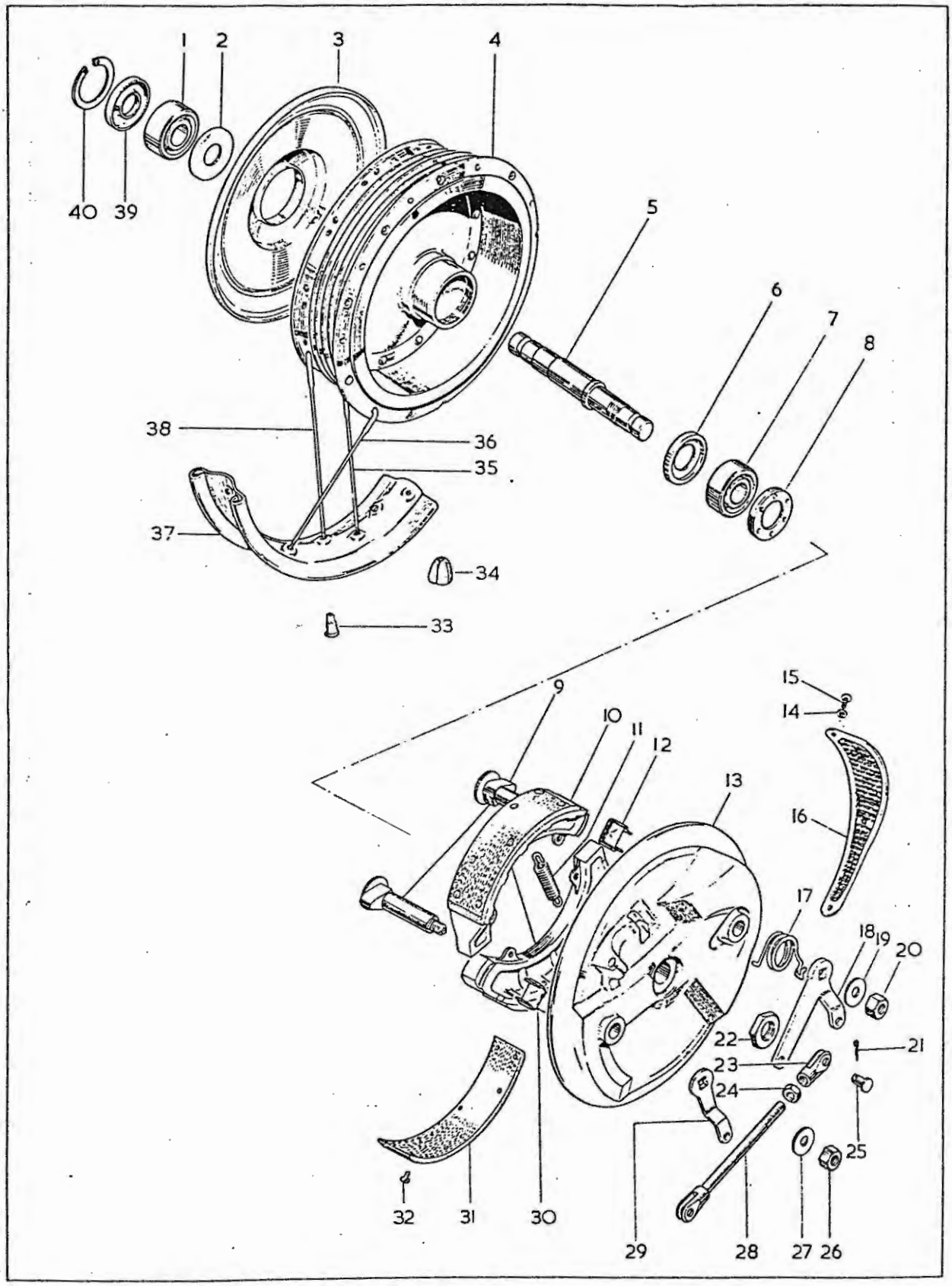
1
2
3
4
40
39
5
6
7
8
38
36
35
37
34
33
9
10
11
12
13
15
14
16
17
18
19
20
22
21
23
24
25
32
31
30
29
28
27
26

Plate 10

FRONT WHEEL

Plate Ref.	*Spares Number*	*Description*	*Per Set*
1.	42–5819	Bearing (Hoffman 120)	
2.	37–1481	Grease cap (left-hand)	
3.	37–3443	Cover plate (left-hand)	
4.	37–3466	Hub with spindle and bearings	
5.	37–3582	Wheel spindle	
6.	37–3337	Bearing backing ring (right-hand)	
7.	42–5819	Bearing (Hoffman 120)	
8.	42–6335	Bearing retainer	
9.	37–2001	Brake cam spindle	2
10.	37–3446	Brake shoe complete	2
11.	42–5841	Brake shoe spring	2
12.	37–2026	Pivot pad, brake shoe	
13.	37–2130	Brake plate with gauze	
14.	82–2351	Washer, for screw line 15	3
15.	21–1998	"Taptite" screw, gauze air scoop (4–40 × $\frac{5}{16}$")	3
16.	37–3444	Gauze, air scoop	
17.	37–3522	Return spring, brake lever	
18.	37–3453	Front brake lever (front)	
19.	37–2027	Washer, lever to cam spindle	
20.	14–0403	Nut, lever to cam spindle ($\frac{3}{8}$" UN.F.)	
21.	60–2683	Split pin, rod to lever	3
22.	21–1995	Spindle nut, brake plate ($\frac{1}{4}$" × 20 UN.F.)	
23.	37–2005	Fork end, brake rod	
24.	14–0401	Locknut, fork end to rod ($\frac{1}{4}$" UN.F.)	
25.	42–5836	Pivot pin, rod to lever	3
26.	14–0403	Nut, lever to cam spindle ($\frac{3}{8}$" UN.F.)	
27.	37–2027	Washer, lever to cam spindle	
28.	37–3450	Brake rod assembly	
29.	37–3454	Front brake lever (rear)	
30.	37–2026	Pivot pad, brake shoe	
31.	19–7736	Brake lining	2
32.	42–5840	Rivet, brake lining	16
33.	37–2136	Spoke nipple	40
34.	37–1197	Balance weight ($\frac{3}{4}$")	*as reqd.*
34.	37–1198	Balance weight (1")	*as reqd.*
35.	37–2134	Spoke, right-hand inner	10
36.	37–2135	Spoke, right-hand outer	10
37.	37–1373	Wheel rim (WM2–18)	
38.	37–2133	Spoke (left-hand)	20
39.	42–5820	Dust cover (left-hand)	
40.	57–0280	Dust cover circlip (left-hand)	
	37–3455	Brake plate assembly with brake details	
	37–3463	Wheel complete with spindle and bearings	

Plate 11

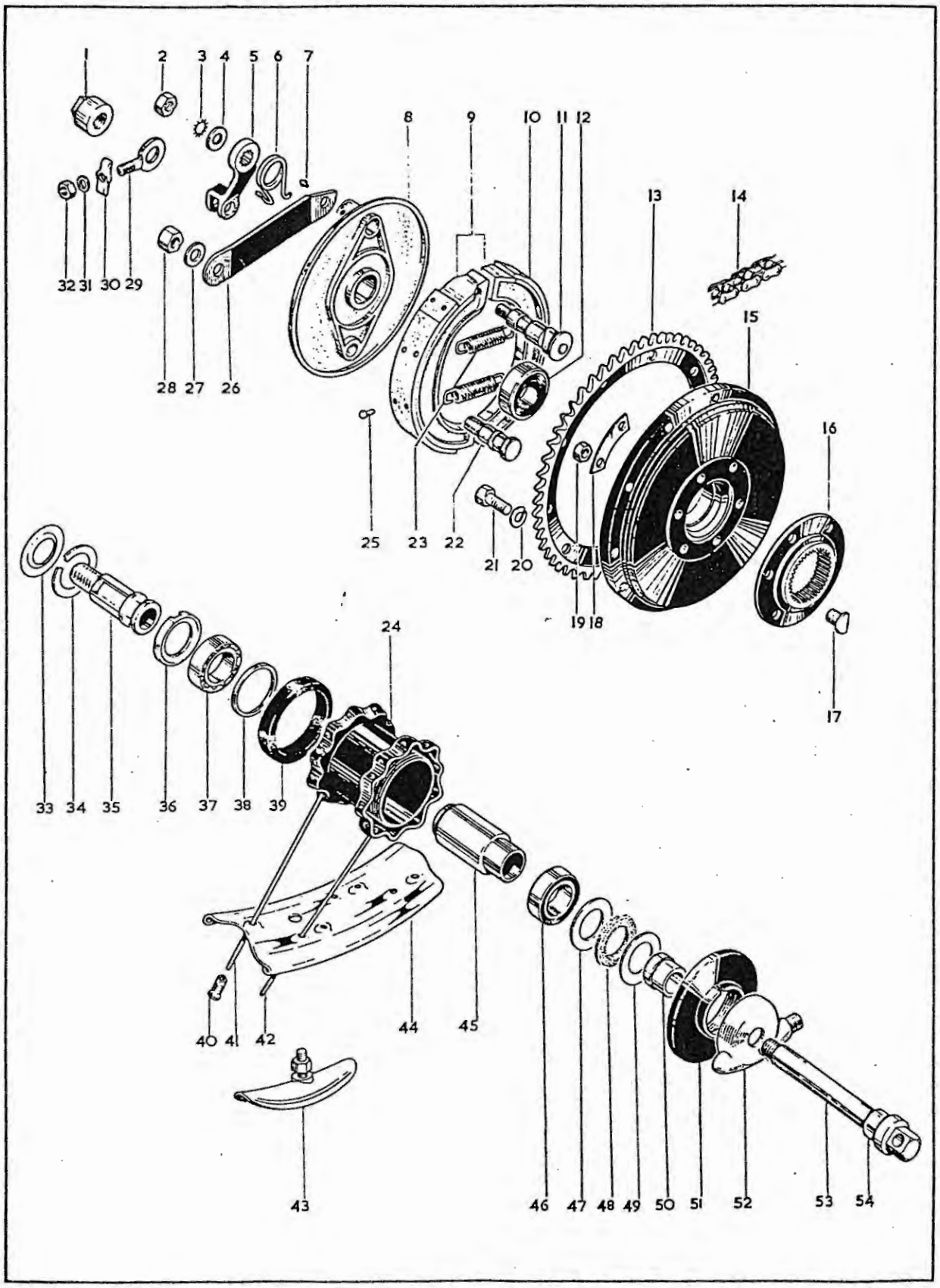
1
2
3
4
5
6
7
8
9
10
11
12
13
14
15
16
17
18
19
20
21
22
23
24
25
26
27
28
29
30
31
32
33
34
35
36
37
38
39
40
41
42
43
44
45
46
47
48
49
50
51
52
53
54

Plate 11

REAR WHEEL

Plate Ref.	*Spares Number*	*Description*	*Per Set*
1.	68–6066	Nut, fixed spindle	
2.	02–0440	Nut, brake lever to cam spindle ($\frac{7}{16}$" B.S.C.)	
3.	66–4708	Lockwasher, brake lever to cam spindle	
4.	15–0431	Washer, brake lever to cam spindle ($\frac{7}{16}$" × $\frac{3}{4}$" × $\frac{1}{16}$")	
5.	42–6045	Brake lever	
7.	28–2080	Grease nipple, cam spindle	
8.	41–6093	Brake anchor plate	
9.	65–5940	Rear brake shoe complete	2
10.	19–7717	Brake lining	2
11.	37–2226	Brake cam spindle	
12.	65–5883	Brake drum bearing (Hoffman LS.9)	
13.	41–6091	Rear chainwheel (49 teeth)	
14.	19–8687	Rear chain (100 pitch)	
15.	41–6090	Rear Brake drum	
16.	42–6019	Driving flange	
17.	67–6038*	Bolt, hub to drum ($\frac{3}{8}$" B.S.C.)	6
18.	68–6135	Lockplate, for nut line 19	3
19.	02–0452	Nut, hub to drum ($\frac{3}{8}$" B.S.C.)	6
20.	24–8784	Spring washer, chainwheel to drum	10
21.	68–6095*	Bolt, chainwheel to drum ($\frac{5}{16}$" UN.F. × $\frac{13}{32}$")	10
22.	68–6133	Fulcrum pin, brake shoe	
23.	65–5904	Return spring, brake shoe	2
24.	41–6022	Rear hub with spindle and bearings	
25.	35–6436	Rivet, brake lining	14
26.	41–6094	Brake anchor strap	
26.	68–6134	Brake lever return spring	
27.	65–5111	Washer, fulcrum pin	
28.	24–7000	Nut, fulcrum pin ($\frac{1}{2}$" B.S.C.)	

Plate 11—*continued*

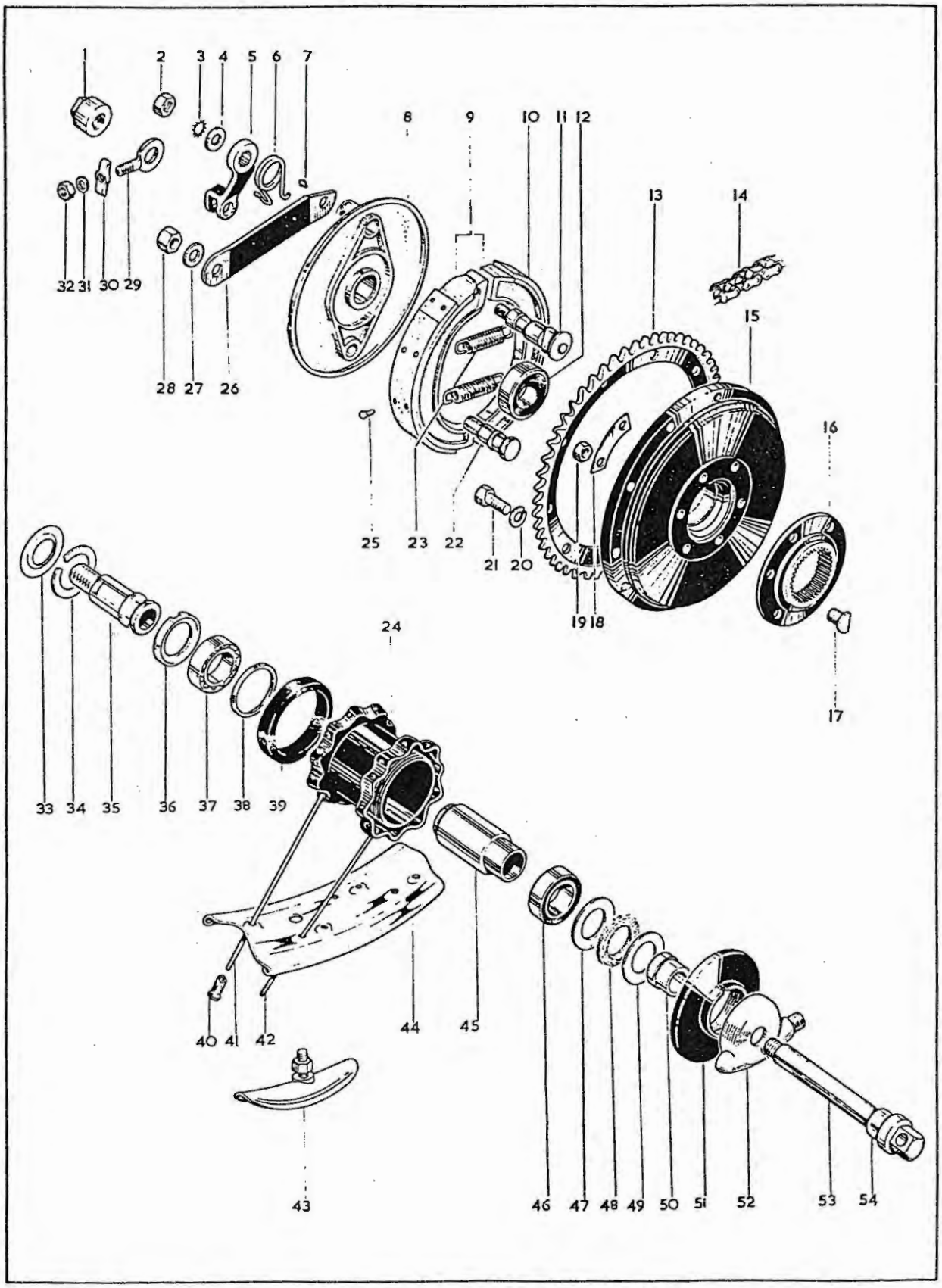

Plate 11—*continued*

REAR WHEEL

Plate Ref.	*Spares Number*	*Description*	*Per Set*
29.	40–6033	Rear wheel adjuster	2
30.	40–6040	Adjuster cap	2
31.	02–0923	Washer, wheel adjuster ($\frac{5}{16}$" × $\frac{5}{8}$" × $\frac{1}{16}$")	2
32.	42–4476	Nut, wheel adjuster ($\frac{5}{16}$" B.S.C.)	2
33.	67–6033	Shim, brake drum bearing	
34.	67–6034	Retainer, brake drum bearing	
35.	41–6032	Fixed spindle	
36.	68–6081	Retainer, left-hand hub bearing	
37.	41–6016	Hub bearing (Hoffman LS.9RS)	
38.	65–5884	Thrust washer, left-hand bearing	
39.	67–6051	Rubber seal ring	
40.	27–6810	Spoke nipple	40
41.	42–6011	Spoke (left-hand)	20
42.	42–6012	Spoke (right-hand)	20
43.	37–3469	Security bolt	
44.	40–6080	Wheel rim (WM2–18)	
45.	67–6027	Spindle sleeve	
46.	41–6016	Hub bearing (Hoffman LS.9RS)	
47.	65–5887	Retaining ring, felt washer	
48.	65–5886	Felt washer	
49.	41–6021	Outer retaining ring, felt washer	
50.	41–6019	Spacer, inner right-hand	
51.	68–6142	Hub end cover	
52.	19–9212	Speedometer gearbox—2 to 1 ratio (BG.5330/31)	
53.	41–6098	Hub spindle	
54.	41–6082	Spacer, outer right-hand	
	40–6078	Rear wheel with spindle and bearings	

*Special material: 17.—EN14B. 21.—EN14B.

Plate 12

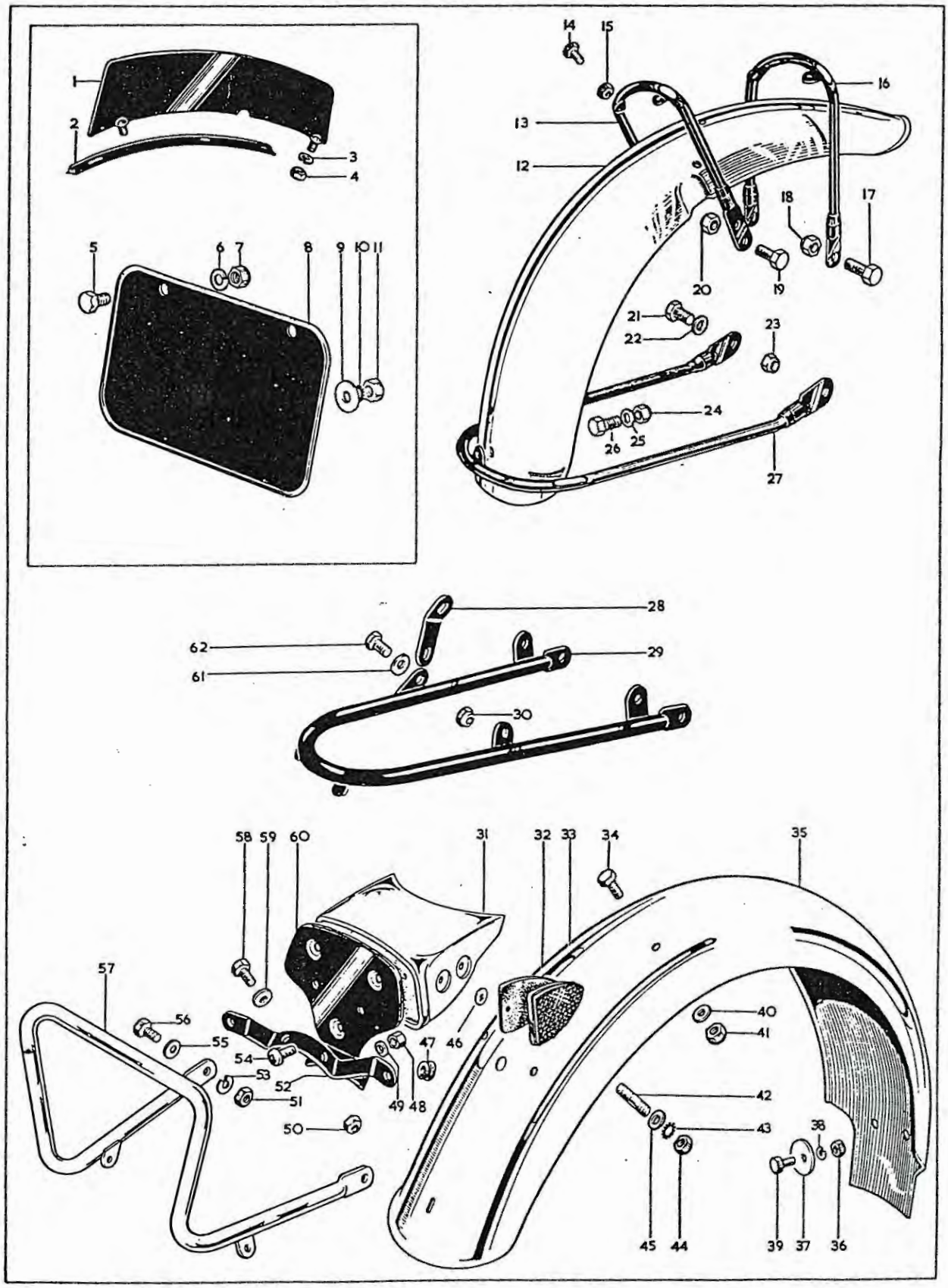
1
2
3
4
5
6
7
8
9
10
11
14
15
16
13
12
18
17
20
19
21
22
23
24
26
25
27
28
62
29
61
30
58
59
60
31
32
33
34
35
57
56
55
54
53
52
51
50
47
46
49
48
40
41
42
43
38
45
44
39
37
36

MUDGUARDS

Plate Ref.	*Spares Number*	*Description*	*Per Set*
1.	90–6576	Front number plate	
2.	42–6558	Beading, front number plate	
3.	82–9020	Spring washer, front number plate ($\frac{1}{4}$" × $\frac{19}{32}$" × ·040")	2
4.	02–2395	Nut, front number plate ($\frac{1}{4}$" B.S.C.)	2
5.	14–0604	Bolt, rear number plate ($\frac{1}{4}$" B.S.C. × $\frac{7}{16}$")	2
6.	82–9020	Spring washer, rear number plate ($\frac{1}{4}$" × $\frac{19}{32}$" × ·040")	2
7.	14–0301	Nut, rear number plate ($\frac{1}{4}$" B.S.C.)	2
8.	83–1559	Rear number plate	
9.	27–8560	Washer, rear number plate ($\frac{1}{4}$" × $\frac{5}{8}$" × ·048")	
10.	29–0541	Lockwasher, rear number plate	
11.	14–0301	Nut, rear number plate ($\frac{1}{4}$" U.N.F.)	
12.	90–6579	Front mudguard	
12.	90–6580	Front mudguard (U.S.A.)	
13.	82–8393	Centre stay, front mudguard	
14.	02–0204	Bolt, stay to mudguard ($\frac{1}{4}$" B.S.C. × $\frac{1}{2}$")	4
15.	42–3249	Nut, stay to mudguard ($\frac{1}{4}$" B.S.C.)	4
16.	82–8392	Front stay, front mudguard	
17.	15–0518	Bolt, stays to bracket ($\frac{5}{16}$" B.S.C. × $1\frac{1}{32}$")	2
18.	75–6594	Nut, stays to bracket ($\frac{5}{16}$" B.S.C.)	2
19.	27–6037	Bolt, stays to bracket ($\frac{5}{16}$" B.S.C. × $\frac{7}{8}$")	2
20.	75–6594	Nut, stays to bracket ($\frac{5}{16}$" B.S.C.)	2
21.	14–0114	Bolt, stay to fork end ($\frac{5}{16}$" UN.F. × $\frac{3}{4}$")	2
22.	54–0055	Washer, stay to fork end	2
23.	14–0702	Nut, stay to fork end ($\frac{5}{16}$" UN.F.)	2
24.	75–6594	Nut, stay to mudguard ($\frac{5}{16}$" B.S.C.)	
25.	02–0923	Washer, stay to mudguard ($\frac{5}{16}$" × $\frac{5}{8}$" × $\frac{1}{16}$")	
26.	67–8313	Bolt, stay to mudguard ($\frac{5}{16}$" B.S.C. × $\frac{1}{2}$")	
27.	97–3685	Bottom stay, front mudguard	
28.	68–6802	Bracket, support rail	2
29.	41–6782	Support rail	
30.	75–6594	Nut, rail to frame ($\frac{5}{16}$" B.S.C.)	2
31.	83–0270	Tail lamp support	
32.	82–8140	Rubber pad, reflector	2

Plate 12—*continued*

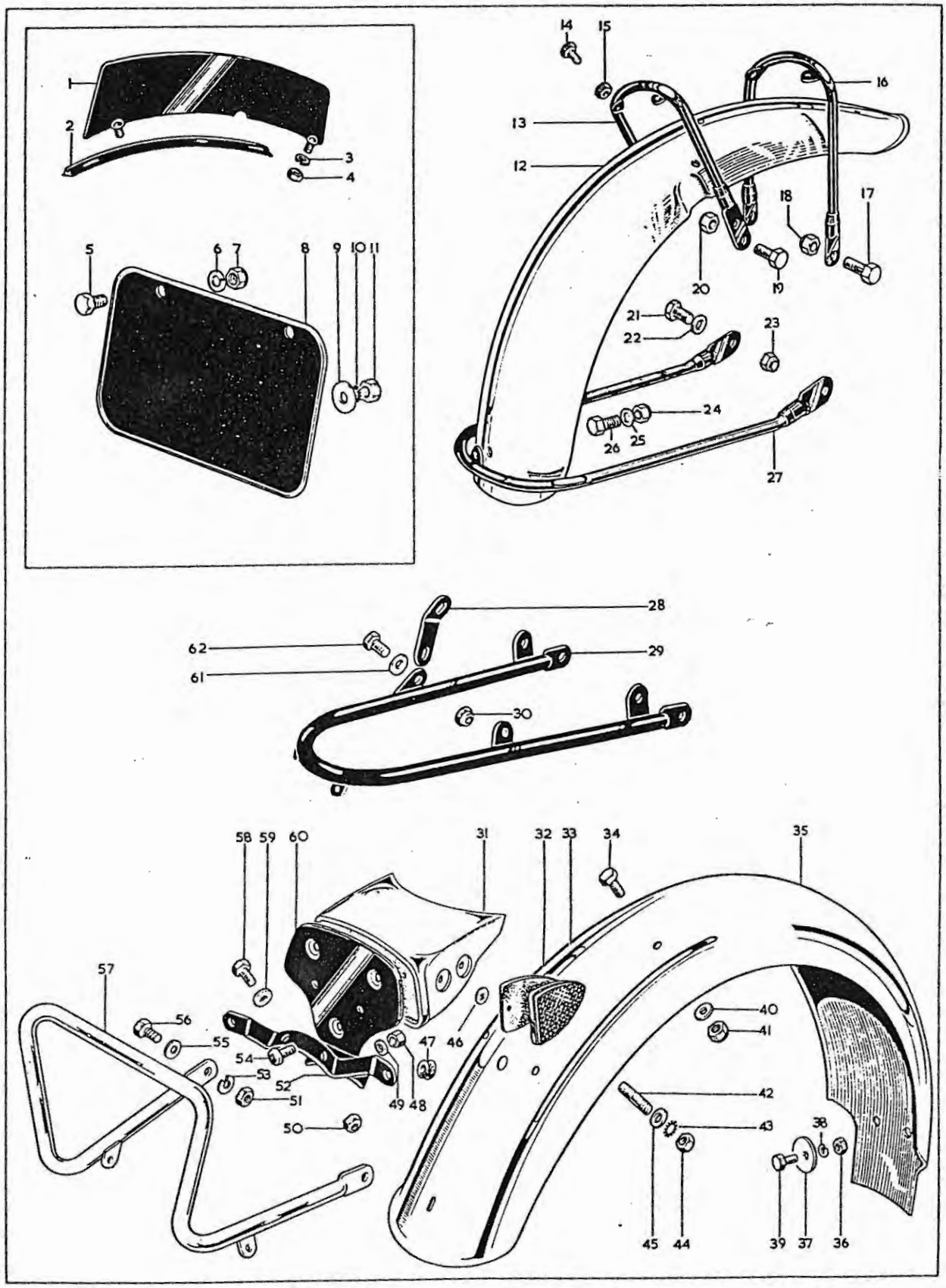

MUDGUARDS

Plate Ref.	*Spares Number*	*Description*	*Per Set*
33.	19–0943	Rear side reflector—red (Lucas 57111)	2
34.	28–2338	Bolt, rear guard to top rail ($\frac{5}{16}$" B.S.C. × $\frac{23}{32}$")	2
35.	82–9988	Rear mudguard	
35.	82–9989	Rear mudguard (U.S.A.)	
36.	02–2395	Nut, rear guard to frame ($\frac{1}{4}$" B.S.C.)	2
37.	40–6790	Washer, rear guard to frame	2
38.	82–9020	Spring washer, rear guard to frame ($\frac{1}{4}$" × $\frac{19}{32}$" × ·040")	2
39.	02–0204	Bolt, rear guard to frame ($\frac{1}{4}$" B.S.C. × $\frac{1}{2}$")	2
40.	02–0923	Washer, rear guard to top rail ($\frac{5}{16}$" × $\frac{5}{8}$" × $\frac{1}{16}$")	2
41.	42–4476	Nut, rear guard to top rail ($\frac{5}{16}$" B.S.C.)	2
42.	70–2980*	Stud, tail lamp support ($\frac{1}{4}$" B.S.C./W.F. × $\frac{15}{16}$")	
43.	54–9081	Lockwasher, tail lamp support	
44.	42–3249	Nut, tail lamp support stud ($\frac{1}{4}$" B.S.C.)	
45.	57–3638	Spacer, tail lamp support	
46.	82–8195	"Push-fix" rear reflector	4
47.	67–6839	Wiring grommet	2
48.	21–5161	Nut, for screw line 54 (2 B.A.)	
49.	54–0170	Washer, for screw line 54	
50.	40–0414	Nut, number plate bracket ($\frac{1}{4}$" B.S.C.)	2
51.	02–0049	Nut, handrail to support rail ($\frac{5}{16}$" B.S.C.)	2
52.	68–6834	Number plate bracket	
53.	24–8784	Spring washer, handrail to support rail ($\frac{5}{16}$" × $\frac{5}{8}$" × ·040")	2
54.	54–9012	Screw, tail lamp to support rail (2 B.A. × $\frac{13}{32}$")	3
55.	02–0923	Washer, handrail to support rail ($\frac{5}{16}$" × $\frac{5}{8}$" × $\frac{1}{16}$")	2
56.	27–6742	Bolt, handrail to support rail ($\frac{5}{16}$" B.S.C. × $\frac{27}{64}$")	2
57.	41–9152	Handrail	
58.	02–0204	Bolt, number plate bracket ($\frac{1}{4}$" B.S.C. × $\frac{1}{2}$")	2
59.	27–8560	Washer, number plate bracket ($\frac{1}{4}$" × $\frac{5}{8}$" × ·048")	2
60.	68–6835	Tail lamp support plate	
61.	02–0923	Washer, rail to frame ($\frac{5}{16}$" × $\frac{5}{8}$" × $\frac{1}{16}$")	2
62.	28–2338	Bolt, rail to frame ($\frac{5}{16}$" B.S.C. × $\frac{23}{32}$")	2

*Special material: 42.—EN8.

Plate 13

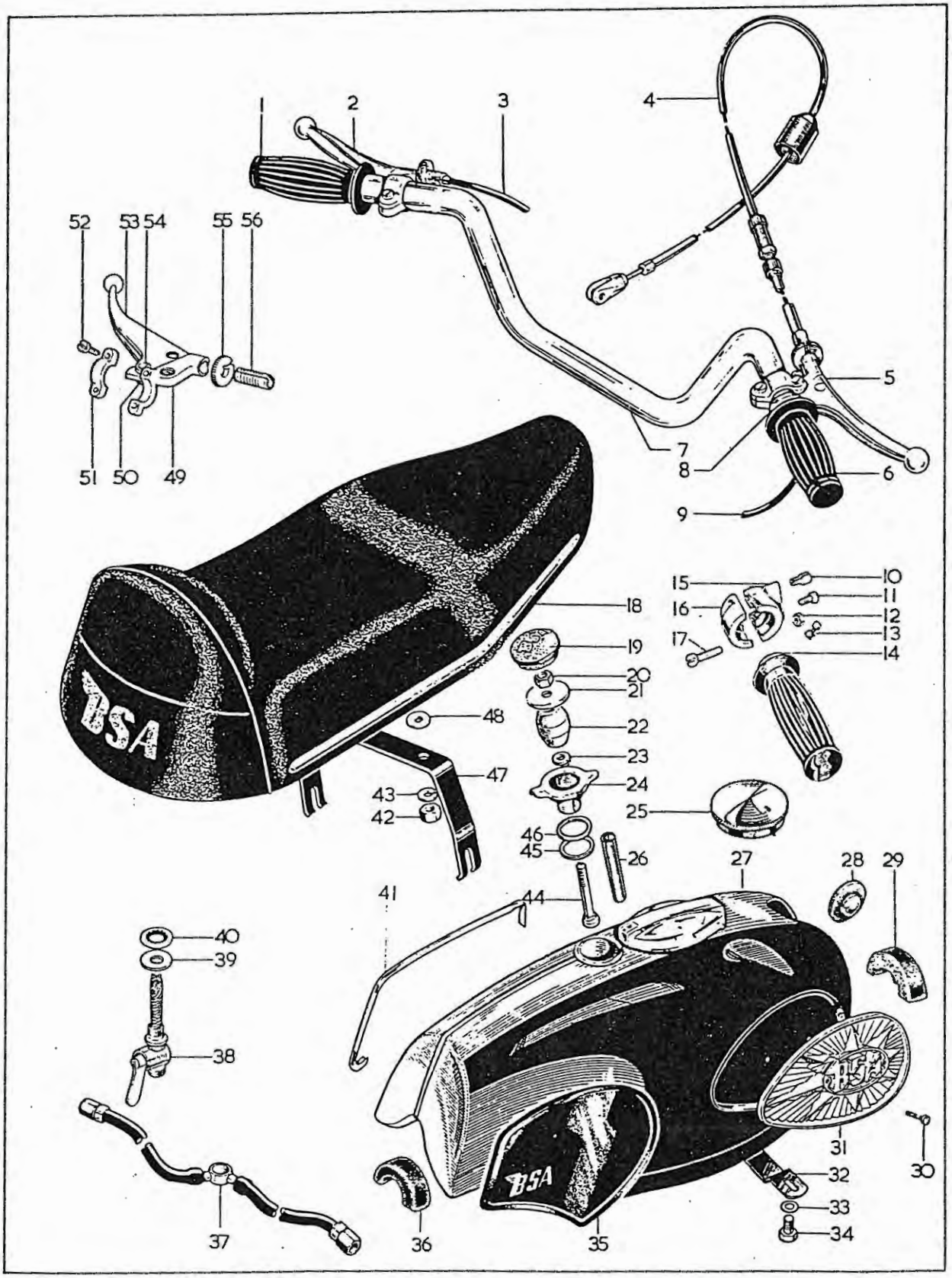
1
2
3
4
5
6
7
8
9
10
11
12
13
14
15
16
17
18
19
20
21
22
23
24
25
26
27
28
29
30
31
32
33
34
35
36
37
38
39
40
41
42
43
44
45
46
47
48
49
50
51
52
53
54
55
56
BSA
BSA
BSA

Plate 13

PETROL TANK, TWINSEAT AND CONTROLS

Plate Ref.	*Spares Number* B.S.A. NO.	MAKERS NO.	*Description*	*Per Set*
1.	19–7221		Rubber grip, left-hand	
2.	60–2442	19/952M	Clutch control complete	
3.	60–2082		Clutch cable (standard)	
3.	60–2083		Clutch cable (U.S.A.)	
4.	60–2053		Front brake cable (standard)	
4.	60–2034		Front brake cable (U.S.A.)	
5.	60–2443	19/1098M	Front brake control complete	
6.	19–7222		Rubber grip, right-hand	
7.	68–4968		Handlebar (standard)	
7.	40–4960		Handlebar (U.S.A.)	
8.	19–7223	16/364	Throttle control complete	
9.	40–8657		Throttle control cable	
10.		16/011	Cable stop	
11.		16/009	Friction spring screw	
12.		16/010	Friction spring nut	
13.		16/008	Friction spring	
14.		16/091	Rotor, throttle control	
15.		16/329	Body, bottom half	
16.		16/328	Body, top half	
17.		11/013	Clamp screw	2
18.	82–9732		Twinseat complete	
19.	42–8010		Grommet, petrol tank	
20.	68–8014		Nut, tank mounting ($\frac{5}{16}$" B.S.C.) standard	
20.	02–0049		Nut, tank mounting ($\frac{5}{16}$" B.S.C.) U.S.A.	
21.	68–8016		Washer, tank mounting (standard)	
21.	82–9008		Washer, tank mounting (U.S.A.)	
22.	42–8017		Mounting rubber, petrol tank	
23.	76–0012		Washer, tank mounting (standard)	
23.	02–0923		Washer, tank mounting (U.S.A.)	
24.	82–9782		Beading holder, petrol tank (standard)	
25.	75–8009		Filler cap, petrol tank (U.S.A.)	
26.	41–4043		Spacer, tank mounting (U.S.A.)	
26.	41–8011		Spacer, tank mounting (standard)	
27.	82–9729		Petrol tank (standard)	
27.	82–9801		Petrol tank (U.S.A.)	
28.	82–9730		Anti-roll rubber (standard)	2
28.	42–8052		Anti-roll rubber (U.S.A.)	2

Plate 13—*continued*

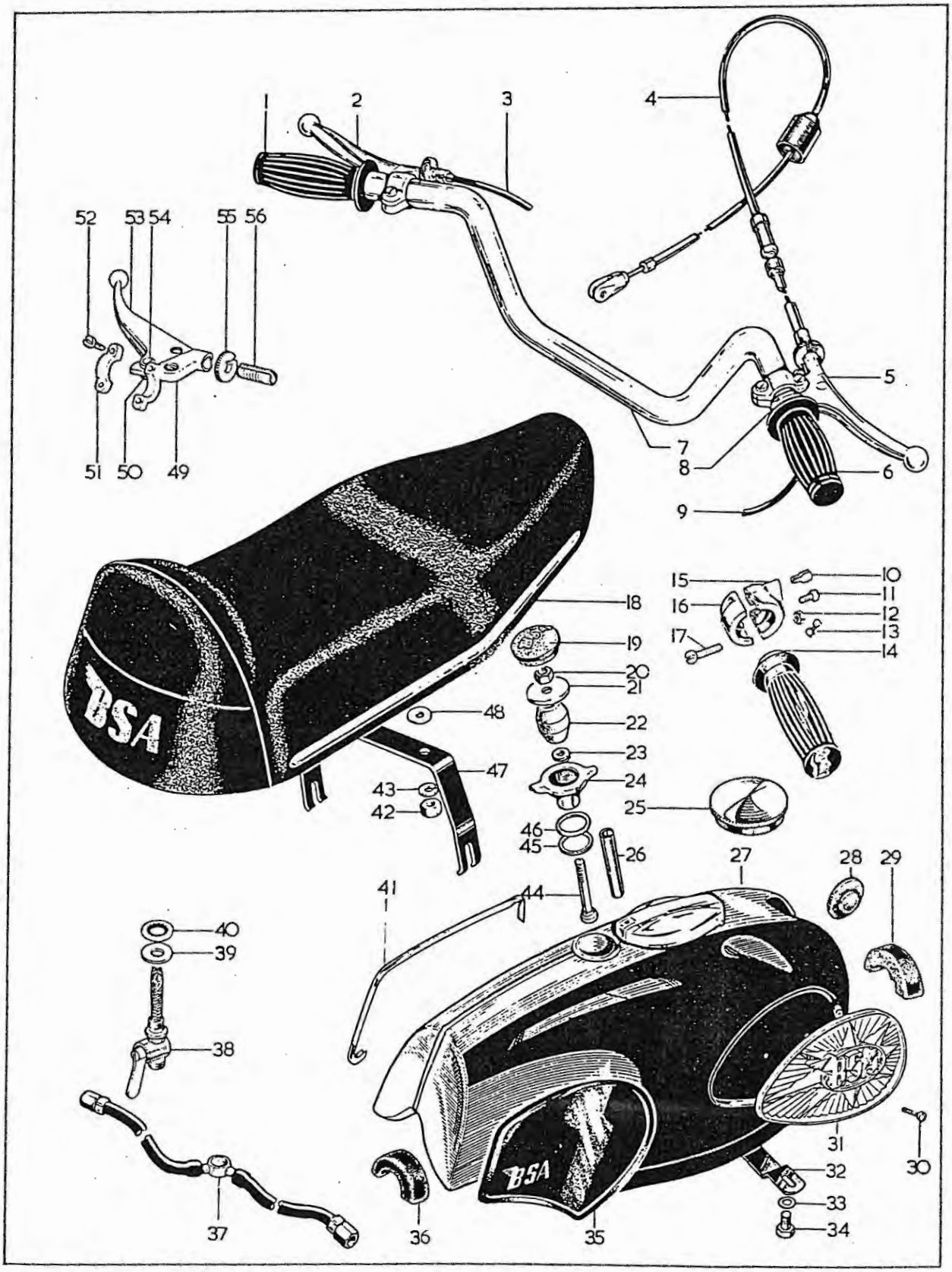

PETROL TANK, TWINSEAT AND CONTROLS

Plate Ref.	*Spares Number* B.S.A. NO.	MAKERS NO.	*Description*	*Per Set*
29.	82–9747		Mounting rubber, front and rear (standard)	2
29.	40–8121		Mounting rubber, front (U.S.A.)	
30.	82–8250		Badge screw ($\frac{1}{8}$" × 40 W.F. × $\frac{5}{8}$")	4
31.	82–9696		Tank badge, right-hand (standard)	
31.	82–9695		Tank badge, left-hand (standard)	
32.	82–9746		Strap assembly (standard)	
32.	41–9071		Strap assembly (U.S.A.)	
33.	02–0923		Washer, strap to tank	2
34.	14–0113		Bolt, strap to tank $\frac{5}{16}$" UN.F. × $\frac{5}{8}$" (standard)	2
34.	75–6594		Nut, strap to tank $\frac{5}{16}$" B.S.C. (U.S.A.)	
35.	82–9723		Knee grip, right-hand (standard)	
35.	82–9722		Knee grip, left-hand (standard)	
36.	68–8018		Mounting rubber-rear (U.S.A.)	
37.	82–9787		Petrol pipe assembly	
38.	82–4971		Petrol tap-short, left-hand	
38.	82–4972		Petrol tap-long, right-hand	
39.	83–0002		Petrol tap washer	2
40.	70–7351		"Stato" seal, petrol tap	2
41.	82–9721		Trim strip-rear (standard)	
42.	02–0051		Nut, twinseat bracket ($\frac{1}{4}$" B.S.C.)	2
43.	82–9020		Spring washer, twinseat bracket	2
44.	82–9784		Bolt, tank mounting $\frac{5}{16}$" B.S.C. × $3\frac{3}{8}$" (standard)	
44.	68–8045		Bolt, tank mounting $\frac{5}{16}$" B.S.C. × $2\frac{7}{8}$" (U.S.A.)	
45.	68–8013		"O"-ring tank mounting (standard)	
46.	68–8019		Mounting ring (standard)	
47.	41–9131		Twinseat bracket	
48.	27–8560		Washer, twinseat bracket	2
49.		19/002	Clutch control bracket	
49.		19/003	Brake control bracket	
50.		18/053	Fulcrum pin nut, clutch and brake controls	2
51.		12/595	Clamp, clutch and brake controls	2
52.		11/014	Clamp screw, clutch and brake controls	4
53.		18/752	Clutch lever only	
53.		18/754	Brake lever only	
54.		18/087	Fulcrum pin, clutch and brake controls	2
55.	60–2072	18/1709	Adjuster nut, clutch and brake controls	2
56.	60–2071	18/1708	Adjuster, clutch and brake controls	2

NOTE:—Where no B.S.A. part number is quoted, the part is only available from the makers.

Plate 14

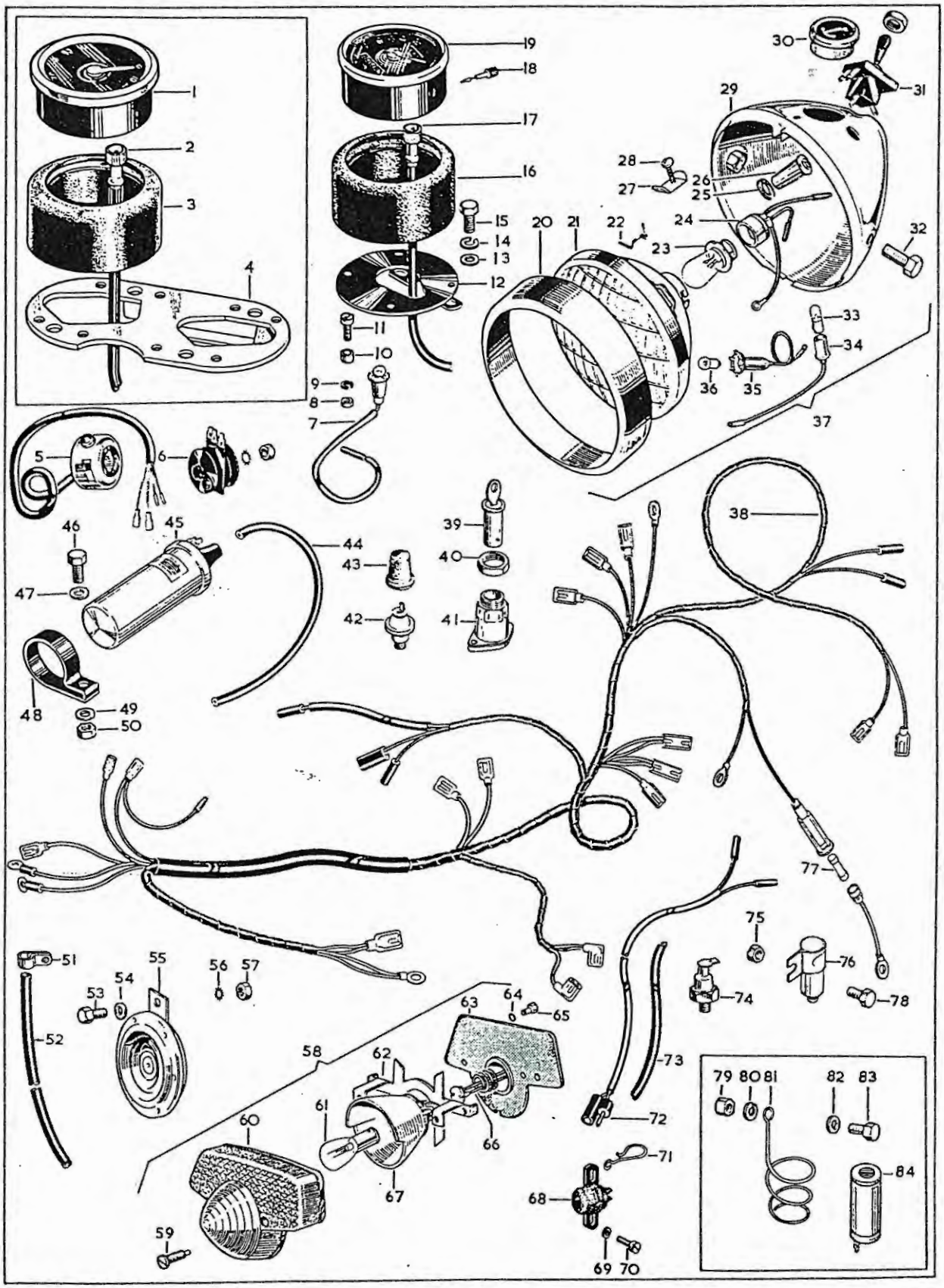
1
2
3
4
5
6
7
8
9
10
11
12
13
14
15
16
17
18
19
20
21
22
23
24
25
26
27
28
29
30
31
32
33
34
35
36
37
38
39
40
41
42
43
44
45
46
47
48
49
50
51
52
53
54
55
56
57
58
59
60
61
62
63
64
65
66
67
68
69
70
71
72
73
74
75
76
77
78
79
80
81
82
83
84

Plate 14

ELECTRICAL EQUIPMENT

Plate Ref.	*Spares Number*		*Description*	*Per Set*
	B.S.A. NO.	MAKERS NO.		
1.	19–8953	RSM.3003/13	Tachometer head	
2.	19–9094		Tachometer cable	
3.	83–0281		Mounting cup, tachometer head	
4.	97–3689		Mounting plate, tachometer and speedometer	
5.	19–0214	Wico 16714	Dipper switch	
6.	19–1715	49072	Rectifier	
7.	19–1166	54953389	Speedometer light lead	
8.	02–0047		Nut, speedometer and tachometer ($\frac{3}{16}$" B.S.C.)	4 *or* 2
9.	24–7068		Spring washer, speedometer and tachometer ($\frac{13}{64}$" × $\frac{21}{64}$" × $\frac{1}{16}$")	4 *or* 2
10.	68–9418		Spacer, speedometer and tachometer	4 *or* 2
11.	76–0543		Screw, speedometer and tachometer (2 B.A. × $\frac{3}{4}$")	4 *or* 2
12.	82–8283		Mounting plate, speedometer only	
13.	02–0525		Washer, plate to fork ($\frac{1}{4}$" × $\frac{1}{2}$" × ·048")	2
14.	24–0978		Spring washer, plate to fork ($\frac{1}{4}$" × $\frac{7}{16}$" × ·040")	2
15.	02–1354		Bolt, plate to fork ($\frac{1}{4}$" B.S.C. × $\frac{41}{64}$")	2
16.	83–0281		Mounting cup, speedometer head	
17.	19–9089	DF.9110/00/63	Speedometer cable	
18.	19–9080	14-148-203-10	Speedometer trip shaft	
19.	19–8951	SSM.5007/02	Speedometer head (m.p.h.)	
19.	19–8952	SSM.5007/03	Speedometer head (k.p.h.)	
20.		553248	Headlamp rim	
21.	19–0958	516798	Light unit (standard)	
21.	19–0959	54522680	Light unit (France and Europe)	
21.	19–1043	553940	Light unit (West Germany and Italy)	
22.		504665	Wire clip, for light unit	6
23.		446	Main bulb (standard)	
23.		410	Main bulb (Europe)	
23.		411	Main bulb (France)	
23.	19–1044	370	Main bulb (West Germany and Italy)	
24.		554602	Main bulb holder	
24.		553738	Adaptor, main bulb (France and Europe)	
25.		54140331	Seal washer, warning light	
26.	19–0965	38189	Warning light (red)	

Plate 14—*continued*

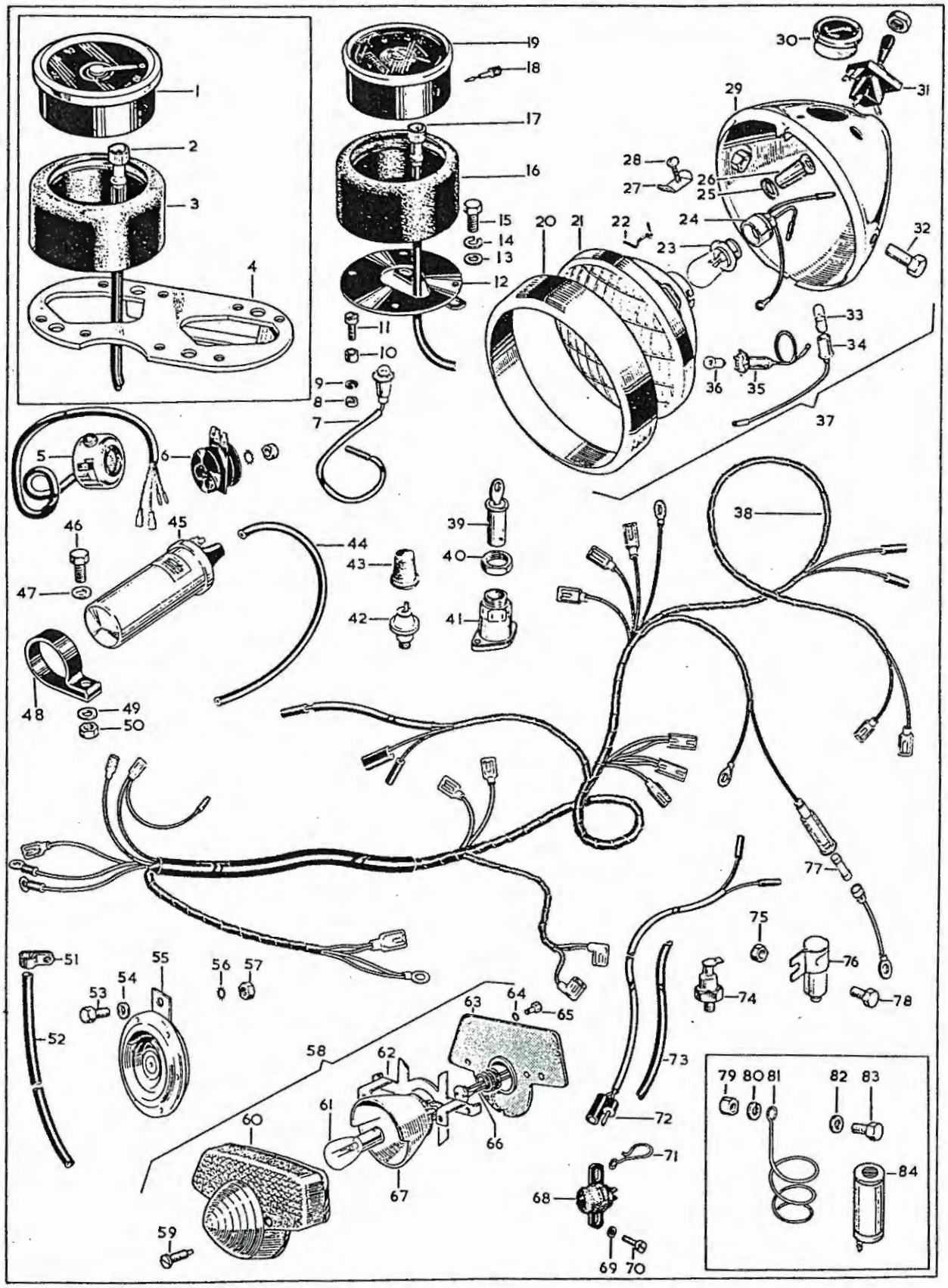

Plate 14—*continued*

ELECTRICAL EQUIPMENT

Plate Ref.	*Spares Number* B.S.A. NO.	MAKERS NO.	*Description*	*Per Set*
26.	19–0982	38191	Warning light (green)	
27.		534296	Plate, headlamp rim	
28.		144921	Screw, headlamp rim	
29.		54523999	Lamp body	
30.	19–0963	36403	Ammeter	
31.	19–0964	35710	Light switch	
32.		112201	Bolt, headlamp mounting	2
33.		281	Bulb, warning light	
34.		54945043	Bulb holder, warning light	
35.		54573590	Bulb holder, pilot light	
36.		989	Pilot bulb	
37.	19–1173	59883	Headlamp complete (standard)	
37.	19–1184†	59885	Headlamp complete (Europe)	
37.	19–1186	59885	Headlamp complete (France)—with 411 main bulb	
38.	19–1316	54957239	Wiring harness	
39.	68–9304		Lock and key for ignition switch	
40.	19–1247	54130041	Nut, ignition switch	
41.	19–1775	31899	Ignition switch	
42.	19–6508	PS.5300/1/07	Oil pressure switch	
43.	60–2045		Oil pressure switch cover	
44.	19–1885	54956469	High-tension lead (standard)	
44.	19–1886	54956427	High tension lead (U.S.A.)	
45.	19–1881	45221	Ignition coil	
46.	14–0204		Bolt, coil clip ($\frac{1}{4}$" B.S.C. × $1\frac{1}{32}$")	
47.	27–8560		Washer, coil clip ($\frac{1}{4}$" × $\frac{5}{8}$" × ·048")	
48.	83–1603		Coil clip	
49.	66–9262		Spacer, coil clip	
50.	14–0801		Nut, coil clip ($\frac{1}{4}$" B.S.C.)	
51.	66–8340		Clip, battery vent pipe	
52.	68–9163		Battery vent pipe	
53.	75–4813*		Bolt, horn to bracket ($\frac{3}{8}$" B.S.C. × $\frac{13}{16}$")	
54.	02–2138		Washer, horn to bracket ($\frac{3}{8}$" × $\frac{3}{4}$" × $\frac{1}{16}$")	
55.	19–2064		Horn (Clearhooter)	
56.	66–4707		Lockwasher, horn to bracket	

Plate 14—*continued*

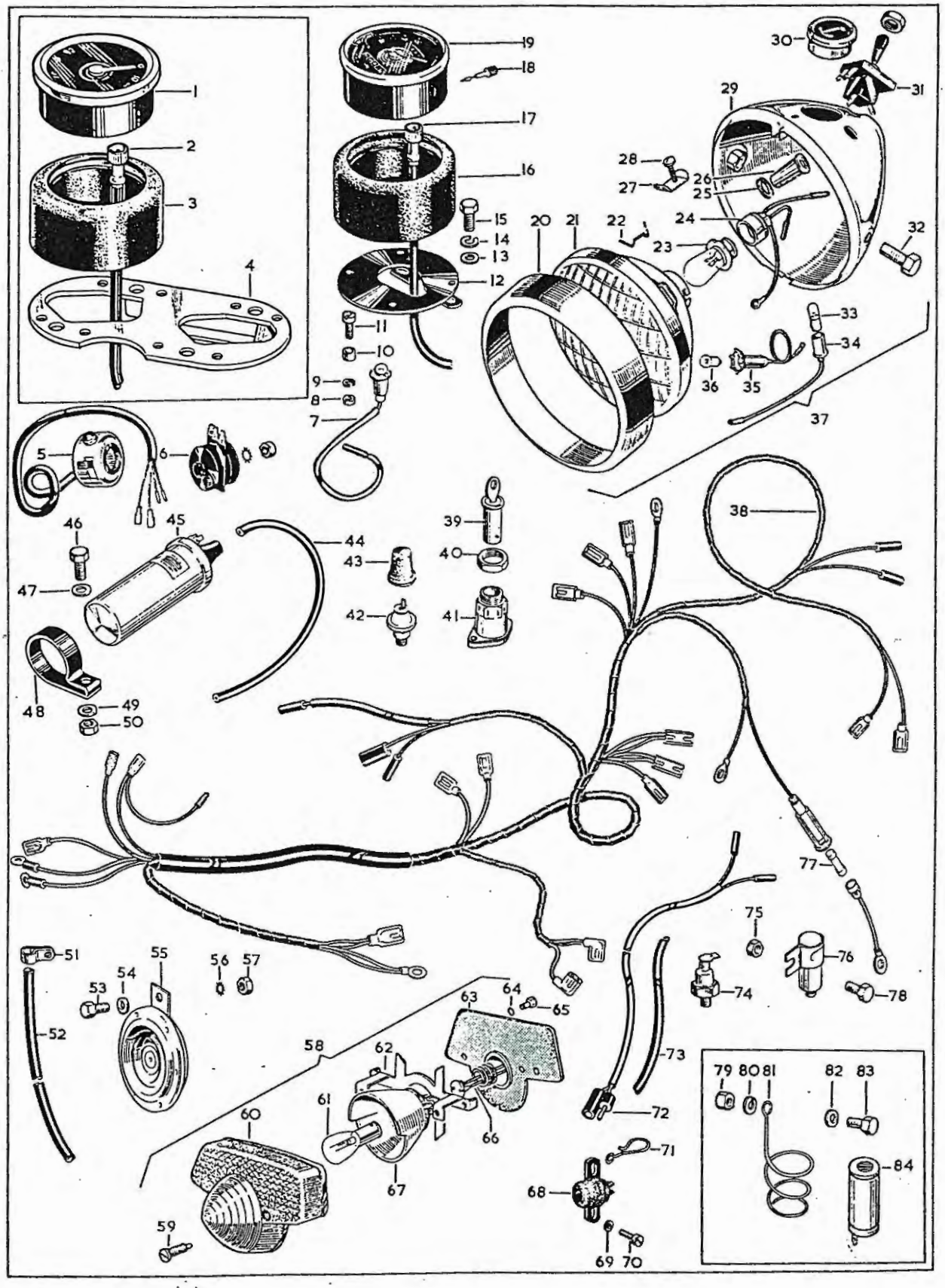

ELECTRICAL EQUIPMENT

Plate Ref.	*Spares Number* B.S.A. NO.	MAKERS NO.	*Description*	*Per Set*
57.	42–4475		Nut, horn to bracket ($\frac{3}{8}$" B.S.C.)	
58.	19–1245	53973	Stop/tail lamp complete	
59.		144921	Screw, lens fixing	2
60.		54577109	Lens, tail lamp	
61.		380	Bulb, tail lamp	
62.		54578212	Base, tail lamp	
63.		54571677	Gasket, tail lamp	
64.		188330	Lockwasher, tail lamp	2
65.		110714	Screw, tail lamp	2
66.		573828	Interior bulb holder, tail lamp	
67.		54578213	Bulb holder assembly	
68.	19–0916	34815	Stop switch, tail lamp	
69.	02–1096		Washer for switch screw ($\frac{3}{16}$" × $\frac{3}{8}$" × ·044")	2
70.	42–4574		Screw, stop lamp switch ($\frac{3}{16}$" B.S.C. × $\frac{1}{2}$")	2
71.	47–9030		Cable clip, stop switch leads	
72.	82–8314	54953386	Tail lamp lead	
73.	82–8307		Tail lamp lead tube	
74.	19–1735	49345	Zener diode	
75.	40–0414		Nut, condenser mounting	
76.	19–1747	54441582	Condenser, contact breaker	
77.	19–1249	188218	Fuse (12 volt, 35 amp.)	
78.	02–0204		Bolt, condenser mounting	
79.	02–2395		Nut, capacitor mounting ($\frac{1}{4}$" B.S.C.)	
80.	82–9020		Spring washer, capacitor mounting ($\frac{1}{4}$" × $\frac{19}{32}$" × ·040")	
81.	82–8320	54483156	Spring, capacitor mounting	
82.	02–0525		Washer, capacitor mounting ($\frac{1}{4}$" × $\frac{1}{2}$" × ·048")	
83.	02–1354		Bolt, capacitor mounting ($\frac{1}{4}$" B.S.C. × $\frac{11}{64}$")	
84.	82–8319	54170009	Capacitor	
	19–1776	54027029	Battery	
	00–5195		Tachometer kit	
	00–4403		Capacitor kit	

*Special material: 53.—EN8R.

†Except West Germany and Italy

NOTE:—Where no B.S.A. part number is quoted, the part is only available from the makers.

Plate 15

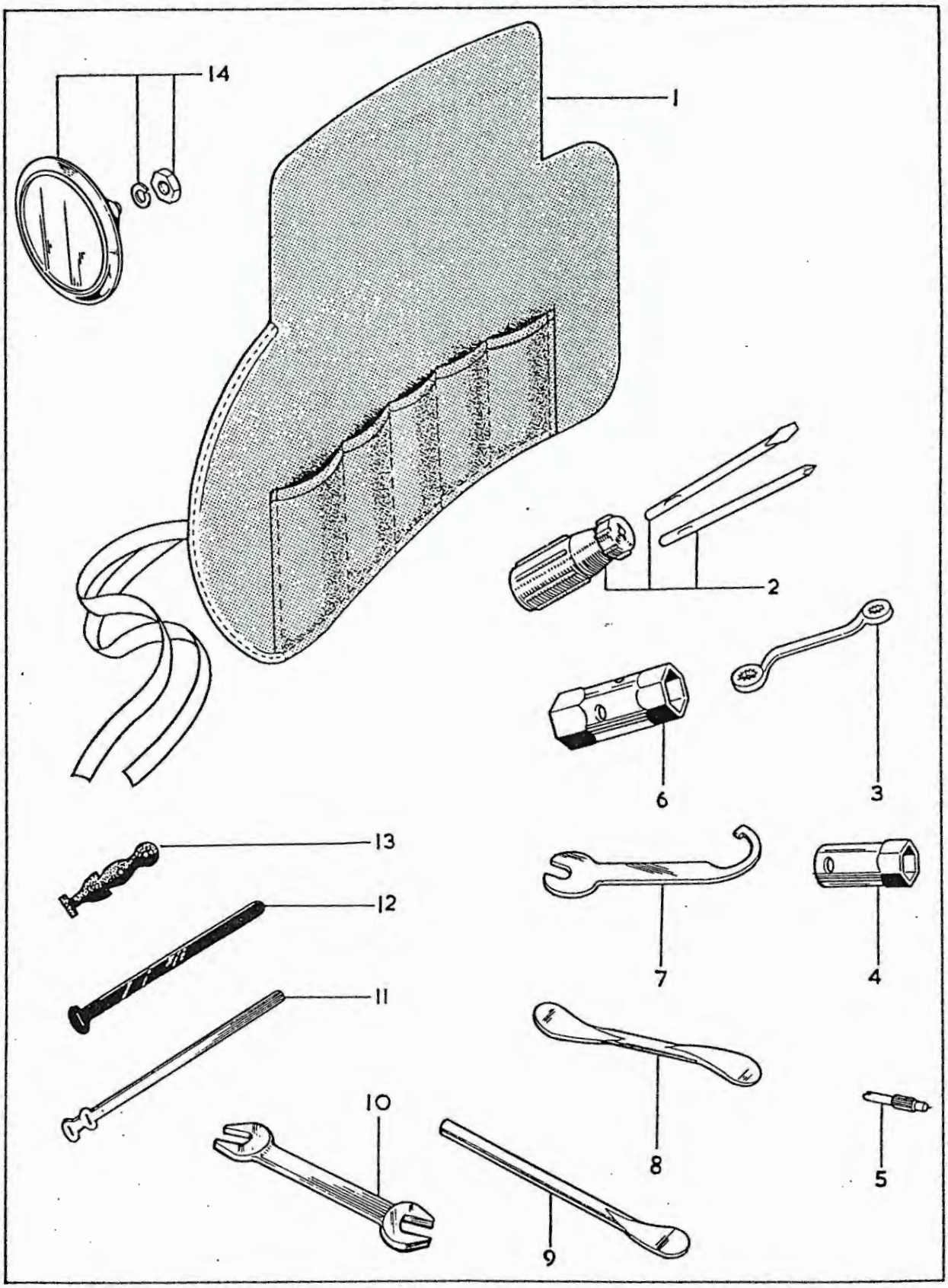

Plate 15

TOOLS

Plate Ref.	*Spares Number*	*Description*	*Per Set*
1.	68–9461	Tool roll	
2.	60–0767	Screwdriver set	
3.	67–9026	Ring Spanner	
4.	68–9464	Plug spanner	
5.	68–9467	Tyre valve key	
6.	40–9017	Box Spanner	
7.	60–2184	Damper unit "C" spanner	
8.	29–9252	Tyre lever	
9.	60–0801	Tyre lever/tommy bar	
10.	60–2084	Double open-ended spanner	
11.	76–9136	Cable clip (alloy)	5
12.	75–9045	Cable clip (alloy)	3
13.	90–9024	Cable clip (short)	2
14.	19–5390	Licence holder	
	60–2113	Toolkit complete	

Plate 16

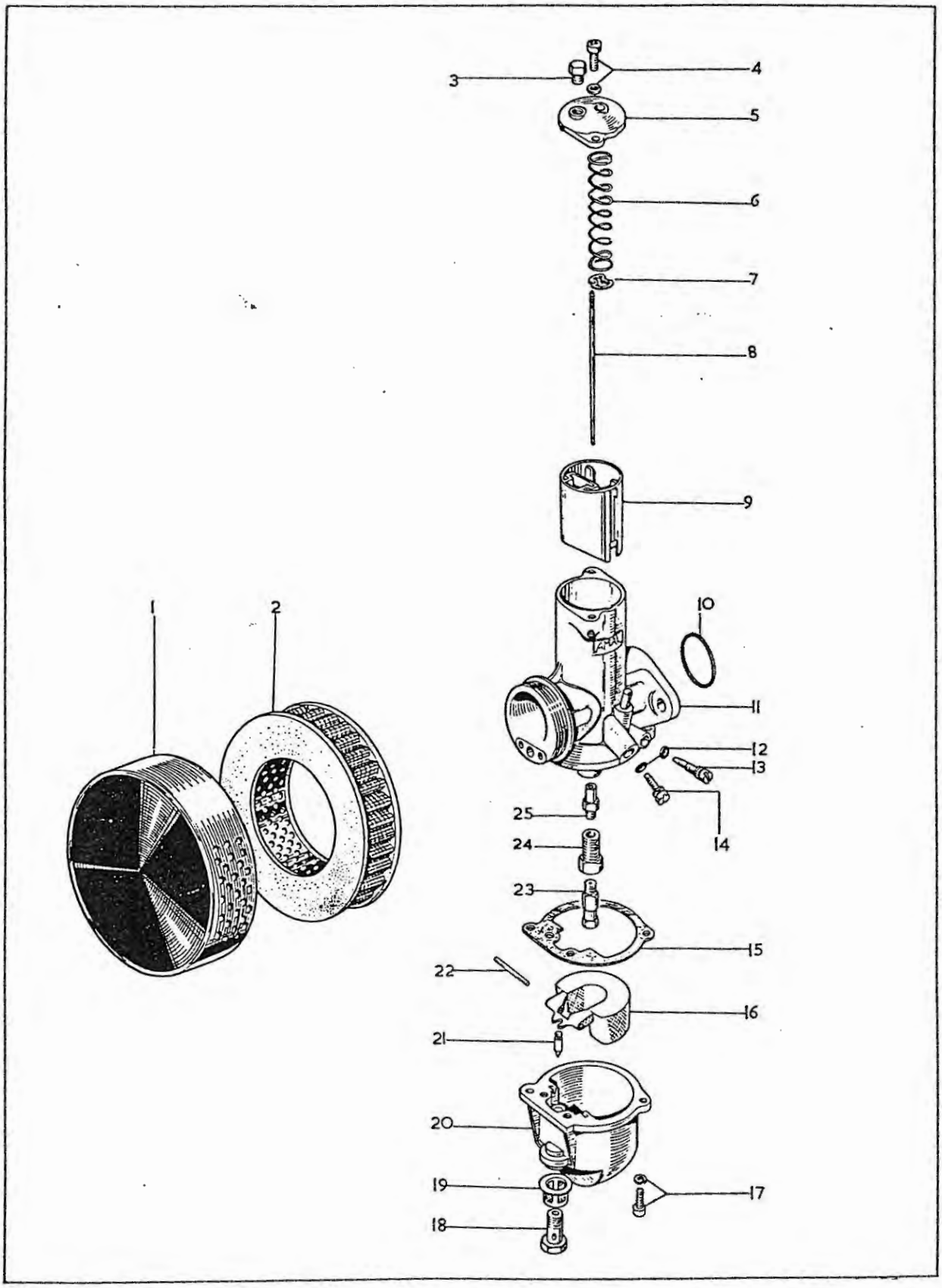

Plate 16

CARBURETTER

Plate Ref.	Spares Number B.S.A. NO.	Spares Number AMAL NO.	Description	Per Set
1.	60–1053		Air cleaner complete (two layer)	
2.	19–7115		Air cleaner element (two-layer)	
3.		4/137A	Plug screw for top cap	
4.	19–3093	622/086	Screw and washer for top cap	2
5.		928/097	Top cap, mixing chamber	
6.	19–3094	622/061	Spring, throttle valve	
7.	19–3095	622/067	Clip, throttle needle	
8.		622/124	Throttle needle	
9.	19–3108	928/060	Throttle valve (3)	
10.	19–3090	622/101	"O" ring, carburetter flange	
11.		R.928	Carburetter body	
12.	19–3098	622/082	"O" ring, pilot air and throttle stop screws	2
13.		622/076	Pilot air screw	
14.		622/077	Throttle stop screw	
15.	19–3106	622/073	Gasket, float chamber	
16.	19–3102	622/069	Float	
17.	19–3093	622/086	Screw and washer for float chamber	2
18.	19–3103	622/078	Banjo bolt, petrol pipe to carburetter	
19.	19–3048	376/093	Filter, petrol pipe	
20.		622/050	Float chamber	
21.	19–3105	622/068	Float needle	
22.		622/071	Float spindle	
23.	19–2877	376/100	Main jet (170 c.c.)	
24.		622/128	Jet holder	
25.		622/122	Needle jet (·106)	
	19–2419	R.928/4	Carburetter complete	

NOTE:—Where no B.S.A. part number is quoted, the part is only available from the makers.

NUMERICAL INDEX

Number	Page	Plate	Code
00–3168	5	—	—
00–3310	5	—	—
00–4403	5	—	—
00–4403	61	—	—
00–5195	5	—	—
00–5195	61	—	—
02–0046	27	5	29
02–0046	35	7	30
02–0046	37	8	2
02–0047	57	14	8
02–0049	51	12	51
02–0049	53	13	20
02–0049	29	5	36
02–0049	41	9	60
02–0051	55	13	42
02–0130	13	2	10
02–0204	49	12	14
02–0204	51	12	39
02–0204	51	12	58
02–0204	61	14	78
02–0204	35	7	34
02–0220	27	5	2
02–0220	31	6	10
02–0440	45	11	2
02–0449	31	6	3
02–0452	45	11	19
02–0522	27	5	28
02–0522	37	8	3
02–0525	57	14	13
02–0525	17	2	71
02–0525	61	14	82
02–0525	9	1	7
02–0525	13	2	4
02–0525	15	2	62
02–0525	19	3	23
02–0525	27	5	3
02–0525	37	8	29
02–0861	31	6	15
02–0923	47	11	31
02–0923	49	12	25
02–0923	51	12	40
02–0923	51	12	55
02–0923	51	12	61
02–0923	53	13	23
02–0923	55	13	53
02–0923	9	1	5
02–0923	17	2	81
02–0923	17	2	86
02–0923	17	2	91
02–0923	41	9	47
02–1027	37	8	34
02–1096	61	14	69
02–1354	57	14	15
02–1354	61	14	83
02–1354	27	5	8
02–1733	31	6	2
02–1925	37	8	36
02–1967	37	8	37
02–2138	59	14	54
02–2138	9	1	10
02–2138	27	5	26
02–2138	27	5	30
02–2138	29	5	38
02–2138	29	5	45
02–2138	31	6	12
02–2138	37	8	15
02–2138	41	9	44
02–2395	49	12	4
02–2395	51	12	36
02–2395	61	14	79
02–2395	25	4	17
02–2395	35	7	31
02–2578	21	3	58
02–2579	21	3	60
02–2580	21	3	59
02–2903	35	7	29
03–0111	37	8	27
03–1346	27	5	16
04–0137	65	16	3
04–2276	37	8	18
11–0013	53	13	17
11–0014	55	13	52
12–0595	55	13	51
14–0113	55	13	34
14–0113	31	6	13
14–0114	49	12	21
14–0115	33	7	25
14–0116	37	8	17
14–0204	59	14	46
14–0208	21	3	50
14–0218	39	9	11
14–0219	33	7	19
14–0219	33	7	21
14–0301	49	12	7
14–0301	49	12	11
14–0302	17	2	66
14–0302	17	2	80
14–0302	17	2	92
14–0302	33	7	28
14–0303	13	2	9
14–0303	37	8	14
14–0303	41	9	45
14–0401	43	10	24
14–0403	9	1	9
14–0403	43	10	20
14–0403	43	10	26
14–0604	49	12	5
14–0702	49	12	23
14–0702	37	8	16
14–0702	37	8	39
14–0801	59	14	50
14–0903	31	6	18
14–1302	33	7	16
14–1401	15	2	53
14–1803	27	5	27
14–1901	13	2	3
14–1901	15	2	45
14–1901	17	2	64
14–1901	17	2	70
14–1902	31	6	16
14–2205	35	7	42
14–2206	35	7	39
14–6102	17	2	101
14–6606	19	3	19
14–6606	21	3	73
14–6608	23	3	98
14–6610	19	3	17
14–6610	19	3	24
14–6610	21	3	72
14–6610	25	4	2
14–6611	21	3	62
14–6611	25	4	7
14–6612	21	3	63
14–6614	21	3	64
15–0039	27	5	15
15–0431	45	11	4
15–0518	49	12	17
15–5155	41	9	35
15–7563	27	5	9
16–0008	53	13	13
16–0009	53	13	11
16–0010	53	13	12
16–0011	53	13	10
16–0091	53	13	14
16–0328	53	13	16
16–0329	53	13	15
16–0364	53	13	8
18–0053	55	13	50
18–0087	55	13	54
18–0752	55	13	53
18–0754	55	13	53
18–1708	55	13	56
18–1709	55	13	55
19–0002	55	13	49
19–0003	55	13	49
19–0214	57	14	5
19–0916	61	14	68
19–0943	51	12	33
19–0952	53	13	2
19–0958	57	14	21
19–0959	57	14	21
19–0963	59	14	30
19–0964	59	14	31
19–0965	57	14	26
19–0982	59	14	26
19–1035	29	5	42
19–1043	57	14	21
19–1044	57	14	23
19–1098	53	13	5
19–1166	57	14	7
19–1173	59	14	37
19–1184	59	14	37
19–1186	59	14	37
19–1245	61	14	58
19–1247	59	14	40
19–1249	61	14	77
19–1262	17	2	99
19–1316	59	14	38
19–1715	57	14	6
19–1735	61	14	74
19–1747	61	14	76
19–1775	59	14	41
19–1776	61	—	—
19–1849	21	3	44
19–1852	21	3	46
19–1853	21	3	43
19–1881	59	14	45
19–1885	59	14	44
19–1886	59	14	44
19–2064	59	14	55
19–2419	6	—	—
19–2419	65	—	—
19–2877	65	16	23
19–3048	65	16	19
19–3090	65	16	10
19–3093	65	16	4
19–3093	65	16	17
19–3094	65	16	6
19–3095	65	16	7
19–3098	65	16	12
19–3102	65	16	16
19–3103	65	16	18
19–3105	65	16	21
19–3106	65	16	15
19–3108	65	16	9
19–5390	63	15	14
19–6508	59	14	42
19–7115	65	16	2
19–7221	53	13	1
19–7222	53	13	6
19–7223	53	13	8
19–7441	31	6	4
19–7452	31	6	5
19–7606	9	1	2
19–7625	9	1	1
19–7717	45	11	10
19–7736	43	10	31
19–8019	17	2	98
19–8613	25	4	27
19–8687	45	11	14
19–8951	57	14	19
19–8952	57	14	19
19–8953	57	14	1

Number	Page	Plate	Code
19-9080	57	14	18
19-9089	57	14	17
19-9094	57	14	2
19-9212	47	11	52
21-0771	35	7	44
21-0785	41	9	55
21-1822	39	9	27
21-1857	17	2	63
21-1872	13	2	20
21-1889	17	2	90
21-1890	17	2	75
21-1891	17	2	65
21-1892	17	2	87
21-1893	15	2	44
21-1894	17	2	95
21-1895	13	2	6
21-1896	17	2	94
21-1898	19	3	25
21-1908	33	7	24
21-1934	27	5	25
21-1943	25	4	20
21-1951	25	4	9
21-1985	17	2	73
21-1995	43	10	22
21-1998	43	10	15
21-2002	25	4	24
21-5161	51	12	48
24-0036	13	2	16
24-0649	35	7	35
24-0724	11	1	46
24-0732	9	1	40
24-0978	57	14	14
24-5160	9	1	22
24-6040	9	1	4
24-7000	45	11	28
24-7068	57	14	9
24-8784	45	11	20
24-8784	51	12	53
24-8784	33	7	27
27-5135	41	9	37
27-5676	37	8	12
27-6037	49	12	19
27-6742	51	12	56
27-6810	47	11	40
27-8560	49	12	9
27-8560	51	12	59
27-8560	55	13	48
27-8560	59	14	47
28-2080	45	11	7
28-2080	37	8	31
28-2338	51	12	34
28-2338	51	12	62
29-0541	49	12	10
29-0541	15	2	36
29-0541	37	8	33
29-2053	13	2	1
29-2054	13	2	2
29-2089	11	1	64
29-3319	21	3	53
29-3857	23	3	89
29-5293	37	8	8
29-5293	37	8	22
29-7962	33	7	15
29-7971	35	7	46
29-9252	63	15	8
29-9388	41	9	48
30-0196	37	8	28
30-0733	29	5	51
30-0733	29	5	53
30-0733	29	5	61
35-6436	45	11	25
36-0382	17	2	67
36-0382	29	5	35
36-0382	41	9	49
37-1197	43	10	34
37-1198	43	10	34
37-1373	43	10	37
37-1481	43	10	2
37-1798	15	2	34
37-2001	43	10	9
37-2005	43	10	23
37-2026	43	10	12
37-2026	43	10	30
37-2027	43	10	19
37-2027	43	10	27
37-2130	43	10	13
37-2133	43	10	38
37-2134	43	10	35
37-2135	43	10	36
37-2136	43	10	33
37-2226	45	11	11
37-3337	43	10	6
37-3443	43	10	3
37-3444	43	10	16
37-3446	43	10	10
37-3450	43	10	28
37-3453	43	10	18
37-3454	43	10	29
37-3455	43	—	—
37-3463	5	—	—
37-3463	43	—	—
37-3466	5	—	—
37-3466	43	10	4
37-3469	47	11	43
37-3522	43	10	17
37-3582	43	10	5
40-0020	9	1	24
40-0025	13	2	8
40-0028	19	3	15
40-0064	9	1	39
40-0065	9	1	3
40-0066	9	1	39
40-0069	9	1	39
40-0118	15	2	31
40-0127	11	1	78
40-0157	9	1	13
40-0158	9	1	15
40-0209	9	1	6
40-0210	13	2	7
40-0222	19	3	14
40-0236	21	3	61
40-0241	17	2	77
40-0242	13	2	23
40-0243	17	2	76
40-0246	17	2	78
40-0325	17	2	93
40-0326	17	2	93
40-0327	17	2	93
40-0375	17	2	72
40-0381	19	3	21
40-0394	13	2	22
40-0414	51	12	50
40-0414	61	14	75
40-0414	15	2	35
40-0414	27	5	5
40-0414	27	5	10
40-0414	31	6	11
40-0455	15	2	33
40-0679	19	3	18
40-0682	21	3	47
40-0683	21	3	48
40-0705	13	2	5
40-0723	21	3	45
40-0862	19	3	11
40-0865	17	2	84
40-0892	11	1	43
40-0907	11	1	49
40-0913	11	1	51
40-0915	9	1	36
40-0917	11	1	49
40-0918	11	1	49
40-0919	11	1	49
40-0929	11	1	59
40-0931	11	1	69
40-0932	9	1	11
40-0933	11	1	58
40-0939	11	1	75
40-0942	11	1	77
40-0946	29	5	34
40-0965	9	1	18
40-0966	9	1	19
40-0967	9	1	17
40-0968	11	1	72
40-0969	11	1	73
40-0970	6	—	—
40-0970	9	1	33
40-0972	6	—	—
40-0974	6	—	—
40-0977	19	3	12
40-0978	9	1	34
40-0979	9	1	35
40-0993	11	1	62
40-1005	25	4	6
40-1007	11	1	69
40-1009	11	1	68
40-1010	13	2	11
40-1016	15	2	41
40-1018	11	1	66
40-1021	13	2	11
40-1030	11	1	45
40-1031	9	1	41
40-1033	17	2	89
40-1035	17	2	68
40-1037	11	1	54
40-2710	9	1	26
40-2711	9	1	28
40-2712	9	1	27
40-2844	35	7	33
40-3007	23	3	96
40-3019	23	3	93
40-3020	23	3	91
40-3032	23	3	100
40-3033	23	3	99
40-3042	23	3	111
40-3043	23	3	112
40-3044	23	3	109
40-3045	23	3	110
40-3051	19	3	2
40-3059	19	3	8
40-3061	19	3	5
40-3073	21	3	55
40-3084	21	3	69
40-3085	21	3	70
40-3119	23	3	93
40-3120	23	3	93
40-3121	19	3	3
40-3126	23	3	91
40-3127	23	3	91
40-3150	25	4	31
40-3155	23	3	107
40-3193	23	3	108
40-3194	23	3	106
40-3201	25	4	30
40-3206	25	4	28
40-3207	25	4	33
40-3210	25	4	36
40-3219	25	4	22
40-3220	25	4	12
40-3221	25	4	15
40-3227	25	4	16
40-3230	25	4	18

Number	Page	Plate	Code
40–3231	25	4	21
40–3233	25	4	13
40–3234	25	4	14
40–3254	23	3	97
40–3257	19	3	30
40–3258	23	3	79
40–3262	23	3	80
40–3265	23	3	114
40–3271	19	3	33
40–3272	19	3	32
40–3273	19	3	31
40–3275	21	3	76
40–3276	19	3	39
40–3277	21	3	40
40–3279	19	3	34
40–3282	19	3	28
40–3283	21	3	42
40–3291	23	3	101
40–3292	21	3	78
40–3292	23	3	86
40–3321	19	3	7
40–3323	23	3	105
40–3330	25	4	37
40–4077	27	5	32
40–4081	27	5	31
40–4241	31	6	8
40–4524	29	5	50
40–4524	29	5	58
40–4530	29	5	60
40–4733	31	6	19
40–4734	31	6	20
40–4735	31	6	21
40–4820	37	8	23
40–4960	53	13	7
40–5018	41	9	51
40–5069	41	9	33
40–5090	41	9	56
40–5143	41	9	40
40–5144	41	9	42
40–5145	41	9	39
40–6030	37	8	26
40–6033	47	11	29
40–6040	47	11	30
40–6078	5	—	—
40–6078	47	—	—
40–6080	47	11	44
40–6790	51	12	37
40–6910	31	6	1
40–8046	27	5	1
40–8046	27	5	6
40–8121	55	13	29
40–8382	33	7	11
40–8401	35	7	45
40–8435	33	7	7
40–8436	33	7	6
40–8657	53	13	9
40–9017	63	15	6
40–9134	41	9	46
40–9172	27	5	4
40–9187	27	5	7
40–9188	27	5	13
40–9190	17	2	82
41–0143	17	2	96
41–0146	17	2	97
41–0560	9	1	37
41–0565	15	2	56
41–0567	15	2	55
41–0569	15	2	32
41–0603	15	2	37
41–0605	15	2	49
41–0609	15	2	47
41–0624	15	2	57
41–0673	11	1	47
41–0706	15	2	51
41–0715	19	3	13
41–0804	15	2	42
41–3045	23	3	115
41–3054	23	3	88
41–3063	23	3	94
41–3068	23	3	84
41–3070	23	3	87
41–3072	23	3	85
41–3074	23	3	85
41–3078	23	3	83
41–3089	23	3	95
41–3095	19	3	4
41–3209	25	4	35
41–3210	25	4	34
41–3212	25	4	26
41–4043	53	13	26
41–4105	31	6	17
41–4105	37	8	4
41–4105	37	8	14
41–4835	37	8	24
41–4863	37	8	13
41–6016	47	11	37
41–6016	47	11	46
41–6019	47	11	50
41–6021	47	11	49
41–6022	45	11	24
41–6022	5	—	—
41–6032	47	11	35
41–6082	47	11	54
41–6090	45	11	15
41–6091	45	11	13
41–6093	45	11	8
41–6094	45	11	26
41–6098	47	11	53
41–6782	49	12	29
41–7007	37	8	38
41–7037	37	8	25
41–8011	53	13	26
41–9071	55	13	32
41–9131	55	13	47
41–9152	51	12	57
42–3249	49	12	15
42–3249	51	12	44
42–3249	33	7	5
42–4343	27	5	24
42–4364	27	5	23
42–4475	61	14	57
42–4475	27	5	33
42–4475	29	5	39
42–4475	29	5	46
42–4475	29	5	52
42–4476	47	11	32
42–4476	51	12	41
42–4476	11	1	53
42–4476	29	5	56
42–4476	37	8	10
42–4476	37	8	19
42–4574	61	14	70
42–4926	37	8	7
42–5819	43	10	1
42–5819	43	10	7
42–5820	43	10	39
42–5836	43	10	25
42–5840	43	10	32
42–5841	43	10	11
42–6011	47	11	41
42–6012	47	11	42
42–6019	45	11	16
42–6045	45	11	5
42–6335	43	10	8
42–6554	21	3	57
42–6558	49	12	2
42–8010	53	13	19
42–8017	53	13	22
42–8052	53	13	28
47–3214	25	4	32
47–4214	27	5	19
47–5064	41	9	58
47–5065	41	9	57
47–7003	37	8	40
47–7013	37	8	35
47–9012	27	5	20
47–9030	61	14	71
53–3049	23	3	103
54–0042	41	9	32
54–0055	49	12	22
54–0170	51	12	49
54–5504	39	9	26
54–8003	33	7	23
54–8003	39	9	10
54–9012	51	12	54
54–9081	51	12	43
57–0280	43	10	40
57–0948	17	2	88
57–2166	25	4	1
57–2641	21	3	65
57–2642	21	3	75
57–2646	21	3	67
57–2750	21	3	41
57–2759	21	3	66
57–2764	21	3	68
57–3638	51	12	45
57–3763	19	3	6
57–2764	19	3	38
57–3850	23	3	102
57–3854	23	3	113
57–3872	23	3	90
57–3874	23	3	81
57–3876	23	3	92
57–3877	23	3	82
57–3951	25	4	19
57–4016	5	—	—
57–4016	25	—	—
57–4019	25	4	11
57–4070	21	3	77
60–0767	63	15	2
60–0801	63	15	9
60–1053	65	16	1
60–2034	53	13	4
60–2045	59	14	43
60–2053	53	13	4
60–2071	55	13	56
60–2072	55	13	55
60–2082	53	13	3
60–2083	53	13	3
60–2084	63	15	10
60–2113	63	—	—
60–2184	63	15	7
60–2338	35	7	43
60–2376	35	7	48
60–2376	35	7	47
60–2377	35	7	47
60–2378	35	7	48
60–2442	53	13	2
60–2443	53	13	5
60–2683	37	8	30
60–2683	43	10	21
60–2722	27	5	14
60–2724	23	3	104
62–0263	11	1	63
64–6016	41	9	54
65–1232	11	1	56
65–2593	19	3	27
65–4917	37	8	6
65–4917	37	8	23
65–5111	45	11	27
65–5332	39	9	5

NUMERICAL INDEX—*continued*

Number	Page	Plate	Code
65–5333	41	9	36
65–5883	45	11	12
65–5884	47	11	38
65–5886	47	11	48
65–5887	47	11	47
65–5904	45	11	23
65–5940	45	11	9
65–6274	37	8	43
65–8326	29	5	62
66–0102	9	1	3
66–3074	11	1	76
66–3074	15	2	59
66–3074	19	3	37
66–3074	25	4	10
66–4149	29	5	47
66–4707	59	14	56
66–4707	29	5	44
66–4708	45	11	3
66–7518	17	2	100
66–8340	59	14	51
66–9262	59	14	49
67–0042	33	7	10
67–1171	31	6	14
67–1236	17	2	83
67–1286	15	2	60
67–1288	15	2	54
67–1391	15	2	48
67–6027	47	11	45
67–6033	47	11	33
67–6034	47	11	34
67–6038	45	11	17
67–6051	47	11	39
67–6839	51	12	47
67–8313	49	12	26
67–9026	63	15	3
68–0018	11	1	57
68–0289	19	3	9
68–0331	21	3	49
68–0331	35	7	40
68–0383	17	2	74
68–0661	11	1	60
68–0839	25	4	4
68–0840	25	4	5
68–0938	15	2	46
68–3168	15	2	61
68–4081	37	8	11
68–4577	29	5	49
68–4597	29	5	59
68–4708	27	5	21
68–4835	37	8	21
68–4925	27	5	30
68–4968	53	13	7
68–5056	41	9	34
68–5104	39	9	2
68–5108	39	9	1
68–5137	41	9	53
68–6066	45	11	1
68–6081	47	11	36
68–6095	45	11	21
68–6133	45	11	22
68–6134	45	11	6
68–6135	45	11	18
68–6142	47	11	51
68–6802	49	12	28
68–6834	51	12	52
68–6835	51	12	60
68–8013	55	13	45
68–8014	53	13	20
68–8016	53	13	21
68–8018	55	13	36
68–8019	55	13	46
68–8045	55	13	44
68–8343	33	7	8
68–8382	33	7	13
68–8383	33	7	12
68–9115	27	5	12
68–9163	59	14	52
68–9223	33	7	1
68–9226	33	7	2
68–9227	33	7	2
68–9287	33	7	1
68–9304	59	14	39
68–9337	27	5	11
68–9418	57	14	10
68–9428	41	9	59
68–9429	41	9	50
68–9461	63	15	1
68–9464	63	15	4
68–9467	63	15	5
70–2980	51	12	42
70–3789	17	2	79
70–5874	33	7	20
70–6026	23	3	116
70–6838	6	—	—
70–6838	9	1	31
70–6839	6	—	—
70–6839	9	1	32
70–7351	55	13	40
70–7354	21	3	54
70–7728	9	1	29
70–7739	13	2	26
70–7777	9	1	12
70–7787	9	1	16
70–7790	9	1	20
70–7791	9	1	14
70–7820	11	1	55
70–7856	25	4	29
70–7858	11	1	74
70–7882	21	3	51
70–7911	9	1	8
70–7996	9	1	21
70–8259	17	2	69
70–8276	6	—	—
70–8276	9	1	30
70–8277	6	—	—
70–8278	6	—	—
70–8315	13	2	29
70–8737	21	3	52
70–8782	25	4	25
70–8836	11	1	50
70–8896	13	2	21
70–9017	6	—	—
70–9018	6	—	—
70–9021	6	—	—
70–9022	6	—	—
70–9263	11	1	52
70–9381	13	2	13
70–9382	13	2	12
70–9383	13	2	18
70–9384	13	2	24
70–9428	13	2	12
70–9429	13	2	19
70–9430	13	2	14
70–9431	13	2	17
70–9432	13	2	25
70–9433	21	3	74
70–9517	13	2	15
70–9526	19	3	26
70–9652	35	7	36
70–9724	9	1	25
70–9737	13	2	28
70–9800	25	4	1
70–9848	5	—	—
70–9848	9	1	38
70–9906	11	1	48
70–9907	11	1	42
70–9979	15	2	58
71–1003	11	1	44
71–1058	25	4	8
71–1059	19	3	16
71–1065	25	4	23
71–1087	5	—	—
71–1119	5	—	—
71–1119	17	2	85
71–1133	5	—	—
71–1136	15	2	43
71–1139	15	2	38
71–1142	15	2	39
71–1143	15	2	50
71–1147	15	2	40
71–1148	15	2	52
71–1155	13	2	27
71–1165	11	1	70
71–1166	11	1	71
71–1178	9	1	25
71–1181	35	7	36
71–1182	33	7	26
71–1184	33	7	18
71–1221	35	7	41
71–1223	35	7	37
71–1276	13	2	30
75–0257	19	3	10
75–2719	33	7	17
75–2719	33	7	22
75–2725	33	7	20
75–3144	41	9	61
75–4813	59	14	53
75–4813	29	5	37
75–4813	29	5	43
75–5088	39	9	17
75–5095	39	9	30
75–5099	39	9	14
75–5104	39	9	20
75–5105	39	9	18
75–5199	39	9	16
75–6594	49	12	18
75–6594	49	12	20
75–6594	49	12	24
75–6594	49	12	30
75–6594	55	13	34
75–8009	53	13	25
75–9045	63	15	12
76–0012	9	1	23
76–0012	53	13	23
76–0271	19	3	29
76–0308	11	1	65
76–0378	11	1	61
76–0528	19	3	35
76–0543	57	14	11
76–4116	25	4	3
76–9136	63	15	11
76–9325	41	9	52
82–2351	43	10	14
82–4971	55	13	38
82–4972	55	13	38
82–8140	49	12	32
82–8195	51	12	46
82–8250	55	13	30
82–8283	57	14	12
82–8285	29	5	55
82–8307	61	14	73
82–8314	61	14	72
82–8319	61	14	84
82–8320	61	14	81
82–8392	49	12	16
82–8393	49	12	13
82–8507	37	8	23
82–8614	33	7	3
82–8686	27	5	22
82–8874	33	7	14
82–8933	31	6	6
82–9004	29	5	48
82–9008	53	13	21

Number	Page	Plate	Code
82–9008	29	5	57
82–9020	49	12	3
82–9020	49	12	6
82–9020	51	12	38
82–9020	55	13	43
82–9020	61	14	80
82–9020	35	7	32
82–9124	27	5	17
82–9125	27	5	18
82–9210	31	6	7
82–9213	5	—	—
82–9213	29	5	41
82–9602	37	8	9
82–9603	37	8	20
82–9608	37	8	9
82–9695	55	13	31
82–9696	55	13	31
82–9721	55	13	41
82–9722	55	13	35
82–9723	55	13	35
82–9729	53	13	27
82–9730	53	13	28
82–9732	53	13	18
82–9746	55	13	32
82–9747	55	13	29
82–9782	53	13	24
82–9784	55	13	44
82–9787	55	13	37
82–9801	53	13	27
82–9943	37	8	24
82–9950	31	6	9
82–9958	37	8	41
82–9988	51	12	35
82–9989	51	12	35
83–0002	55	13	39
83–0256	37	8	13
83–0270	49	12	31
83–0281	57	14	3
83–0281	57	14	16
83–1426	37	8	1
83–1428	37	8	5
83–1460	37	8	32
83–1513	29	5	40
83–1559	49	12	8
83–1603	59	14	48
83–1604	31	6	22
83–1607	5	—	—
83–1607	29	5	41
83–1648	33	7	4
83–1651	33	7	9
89–3208	21	3	56
90–0011	19	3	36
90–4294	29	5	54
90–5268	19	3	22
90–6074	19	3	1
90–6576	49	12	1
90–6579	49	12	12
90–6580	49	12	12
90–7029	37	8	42
90–9024	63	15	13
97–0519	39	9	31
97–1656	39	9	13
97–2090	39	9	24
97–2091	39	9	22
97–2126	39	9	29
97–2127	39	9	23
97–2154	39	9	21
97–2245	39	9	4
97–2513	39	9	6
97–2525	41	9	38
97–2526	41	9	43
97–2704	19	3	20
97–2704	21	3	71
97–2704	41	9	41
97–3638	39	9	12
97–3639	39	9	15
97–3669	39	9	25
97–3672	39	9	19
97–3678	39	9	7
97–3680	39	9	25
97–3685	49	12	27
97–3689	57	14	4
97–3693	39	9	3
97–3694	39	9	3
97–3895	5	—	—
97–3895	41	—	—
97–3906	39	9	8
97–3921	39	9	9
97–3922	39	9	28
281	59	14	33
370	57	14	23
380	61	14	61
410	57	14	23
411	57	14	23
446	57	14	23
989	59	14	36
16714	57	14	5
31899	59	14	41
34815	61	14	68
35710	59	14	31
36403	59	14	30
38189	57	14	26
38191	59	14	26
45221	59	14	45
49072	57	14	6
49345	61	14	74
53973	61	14	58
59883	59	14	37
59885	59	14	37
14-148-203-10	57	14	18
DF9110/00/63	57	14	17
RSM3003/01	57	14	1
SSM5001/03	57	14	19
SSM5001/04	57	14	19
PS5300/1/07	59	14	42
110714	61	14	65
112201	59	14	32
144921	59	14	28
144921	61	14	59
188218	61	14	77
188330	61	14	64
504665	57	14	22
516798	57	14	21
534296	59	14	27
553248	57	14	20
553738	57	14	24
553940	57	14	21
554602	57	14	24
573828	61	14	66
54027029	61	—	—
54130041	59	14	40
54140331	57	14	25
54170009	61	14	84
54441582	61	14	76
54483156	61	14	81
54522680	57	14	21
54523999	59	14	29
54571677	61	14	63
54573590	59	14	35
54577109	61	14	60
54578212	61	14	62
54578213	61	14	67
54945043	59	14	34
54953386	61	14	72
54953389	57	14	7
54956427	59	14	44
54956469	59	14	44
54957239	59	14	38
376/093	65	16	19
376/100	65	16	23
622/050	65	16	20
622/061	65	16	6
622/067	65	16	7
622/068	65	16	21
622/069	65	16	16
622/071	65	16	22
622/073	65	16	15
622/076	65	16	13
622/077	65	16	14
622/078	65	16	18
622/082	65	16	12
622/086	65	16	4
622/086	65	16	17
622/101	65	16	10
622/122	65	16	25
622/124	65	16	8
622/128	65	16	24
928/060	65	16	9
928/097	65	16	5
R928	65	16	11
R928/4	65	—	—

British Only

MOTORCYLES AND PARTS INC.

32451 PARKLANE ST.
GARDEN CITY, MI 48135 USA

WWW.BRITISHONLY.COM
INFO@BRITISHONLY.COM

RETAIL: 1-800-278-6659 ***WHOLESALE: 1-800-852-9253*** ***FAX: 1-734-422-9253***

WORLDS LARGEST SELECTION OF FACTORY ORIGINAL NEW AND USED PARTS

45,000 SQ. FT. OF MOTORCYLE PARTS & ACCESSORIES FROM 1911 TO 1984 FOR ALL BRITISH MAKES!
CASH FOR ALL BRITISH BIKES, PARTS AND LITERATURE

SPECIALIZING IN
VINTAGE MOTORCYLCE PARTS

TRIUMPH
Norton
BSA

THE BIGGEST!

ENGINE REBUILDING PARTS
GASKET - SEALS - BEARINGS
BUSHINGS - PISTONS - RINGS
CLUTCHES - TUNE UP PARTS
SPEED EQUIPMENT

THE BEST!

STOCK AND CUSTOM PARTS
SEATS - HANDLEBARS - CHAINS
TIRES - TUBES - EXHAUST PIPES
MUFFLERS - GAS TANKS - FENDERS
RESTORATION PARTS

THE ONLY!

Central Wheel Components · Barnett Clutches & Cables · Classic Transfers Robert Derrick Ltd · Renold · Lucas · Amal · Emgo Your Powersport Supplier · Brituro England · JP Pistons · Hastings · UH

VELOCETTE • ANDOVER NORTON • TEC • HAYNES • P&P SEATING • WASSELL • MORGO
ALPHA BEARINGS • M.A.C. PRODUCTS • JOE HUNT MAGNETOS • J.J. CABLES • BUCHANAN'S
L.A. SLEEVE • MEGACYCLE CAMS • T.J. WASSELL LIMITED • SUDCO INTERNATIONAL
ACE CLASSICS LONDON • CLASSIC GASKETS • BRITISH WIRING • PBM ENGINEERING
TRI-COR ENGLAND • LEAK PROOF SEALS • MCA (ASTON) LIMITED • GARDNER - WESTCOTT

WE ACCEPT VISA - MASTERCARD - DISCOVER - AMERICAN EXPRESS

PARTS SHIPPED WORDLWIDE !!! VISA · MasterCard · Discover · American Express

VISIT OUR EBAY STORE
http://stores.ebay.com/British-Only-Motorcycles-And-Parts

British Only

MOTORCYLES AND PARTS INC.

32451 PARKLANE ST.
GARDEN CITY, MI 48135 USA

WWW.BRITISHONLY.COM
INFO@BRITISHONLY.COM

RETAIL: 1-800-278-6659 ***WHOLESALE: 1-800-852-9253*** ***FAX: 1-734-422-9253***

WORLDS LARGEST SELECTION OF FACTORY ORIGINAL NEW AND USED PARTS

45,000 SQ. FT. OF MOTORCYLE PARTS & ACCESSORIES FROM 1911 TO 1984 FOR ALL BRITISH MAKES!
CASH FOR ALL BRITISH BIKES, PARTS AND LITERATURE

SPECIALIZING IN
VINTAGE MOTORCYLCE PARTS

TRIUMPH
Norton
BSA

THE BIGGEST!

ENGINE REBUILDING PARTS
GASKET - SEALS - BEARINGS
BUSHINGS - PISTONS - RINGS
CLUTCHES - TUNE UP PARTS
SPEED EQUIPMENT

THE BEST!

STOCK AND CUSTOM PARTS
SEATS - HANDLEBARS - CHAINS
TIRES - TUBES - EXHAUST PIPES
MUFFLERS - GAS TANKS - FENDERS
RESTORATION PARTS

THE ONLY!

Central Wheel Components · Barnett Clutches & Cables · Classic Transfers Robert Derrick Ltd · Renold · Lucas · Amal · Emgo Your Powersport Supplier · Brituro England · JP Pistons · Hastings · UH

VELOCETTE • ANDOVER NORTON • TEC • HAYNES • P&P SEATING • WASSELL • MORGO
ALPHA BEARINGS • M.A.C. PRODUCTS • JOE HUNT MAGNETOS • J.J. CABLES • BUCHANAN'S
L.A. SLEEVE • MEGACYCLE CAMS • T.J. WASSELL LIMITED • SUDCO INTERNATIONAL
ACE CLASSICS LONDON • CLASSIC GASKETS • BRITISH WIRING • PBM ENGINEERING
TRI-COR ENGLAND • LEAK PROOF SEALS • MCA (ASTON) LIMITED • GARDNER - WESTCOTT

WE ACCEPT VISA - MASTERCARD - DISCOVER - AMERICAN EXPRESS

PARTS SHIPPED WORDLWIDE !!! VISA · MasterCard · Discover · American Express

VISIT OUR EBAY STORE
http://stores.ebay.com/British-Only-Motorcycles-And-Parts

British Only

MOTORCYCLES AND PARTS INC.
32451 PARKLANE ST
GARDEN CITY, MI 48135 USA
PHONE: **800-278-6659**
FAX: **734-422-9253**

Year:	Make:	Model:
Engine #		
Frame #		

WWW.BRITISHONLY.COM
INFO@BRITISHONLY.COM

Quantity	Part #	Description	Each	Amount

Date _____ / _____ / _____ **Customer #** _____ **Salesperson** _____

Card Number _____ **Expires** _____

Name _____

Address _____

City/State/Zip _____

Phone _____ / _____ **Fax** _____

Email _____

Signature _____

Subtotal	
Insurance	
Shipping	
Total	
Michigan Residents Add 6% Sales Tax	
Amount Enclosed	

FOLD

Name _____

Address _____

City _____

State _____ Zip _____

USE
FIRST CLASS
LETTER
POSTAGE

British Only

MOTORCYCLES AND PARTS INC.

32451 PARKLANE ST
GARDEN CITY, MI 48135 USA

FOLD

British Only

MOTORCYCLES AND PARTS INC.
32451 PARKLANE ST
GARDEN CITY, MI 48135 USA
PHONE: **800-278-6659**
FAX: **734-422-9253**

Year:	Make:	Model:
Engine #		
Frame #		

WWW.BRITISHONLY.COM
INFO@BRITISHONLY.COM

Quantity	Part #	Description	Each	Amount

Date _____ / _____ / _____ **Customer #** _____ **Salesperson** _____

Card Number _____ **Expires** _____

Name _____

Address _____

City/State/Zip _____

Phone _____ / _____ **Fax** _____

Email _____

Signature _____

Subtotal	
Insurance	
Shipping	
Total	
Michigan Residents Add 6% Sales Tax	
Amount Enclosed	

FOLD

Name _____

Address _____

City _____

State _____ Zip _____

USE
FIRST CLASS
LETTER
POSTAGE

British Only

MOTORCYCLES AND PARTS INC.

32451 PARKLANE ST
GARDEN CITY, MI 48135 USA

FOLD